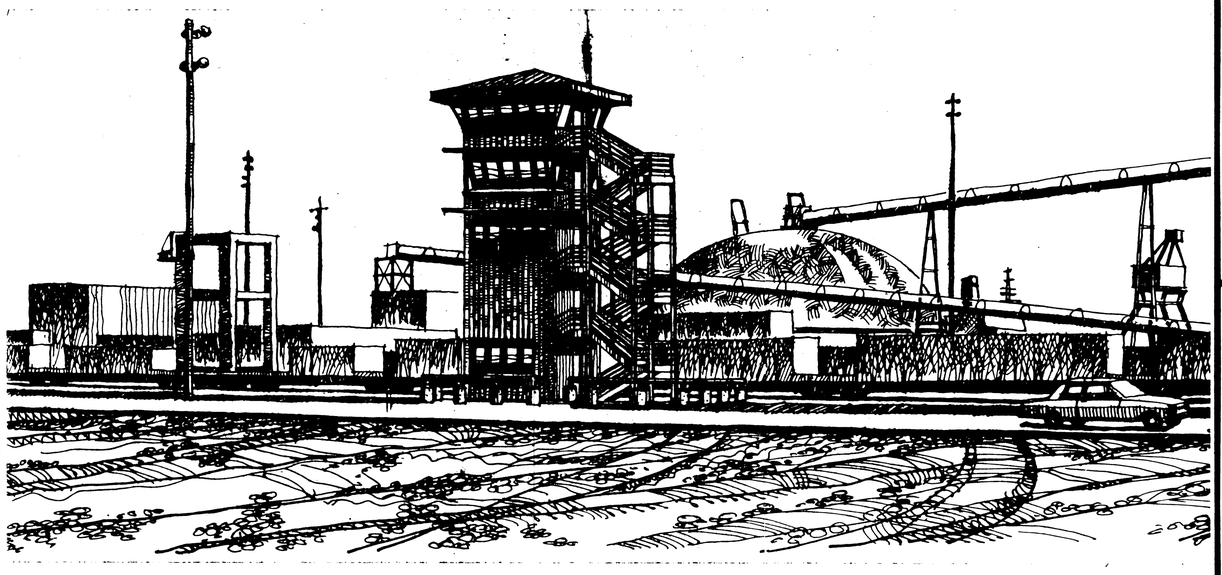

RENDERING SHOWN FOR REFERENCE ONLY. NOT TOTALLY ACCURATE

PERSPECTIVE

GRID LINE
DIMENSION TO FACE
DIMENSION TO GRID OR ℄
BLDG. SECTION
WALL SECTION DETAIL SECTION
INTERIOR ELEVATIONS SHT. A-
WINDOW TYPE
DOOR NO.
DETAIL NO.
AA-NO ADDITIVE ALTERNATE

SYMBOLS

USE:	Control Tower
CODE:	1985 U.B.C.
OCCUPANCY:	B2 (with special provision in Appendix, Division II, Aviation Control Tower)
CONSTRUCTION:	II-1 Hr. Sprinkled
ALLOWABLE AREA:	1,500 s.f./floor x 5 = 7,500
ACTUAL AREA:	484 s.f./floor x 5 = 2,420
ALLOWABLE HEIGHT:	100 feet
ACTUAL HEIGHT:	52 feet
OCCUPANCY LOAD:	Allowable: 15/floor x 5 = 75 Actual: 46+

BUILDING DATA

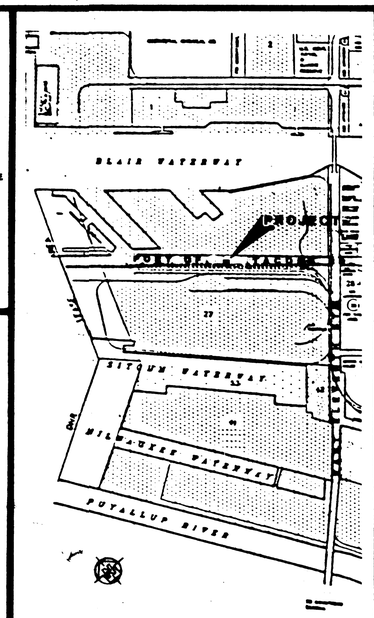

VICINITY MAP

INDEX TO DRAWINGS

ARCHITECTURAL:

A-1 General Information and Site Plan
A-2 Floor Plans
A-3 Reflected Ceiling Plans
A-4 Building Elevations and Sections
Room Finish and Door Schedules
Exterior Finish Schedule
A-5 Wall Sections and Window Types
A-6 Roof Plan and Details
A-7 Interior Elevations
A-8 Casework Details and Parking Layout (AA-I)
A-9 Building Code Requirements Information

STRUCTURAL:

S-1 General Notes and Misc. Details
S-2 Foundation, Floor Framing and Roof Framing Plan

MECHANICAL/ELECTRICAL:

M/E-1 Site Plan, Symbols and Details
M-2 Mechanical Floor Plans
M-3 Mechanical Details
E-2 Floor Plan - Power Signals
E-3 Floor Plan - Lighting
E-4 Electrical Distribution Diagrams and Panel Schedules

NOTE:

The contractor's lay down area is from the nearest railroad track to the existing fence on the other side of the tower (fence is not shown on site plan, but roughly follows the water line shown.) The plan north limit will be the end of track and the plan south limit will be a line 20 feet north of the first light pole.

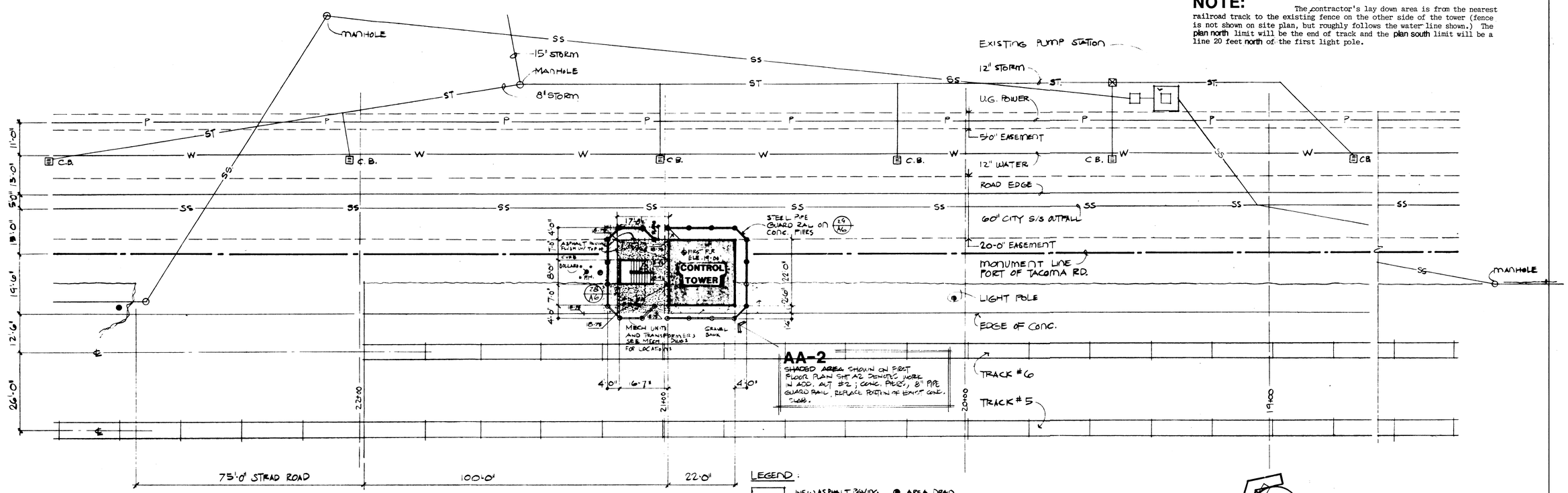

SITE PLAN

1/16" = 1'-0"

SEE SHEET A-8 FOR PARKING LAYOUT (AA-1)

AS-BUILT

PORT OF TACOMA USA

PORT OF TACOMA
P.O. BOX 1837 TACOMA, WASHINGTON 98401
(206)383-5841

CONSULTANTS
RBML
RUE • BUTLER • MARSHALL • LAMB, Architects, PS
members, american institute of architects
732 pacific ave., tacoma, wa 98402 • (206) 383-1011

REGISTERED ARCHITECT THOMAS J. BUTLER STATE OF WASHINGTON

APPROVED
CHIEF ENGINEER — DATE 11/17/88

DRAWN BY	DATE	CHECKED BY	DATE
C.N.T	11-10-87		
AS-BUILT BY	DATE	PROJ.ENGR.	DATE

MARK	REVISION	BY	APP.	DATE

CONTROL TOWER
FOR NORTH INTERMODAL YARD
(SITE PLAN AND INFORMATION)

DRAWING No. EP 4200-4
CONTRACT No. 622B
SHEET No. A1 OF 9

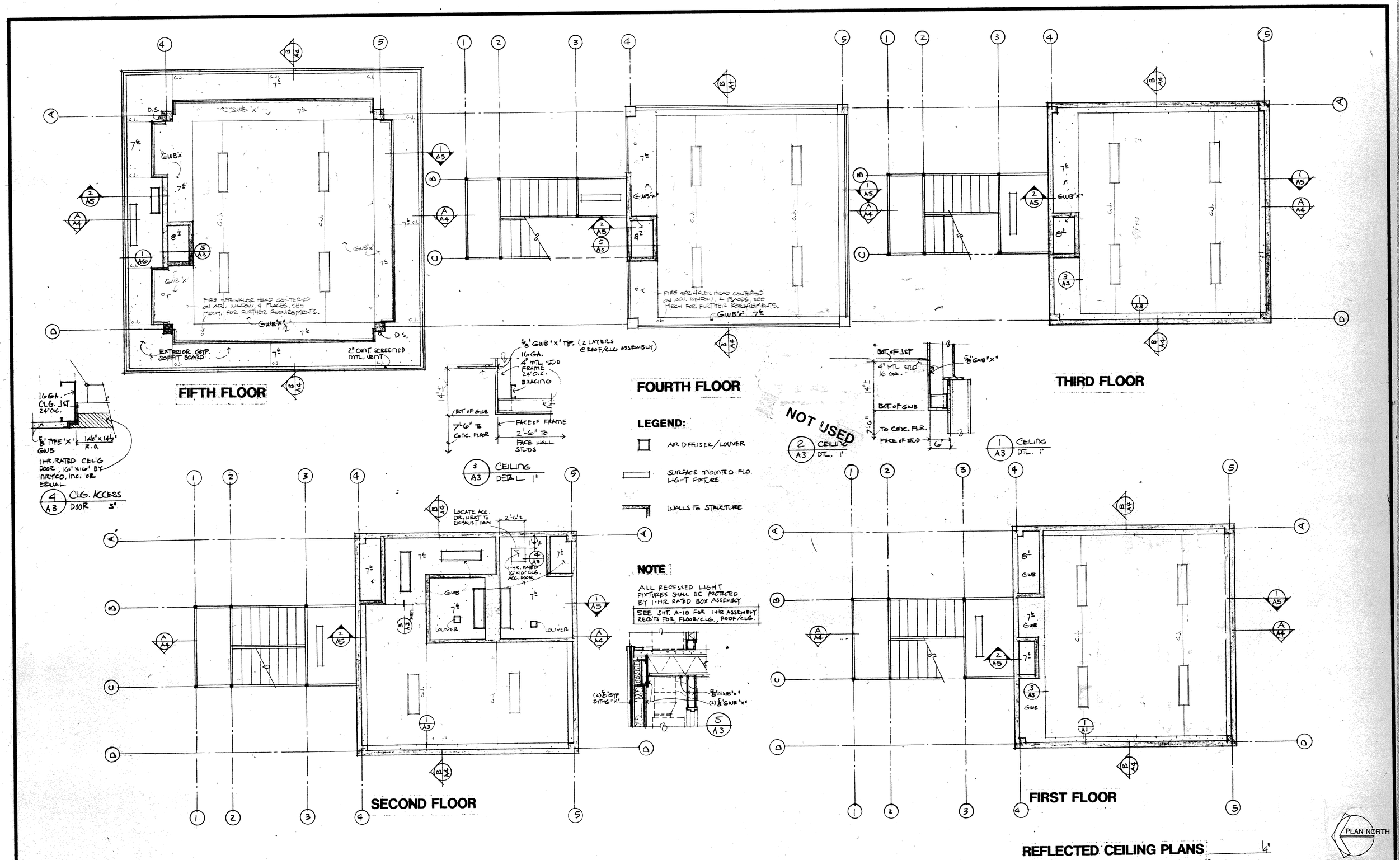

PORT of TACOMA U.S.A. **PORT OF TACOMA** P.O. BOX 1837 TACOMA, WASHINGTON 98401 (206)383-5841	CONSULTANTS **RBML** RUE-BUTLER-MARSHALL-LAMB, Architects, ps members, american institute of architects 732 pacific ave., tacoma, wa 98402 ✆ (206) 383-1011	SEAL REGISTERED ARCHITECT THOMAS J. BUTLER STATE OF WASHINGTON	APPROVED R.L. MacLeod CHIEF ENGINEER 11/17/88 DATE	CMT DRAWN BY 11-10-87 DATE	CHECKED BY DATE	MARK	REVISION	BY	APP.	DATE
				AS-BUILT BY DATE	PROJ.ENGR. DATE					

CONTROL TOWER
FOR NORTH INTERMODAL YARD
(REFLECTED CEILING PLAN)

DRAWING No. EP 4200-4
CONTRACT No. 622B
SHEET No. A3 OF 9

EXTERIOR FINISH SCHEDULE

EXTERIOR BLDG. COMPONENTS	MATERIAL	FINISH	NOTES
ROOF	METAL	F.F.	
GUTTER/FLASHINGS	METAL	FF	
FASCIA	METAL	FF	
SOFFIT	G.S.B.	PT.	
STRIP VENT on SOFFIT	METAL	PT.	MATCH SOFFIT COLOR
WALL	METAL	FF	
EXPOSED DOWNSPOUTS	PVC	PT	MATCH SIDING COLOR
STEEL STAIR	STEEL	PT.	
PIPE RAILGS	STEEL	PT	
PIPE STRUCTURE	STEEL	PT	
EXT DOOR/FRAMES	H.M.	PT	
WINDOW FRAMES	STEEL	FF	
LOUVERS	METAL	PT.	MATCH COLOR SURROUNDING
CONC. BOLLARDS	CONC.	NAT.	

G.S.B. GYPSUM SOFFIT BOARD
H.M. HOLLOW METAL
CONC. CONCRETE
F.F. FACTORY FINISH
PT PAINT
NAT. NATURAL

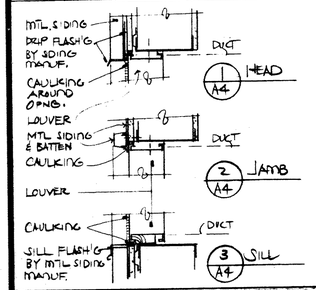

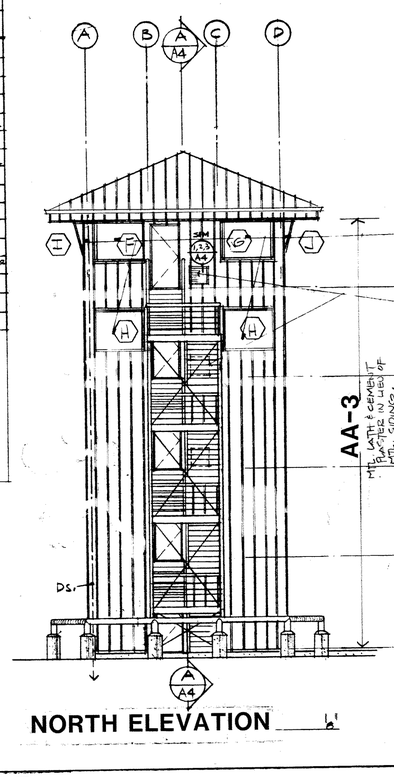

NORTH ELEVATION 1/8"

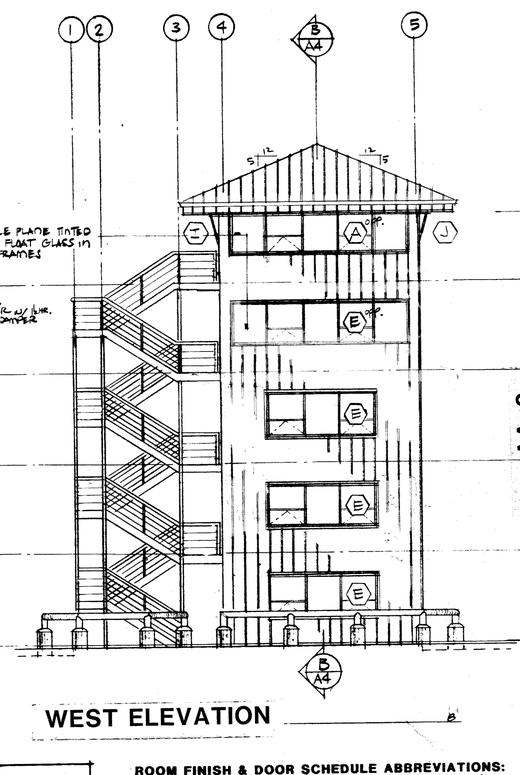

WEST ELEVATION 1/8"

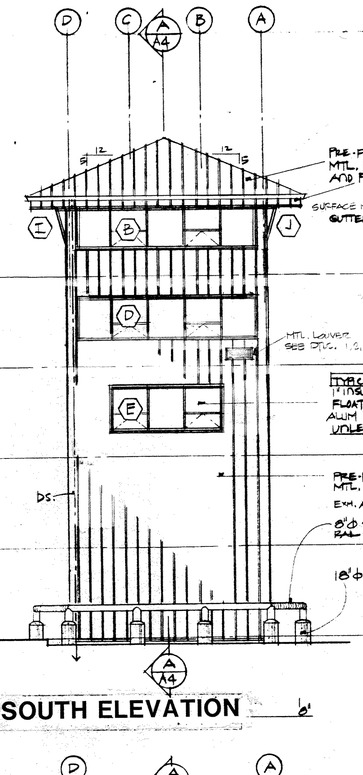

SOUTH ELEVATION 1/8"

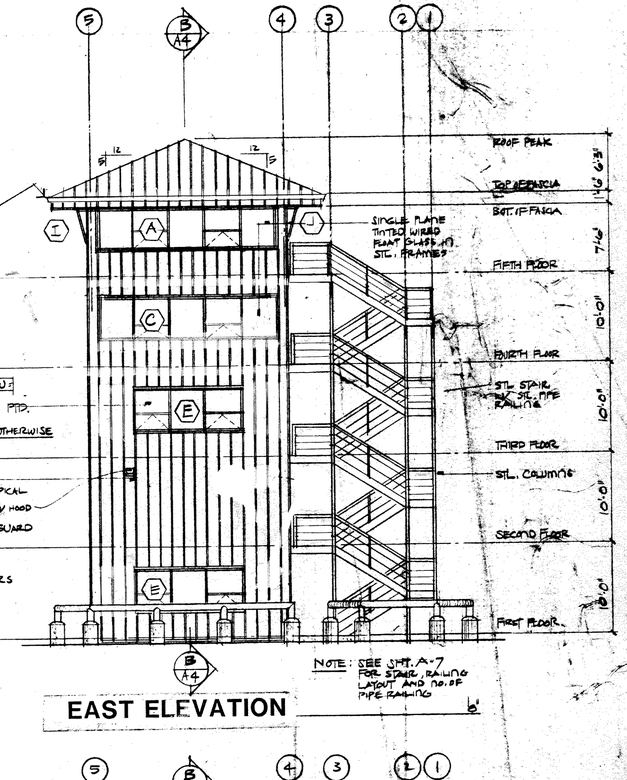

NOTE: SEE SHT. A-7 FOR STAIR, RAILING LAYOUT AND NO. OF PIPE RAILINGS

EAST ELEVATION 1/8"

ROOM FINISH SCHEDULE

NO.	ROOM	FLOOR MTL.	FLOOR FIN.	BASE MTL.	BASE FIN.	NORTH MTL.	NORTH FIN.	EAST MTL.	EAST FIN.	SOUTH MTL.	SOUTH FIN.	WEST MTL.	WEST FIN.	CEILING MTL.	CEILING FIN.	HGT.	NOTES
101	LUNCH	VCT	WAX	RCB	FF	GWB/FRP	PT/FF	GWB/FRP	PT/FF	GWB/FRP	PT/FF	GWB/FRP	PT/FF	GWB	PT.	8'-3"	
102	ELECTRICAL	VCT	WAX	RCB	FF	GWB	PT	GWB	PT	GWB	PT	GWB	PT.	GWB	PT.	7'-6"	
103	MECHANICAL	C.	-	-	-	GWB	-	GWB	-	GWB	-	GWB	-	GWB	-	8'-1"	
201	FUTURE OFFICE	VCT	WAX	RCB	FF	GWB	PT	GWB	PT	GWB	PT	GWB	PT	GWB	PT	8'-3"	
202	CORRIDOR	VCT	WAX	RCB	FF	GWB	PT	GWB	PT	-	-	GWB	PT	GWB	PT	7'-6"	
203	CORRIDOR	VCT.	WAX	RCB	FF	GWB	PT	GWB	PT	GWB	PT	GWB	PT	GWB	PT	7'-6"	
204	WOMEN	C.T.	FF	CT	FF	GWB/FRP	PT/FF	GWB/FRP	PT/FF	GWB/FRP	PT/FF	GWB/FRP	PT/FF	GWB	PT	7'-6"	
205	MEN	C.T	FF	CT	FF	GWB/FRP	PT/FF	GWB/FRP	PT/FF	GWB/FRP	PT/FF	GWB/FRP	PT/FF	GWB	PT	7'-6"	
206	CLOSET	VCT	WAX	RCB	FF	GWB	PT	GWB	PT	GWB	PT	GWB	PT	GWB	PT	7'-6"	
207	MECHANICAL	C	-	-	-	GWB	-	GWB	-	GWB	-	GWB	-	GWB	-	7'-6"	
301	FUTURE OFFICE	VCT	WAX	RCB	FF	GWB	PT	GWB	PT	GWB	PT	GWB	PT	GWB	PT	8'-3"	
302	MECHANICAL	C.	-	-	-	GWB	-	GWB	-	GWB	-	GWB	-	GWB	-	8'-1"	
401	OBSERVATION	CPT.	FF	RCB	FF	GWB	PT	GWB	PT	GWB	PT	GWB	PT	GWB	PT	8'-3"	
402	MECHANICAL	C	-	-	-	GWB	-	GWB	-	GWB	-	GWB	-	GWB	-	8'-7"	
501	OBSERVATION	VCT	WAX	RCB	FF	GWB	PT	GWB	PT	GWB	PT	GWB	PT	GWB	PT	8'-3"	
502	MECHANICAL	C	-	-	-	GWB	-	GWB	-	GWB	-	GWB	-	GWB	-	8'-7"	

ROOM FINISH & DOOR SCHEDULE ABBREVIATIONS:

MTL. - MATERIAL
C. CONCRETE
C.T. CERAMIC TILE
CPT. CARPET
FRP FIBERGLAS REINFORCED PLASTIC BOARD
GWB GYPSUM WALL BOARD
RCB RUBBER COVE BASE
S.AC SUSPENDED ACOUSTICAL CEILING
VCT VINYL COMPOSITION TILE

FIN. - FINISH
FF FACTORY FINISH
PT PAINT (SEE SPECS.)

DOOR / FRAME
H.M. HOLLOW METAL
MAT. MATERIAL
HDW. HARDWARE
GRP GROUP
THR. THRESHOLD
WD. WOOD
PR. PAIR

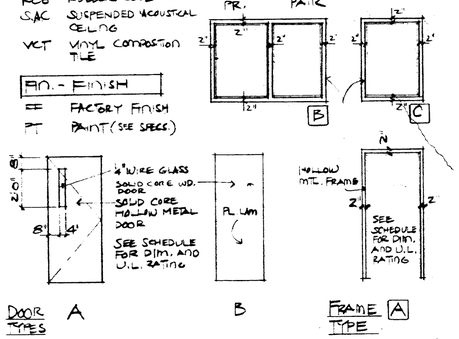

DOOR SCHEDULE

DOOR NO.	SIZE	DOOR TYPE	DOOR MAT.	FRAME TYPE	FRAME MAT.	FRAME DETAILS HEAD	FRAME DETAILS JAMB	FRAME DETAILS THR.	HDW GRP.	UL LABEL	REMARK
101A	3'-0" x 7'-0" x 1 3/4"	A	HM.	A	HM.	21/A6	22/A6	23/A6	1	1 1/2 HR.	
102A	2'-6 x 7'-0" x 1 3/4"	B	WD.	A	HM.	24/A6	25/A6	-	2	1 HR	
103A	2'-8" x 5'-3" x 1 3/4" PR.	B	WD.	B	HM.	24/A6	25/A6	24/A6	3	-	
201A	3'-0" x 7'-0" x 1 3/4"	A	HM.	A	HM.	21/A6	23/A6	23/A6	4	1 1/2 HR	
204A	2'-8" x 7'-0" x 1 3/4"	B	WD.	A	HM.	24/A6	25/A6	-	5	-	
205A	2'-8" x 7'-0" x 1 3/4"	B	WD.	A	HM.	24/A6	25/A6	-	5	-	
206A	2'-6" x 7'-0" x 1 3/4"	B	WD	A	HM.	24/A6	25/A6	-	6	-	
207A	3'-0" x 5'-3" x 1 3/4"	B	WD.	C	HM.	24/A6	25/A6	24/A6	2	-	
301A	3'-0" x 7'-0" x 1 3/4"	A	HM.	A	HM.	21/A6	22/A6	23/A6	4	1 1/2 HR.	
302A	3'-0" x 5'-3" x 1 3/4"	B	WD	C	HM.	24/A6	25/A6	24/A6	7	-	
401A	3'-0" x 7'-0" x 1 3/4"	A	HM.	A	HM.	21/A6	22/A6	23/A6	4	1 1/2 HR.	
402A	3'-0" x 5'-3" x 1 3/4"	B	WD	C	HM.	24/A6	25/A6	24/A6	7	-	
501A	3'-0" x 7'-0" x 1 3/4"	A	HM.	A	HM.	21/A6	22/A6	23/A6	4	1 1/2 HR	
502A	3'-0" x 5'-8" x 1 3/4"	B	WD.	C	HM.	24/A6	25/A6	24/A6	7	-	

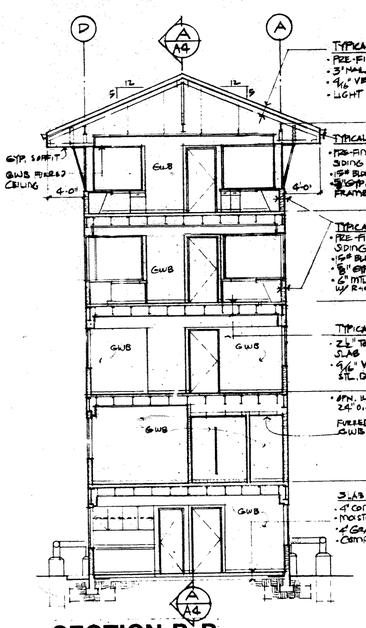

SECTION B-B

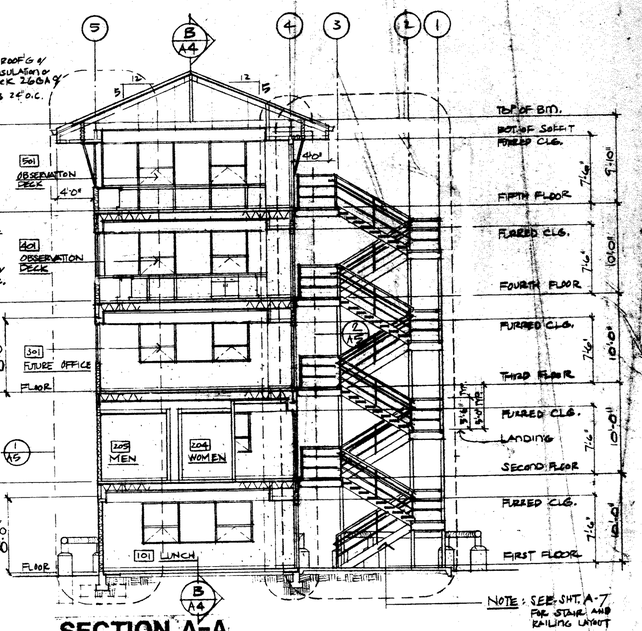

NOTE: SEE SHT. A-7 FOR STAIR AND RAILING LAYOUT

SECTION A-A

BUILDING SECTIONS 1/8"

PORT of TACOMA U.S.A.
PORT OF TACOMA
P.O. BOX 1837 TACOMA, WASHINGTON 98401
(206)383-5841

CONSULTANTS
RBML
RUE • BUTLER • MARSHALL • LAMB, Architects, PS
members, american institute of architects
732 pacific ave., tacoma, wa 98402 ● (206) 383-1011

SEAL
THOMAS J. BUTLER
STATE OF WASHINGTON

APPROVED
R.P. MacLeod
CHIEF ENGINEER
11/17/88
DATE

CNT	11-10-87	DRAWN BY / DATE
		AS-BUILT BY / DATE
		CHECKED BY / DATE
		PROJ. ENGR. / DATE

MARK	REVISION	BY	APP.	DATE

CONTROL TOWER
FOR NORTH INTERMODAL YARD
(BUILDING ELEVATIONS/SECTIONS/SCHEDULES)

DRAWING No. EP 4200-4
CONTRACT No. 622B
SHEET No. A4 OF 9

NOTE: ALL FACTORY PAINTED STL. WINDOW FRAMES & TUBE STEEL FRAME MEMBERS SHOWN SHADED.

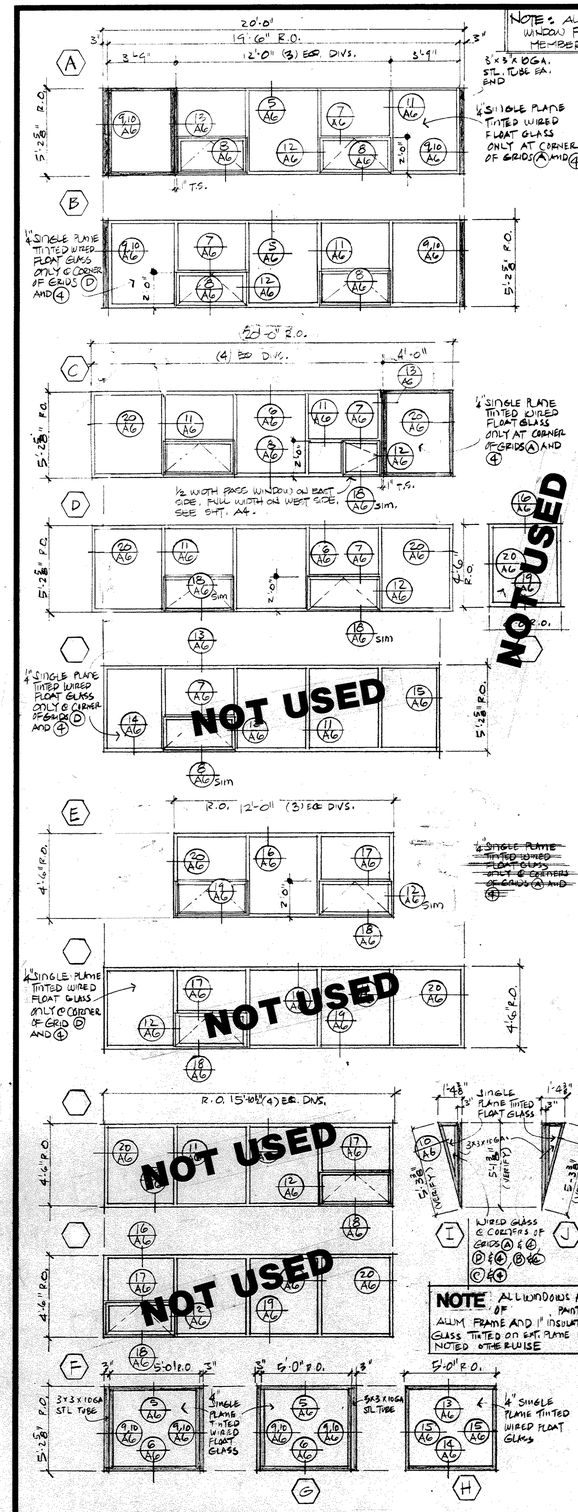

WINDOW TYPES

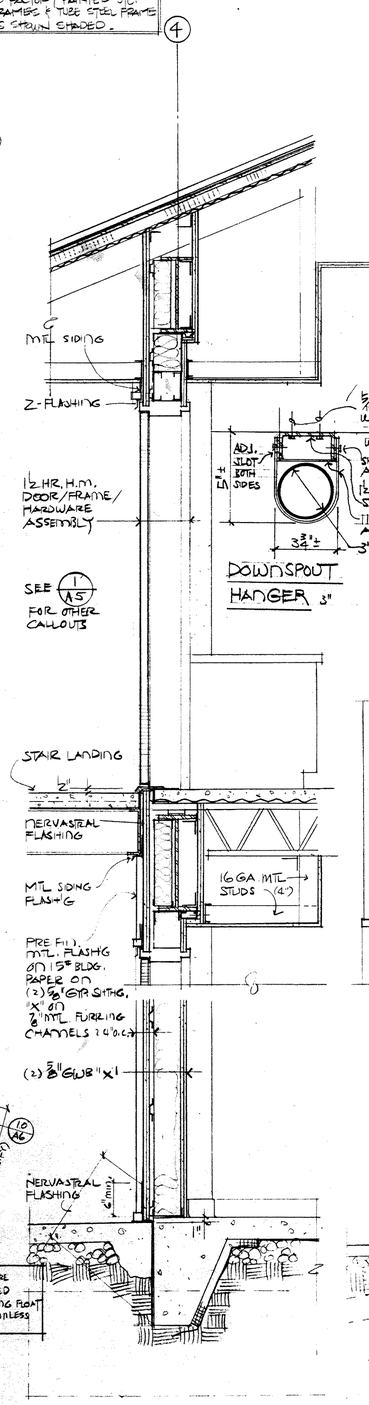

2 WALL SECTION 3/4"

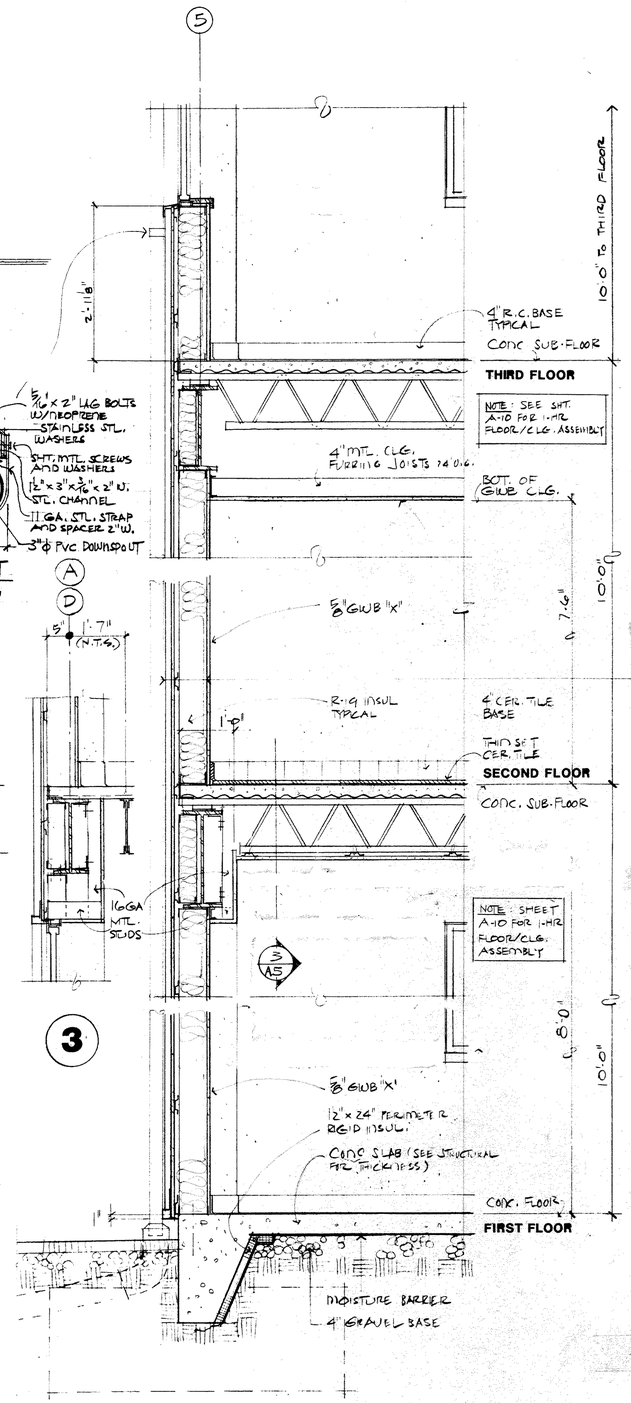

1 WALL SECTION 3/4"

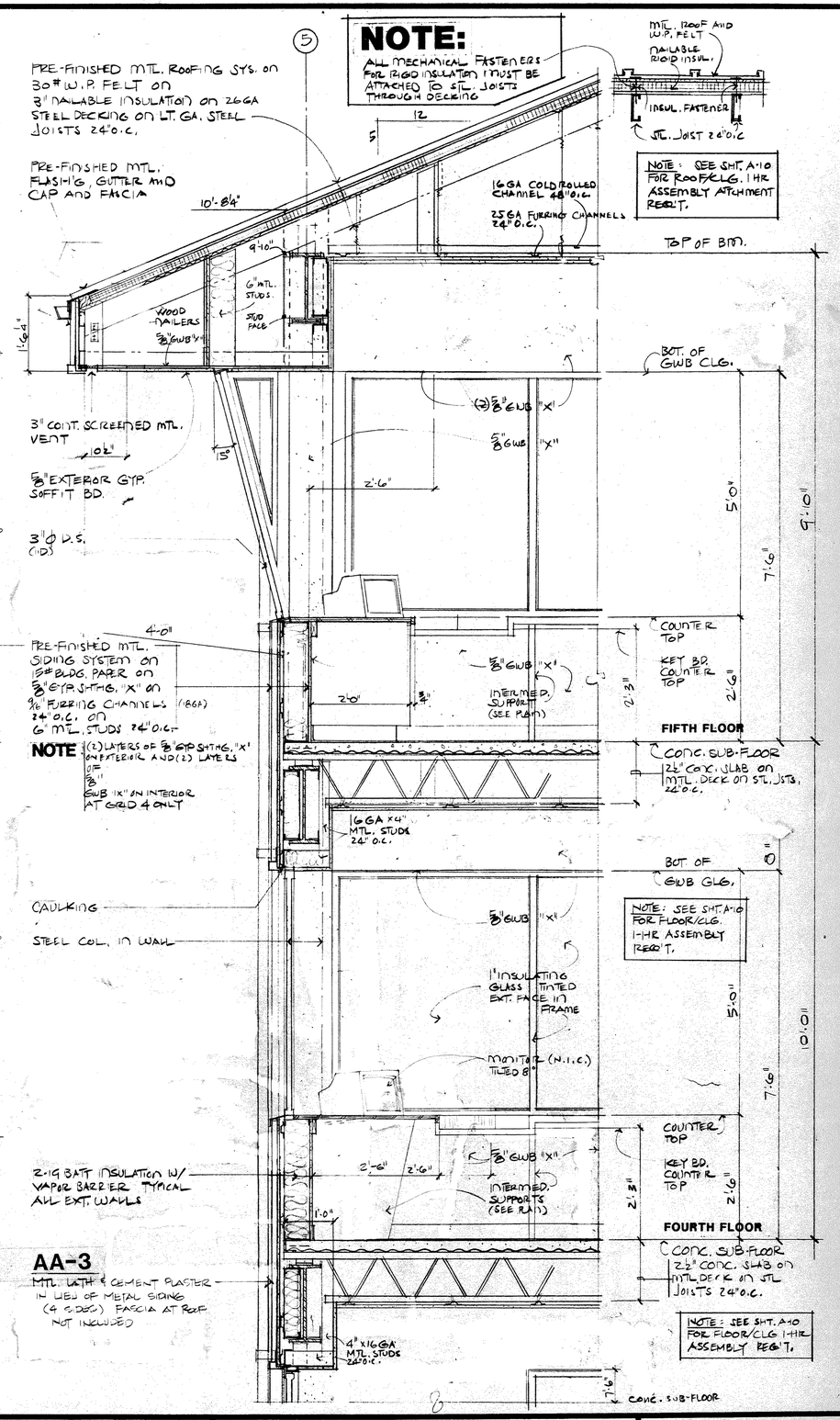

PORT of TACOMA U.S.A.

PORT OF TACOMA
P.O. BOX 1837 TACOMA, WASHINGTON 98401
(206) 383-5841

CONSULTANTS
RBML
RUE • BUTLER • MARSHALL • LAMB, Architects, PS
members, american institute of architects
732 pacific ave., tacoma, wa 98402 • (206) 383-1011

SEAL
REGISTERED ARCHITECT THOMAS J. BUTLER STATE OF WASHINGTON

APPROVED
R.L. MacLeod
CHIEF ENGINEER — DATE 11/17/88

DRAWN BY	DATE	CHECKED BY	DATE
CLT	11-10-87		
AS-BUILT BY	DATE	PROJ. ENGR.	DATE

MARK	REVISION	BY	APP.	DATE

CONTROL TOWER
FOR NORTH INTERMODAL YARD
(WALL SECTIONS AND WINDOW TYPES)

DRAWING No. EP 4200-4
CONTRACT No. 622B
SHEET No. A5 OF 9

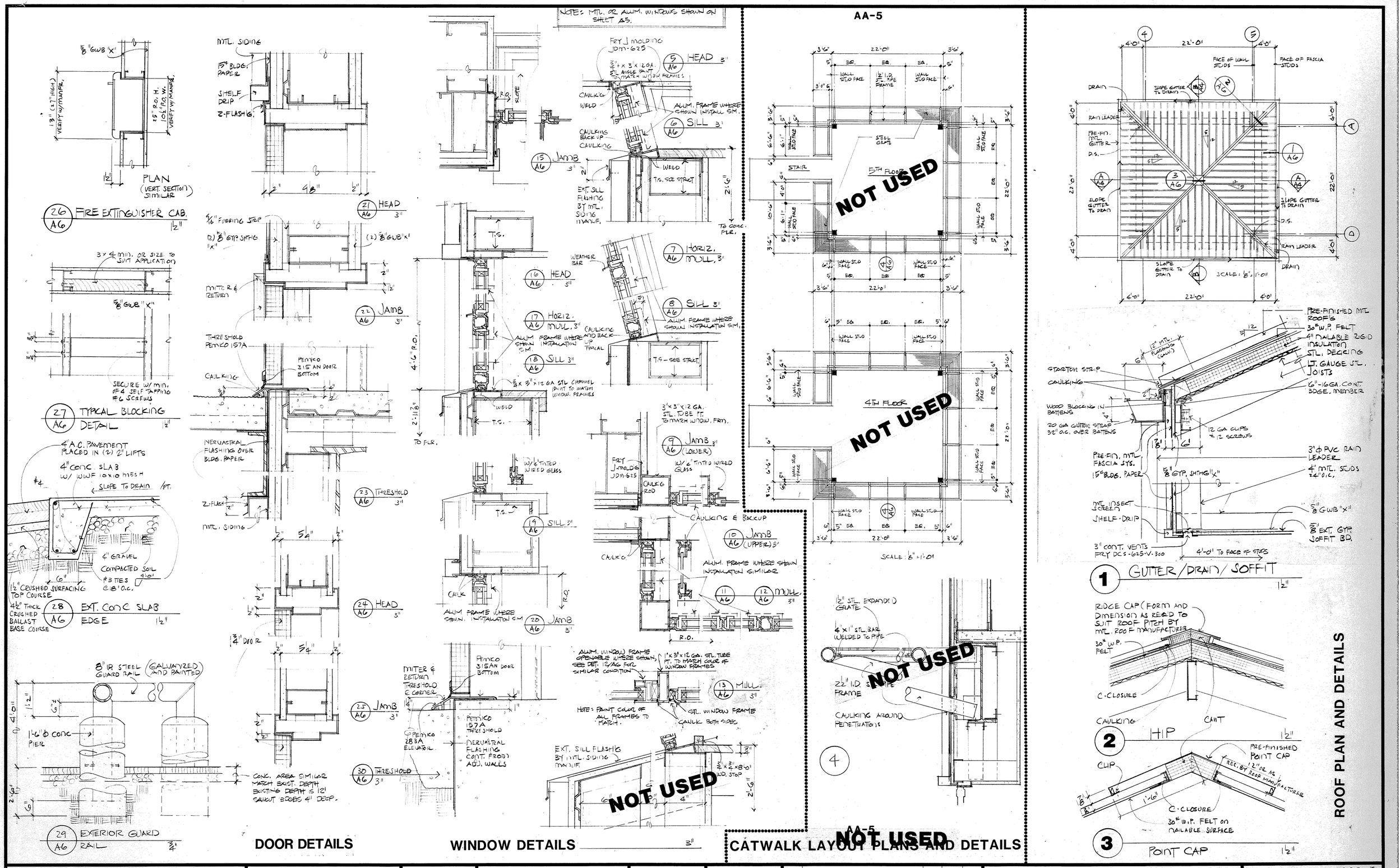

PORT of TACOMA U.S.A.

PORT OF TACOMA
P.O. BOX 1837 TACOMA, WASHINGTON 98401
(206)383-5841

CONSULTANTS
RBML
RUE • BUTLER • MARSHALL • LAMB, Architects, PS
members, american institute of architects
732 pacific ave., tacoma, wa 98402 • (206) 383-1011

SEAL

APPROVED
CHIEF ENGINEER — DATE 11/17/88

DRAWN BY	DATE 11-10-87	CHECKED BY	DATE
AS-BUILT BY	DATE	PROJ.ENGR.	DATE

MARK	REVISION	BY	APP.	DATE

CONTROL TOWER
FOR NORTH INTERMODAL YARD
(ROOF PLAN AND DETAILS)

DRAWING No. EP 4200-4
CONTRACT No. 622B
SHEET No. A6 OF 9

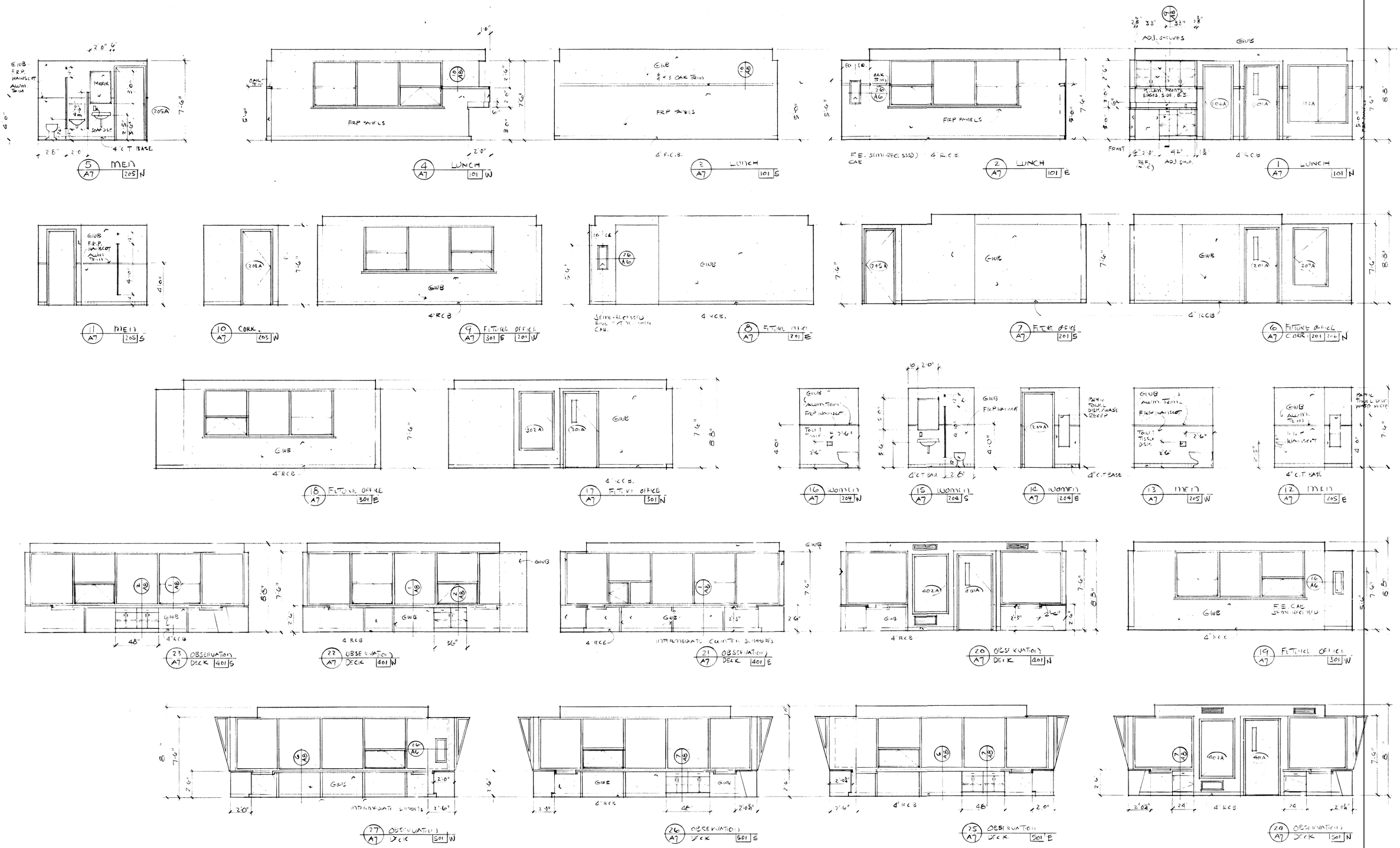

INTERIOR ELEVATIONS

PORT of TACOMA U.S.A.

PORT OF TACOMA
P.O. BOX 1837 TACOMA, WASHINGTON 98401
(206)383-5841

CONSULTANTS
RBML
RUE • BUTLER • MARSHALL • LAMB, Architects, PS
members, american institute of architects
732 pacific ave., tacoma, wa 98402 ● (206) 383-1011

SEAL

APPROVED
CHIEF ENGINEER — DATE 12/2/87

DRAWN BY	DATE	CHECKED BY	DATE
RBML	11-10-87	C WASSEN	—
AS-BUILT BY	DATE	PROJ.ENGR.	DATE

MARK	REVISION	BY	APP.	DATE
	AS-BUILT REVISIONS BY RAML	—	—	—

CONTROL TOWER
FOR NORTH INTERMODAL YARD
(INTERIOR ELEVATIONS)

DRAWING No. EP 4200-4
CONTRACT No. 622B
SHEET No. A7 OF 9

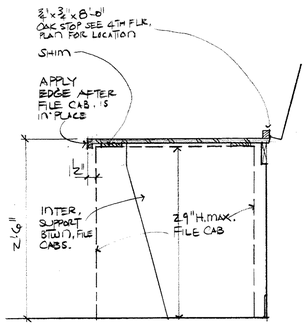

5 / A8 AT FILE CABS. 1"

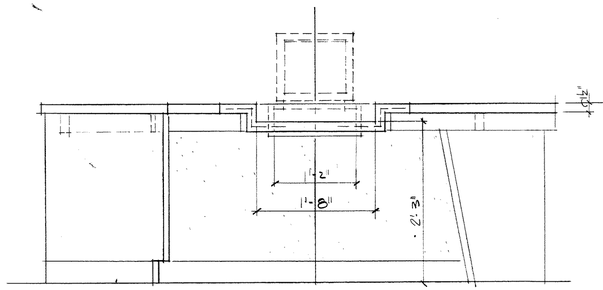

4 / A8 CORNER ELEVATION 1"

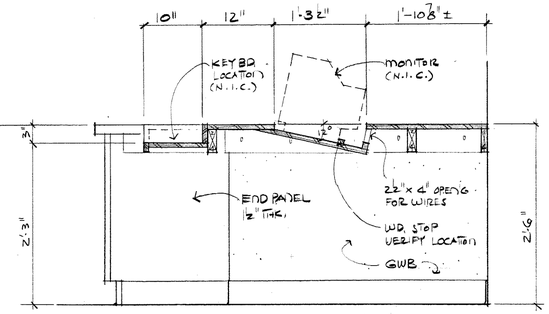

3 / A8 SECTION THROUGH CORNER COUNTER 1"

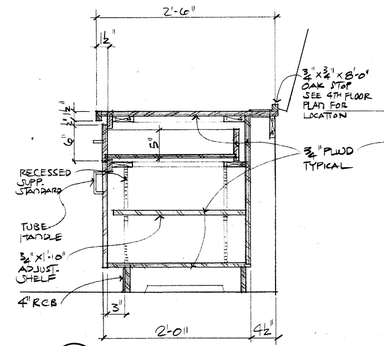

2 / A8 TYP. BASE CAB. SECTION 1"

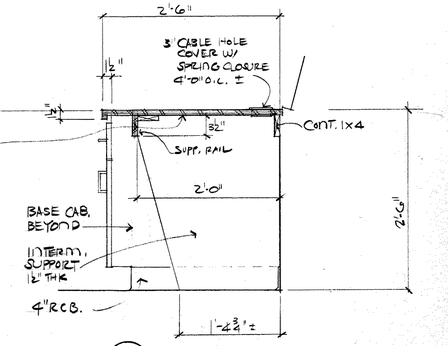

1 / A8 TYP. COUNTER SECTION 1"

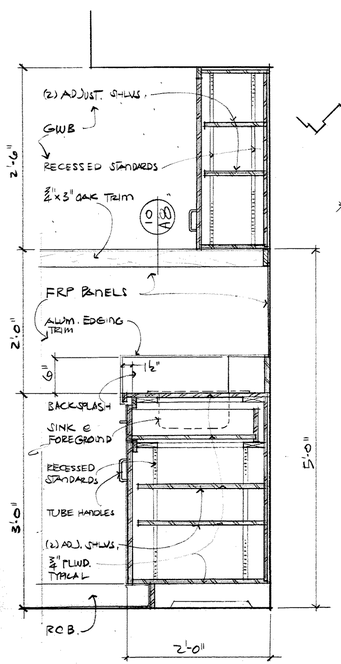

9 / A8 UPPER & LOWER CAB. IN LUNCH RM. (1ST FLOOR)

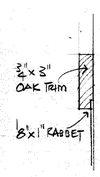

10 / A8

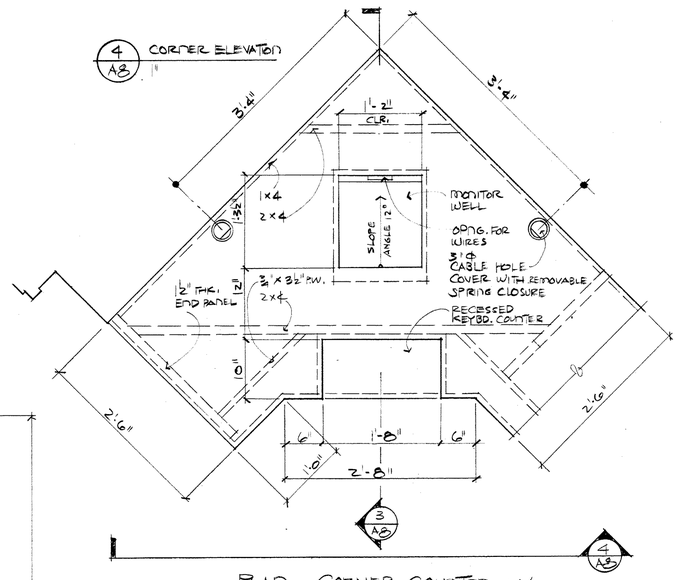

PLAN - CORNER COUNTER W/ COMPUTER MONITOR & KEYBD LAYOUT AT 4TH FLOOR 1"

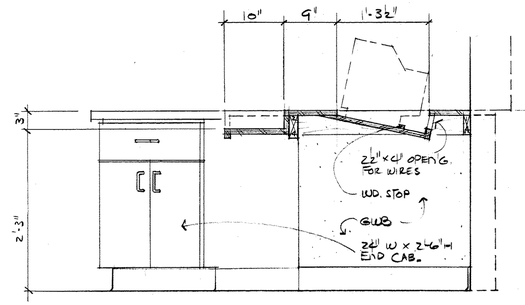

8 / A8 SECTION THROUGH CORNER COUNTER 1"

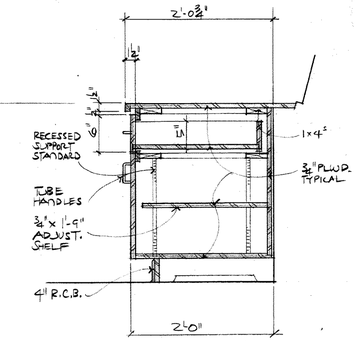

7 / A8 TYP. BASE CAB. SECTION

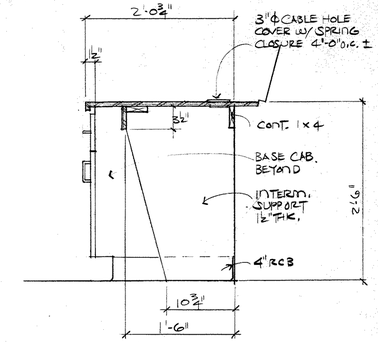

6 / A8 TYP. COUNTER SECTION 1"

NOTE

CABINET FINISH: PLASTIC LAMINATE @ BACK SPLASH (ALL EDGES), TOP, SIDES, EDGES, ALL FRONTS (INCLUDING SUPPORTING RAIL FRONT), AND ALL EXPOSED SURFACES. PLASTIC LAMINATE TOP AND FRONT EDGE OF SHELVES (INCLUDING BOTTOM SURFACE AND EDGE OF CAB.)

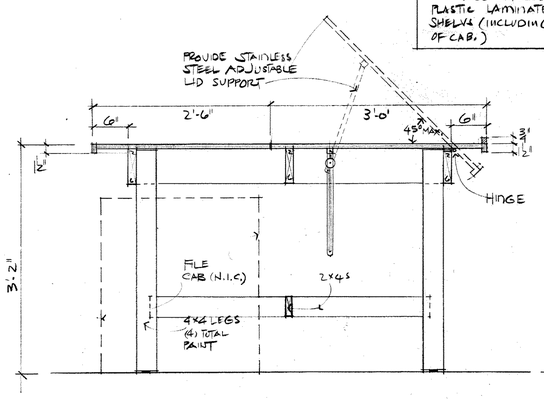

11 / A8 CENTER TABLE @ 5TH FLOOR 1"

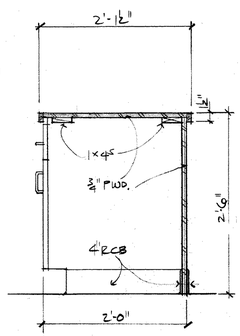

12 / A8 CENTER CAB. @ 4TH FLR 1"

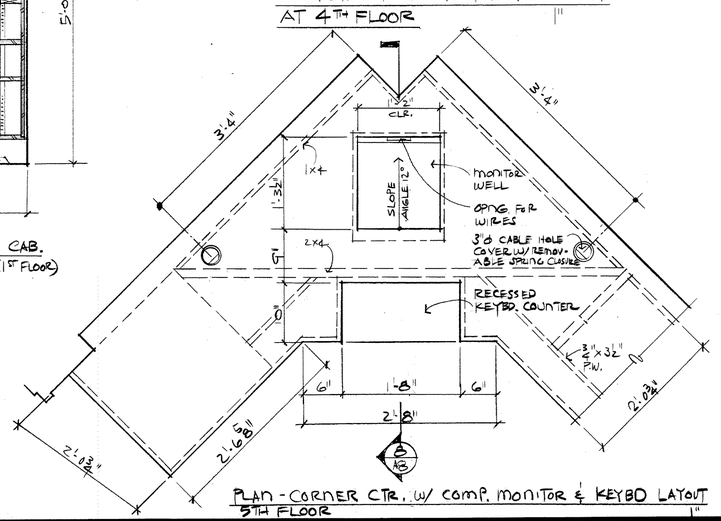

PLAN - CORNER CTR. W/ COMP. MONITOR & KEYBD LAYOUT 5TH FLOOR 1"

AA-1

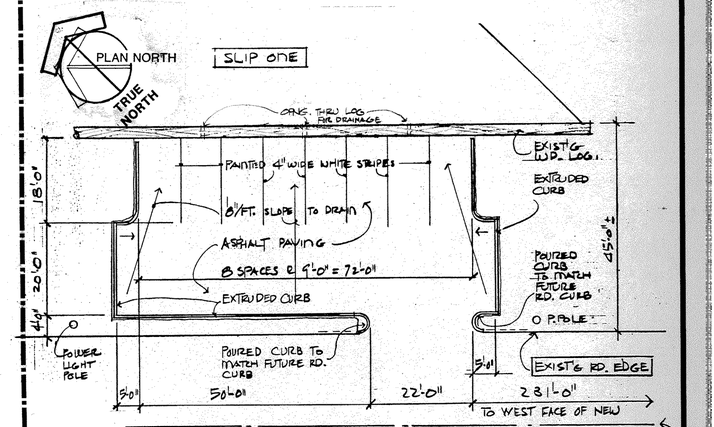

PARKING LAYOUT 1/16" = 1'-0"

PORT of TACOMA
P.O. BOX 1837 TACOMA, WASHINGTON 98401
(206) 383-5841

CONSULTANTS
RBML
RUE • BUTLER • MARSHALL • LAMB, Architects, PS
members, american institute of architects
732 pacific ave., tacoma, wa 98402 • (206) 383-1011

SEAL: REGISTERED ARCHITECT THOMAS J. BUTLER STATE OF WASHINGTON

APPROVED
R. L. MacLeod — CHIEF ENGINEER — 11/17/88 DATE

CNT. DRAWN BY	11-10-87 DATE	CHECKED BY	DATE
AS-BUILT BY	DATE	PROJ. ENGR.	DATE

MARK	REVISION	BY	APP.	DATE

CONTROL TOWER
FOR NORTH INTERMODAL YARD
(CASEWORK DETAILS AND PARKING LAYOUT)

DRAWING No. EP 4200-4
CONTRACT No. 622B
SHEET No. A8 OF 9

TWO LAYERS ½" GYPSUM WALLBOARD (glue-on)

Wallboard is applied without horizontal joints. Adhesive is to be an approved adhesive qualified under U.B.C. Standard No. 43-1.

References:
1985 U.B.C., Table 43A; Item No. 20

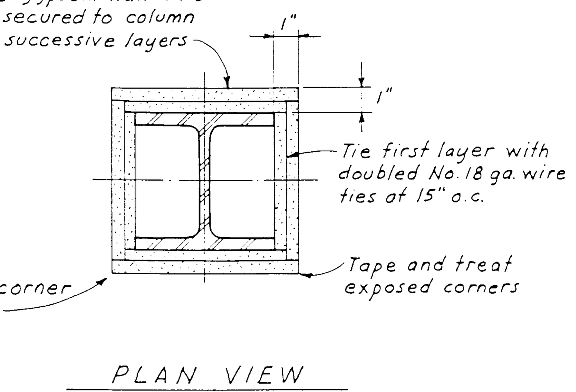

Fig. S1-9

1-HR. COLUMN ASSEMBLY

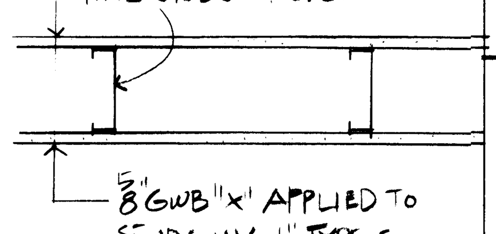

5/8" GWB "X" APPLIED TO STUDS W/ 1" TYPE S DRYWALL SCREWS 8" O.C TO VERT. EDGES 12" O.C TO TOP & BOTTOM RUNNERS AND INTER. STUDS. STAGGER ALL VERT. & HORIZ. JOINTS 24" O.C. EA. SIDE AND OPP. SIDES

INTERIOR GA WP1200

5/8" GYP. SHTHG TYPE "X" APPLIED TO 9/16" x 18 GA FURRING CHANNELS 24" O.C. W/ 1" S-12 DRYWALL SCREW @ EDGES AND CENTER ROW 12" O.C. END JOINTS BLOCKED W/ CHANNELS.

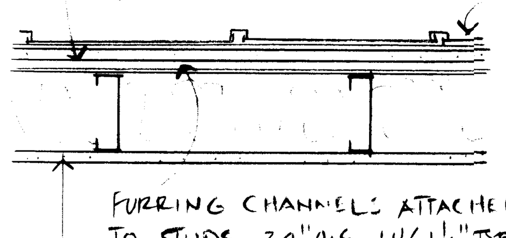

FURRING CHANNELS ATTACHED TO STUDS 24" O.C W/ 1¼" TYPE S-12 DRYWALL SCREWS. (OR AS REQ'D BY CHANNELS MANUFACTURER)

5/8" GWB "X" APPLIED @ RIGHT ANGLES, SEE ABOVE INT. WALL FOR ATTACHMENT REQ'TS

EXTERIOR SIMILAR TO GA WP 3240
GA WP 1200

1-HR WALL ASSEMBLY

SIMILAR TO INTERIOR SIDE EXCEPT FACE LAYER TO BE 5/8" GYP. SHTHG "X" AND ATTACHED W/ 2" S-12 DRYWALL SCREW 12" O.C. TO FURRING CHANNELS (24" O.C) THRU BASE LAYER.

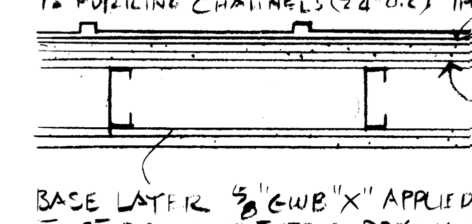

BASE LAYER 5/8" GWB "X" APPLIED TO STUDS W/ 1" TYPE S DRYWALL SCREWS 24" O.C. SCREWS SPACED ½" FROM VERT. END JOINTS AND ¾" FROM HORIZONTAL EDGE JOINTS, FACE LAYER 5/8" GWB "X" APPLIED AT RIGHT ANGLE W/ 1 5/8" TYPE S DRYWALL SCREWS 12" O.C. SCREWS SPACED ½" FROM VERT. END JOINTS AND 1" FROM HORIZ. EDGE JOINTS. STAGGER JOINTS 24" O.C. EA. LAYER AND SIDE.

2-HR WALL ASSEMBLY (EXTERIOR) (GA WP 1548) sim.

FC 1105	**Construction Type: Gypsum Wallboard, Steel Joists, Concrete Slab** ½" type X gypsum wallboard or veneer base applied at right angles to 3⅝" steel studs spaced 24" o.c. with 1" type S drywall screws 12" o.c. Studs wire tired with double strand 18 gage wire 8'0" o.c. to steel joists spaced 24" o.c. supporting ⅜" rib metal lath and 2½" concrete slab. (One hour restrained and unrestrained.)	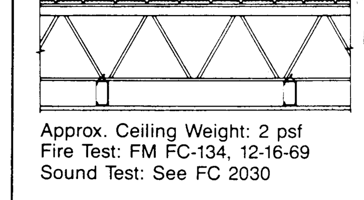 Approx. Ceiling Weight: 2 psf Fire Test: FM FC-134, 12-16-69 Sound Test: See FC 2030
FC 1110	**Construction Type: Gypsum Wallboard, Steel Joists, Concrete Slab** ½" type X gypsum wallboard or veneer base applied at right angles to rigid furring channels 24" o.c. with 1" type S drywall screws 12" o.c. in field. Wallboard end joints located midway between continuous channels and attached to additional pieces of channel 54" long with screws 8" o.c. Furring channels wire-tied 24" o.c. to open web steel joists supporting ⅜" rib metal lath or 9/16" deep 28 gage corrugated steel and 2" concrete slab measured from top of flute. (Passed 90 minute fire test restrained and unrestrained)	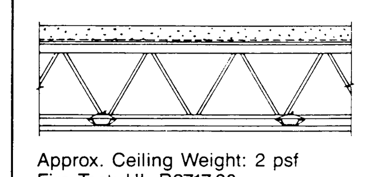 Approx. Ceiling Weight: 2 psf Fire Test: UL R2717-30 Design G502, 6-12-64

(AS OCCURS) SEE G243 FOR REQUIRED DAMPERS

FLOOR / CEILING 1-HR. ASSEMBLY NO SCALE

12. **Acoustical Material***—Nom 24 by 48 in. or 20 by 60 in. lay-in panels. Border panels supported at walls by min 0.016 in. thick (26 MSG) painted-steel angle with 1 in. legs; or, min 0.016 in. thick (26 MSG) painted-steel channel, 1 5/8 in. deep with 1/2 in. top flange and 1 in. bottom flange. (S)=surface perforations.
Armstrong World Industries, Inc.—Type 1/2, 5/8 or 3/4 in. Type P (S).
13. **Hold-Down Clips**—(Not illustrated)—No. 30 MSG spring steel, placed over cross tees 2 ft O.C.
14. **Accessible Hold-Down Tab**—(Not illustrated)—Min 0.020 in. thick (24 gauge) painted-steel, 5/8 in. long, 3/8 in. deep, top flange 1/2 in. wide. To be used on each access panel in ceiling.
15. **Accessible Hold-Down Spline**—(Not illustrated)—Min 0.016 in. thick (26 gauge) steel, 7 in. long channels, 5/8 in. deep, with 3/8 in. top flange and 5/8 in. bottom flange. To be used on each access panel in ceiling.
16. **Mineral and Fiber Boards***—(Optional, not shown) —Applied over concrete floor with no limit on overall thickness. When the insulation is used, the Restrained and Unrestrained Assembly and Unrestrained Beam Ratings are 1 ½ hr.
See Mineral and Fiber Board (CERZ) category for names of manufacturers.
17. **Roof Covering**—(Not shown, for use with insulation described in Item 16.)—Class A, B, or C **Built-Up Roof Covering Materials*** consisting only of felt and asphalt (or coal tar pitch) materials in alternate layers. See Building Materials Directory.
*Bearing the UL Classification Marking

* 2½" CONC MEASURED TO BOT OF STL. DECK WAS ALLOWED BY TACOMA BLDG. OFFICIAL TAKING INTO CONSIDERATION OF 1-HR ONLY REQ'T., THE FACT THAT IT IS FULLY SPRINKLED, AND THAT IT IS NOT A BLDG. TO BE USED BY THE PUBLIC

FLOOR/CEILING 1-HR. ASSEMBLY WITH GWB CEILING

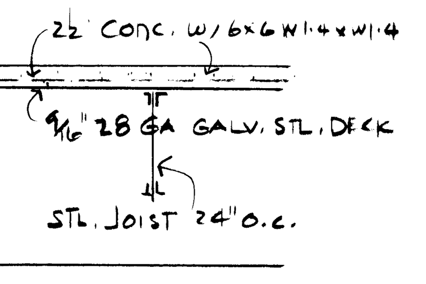

Design No. P516
Unrestrained Assembly Rating—1 Hr
Unrestrained Beam Rating—1 Hr

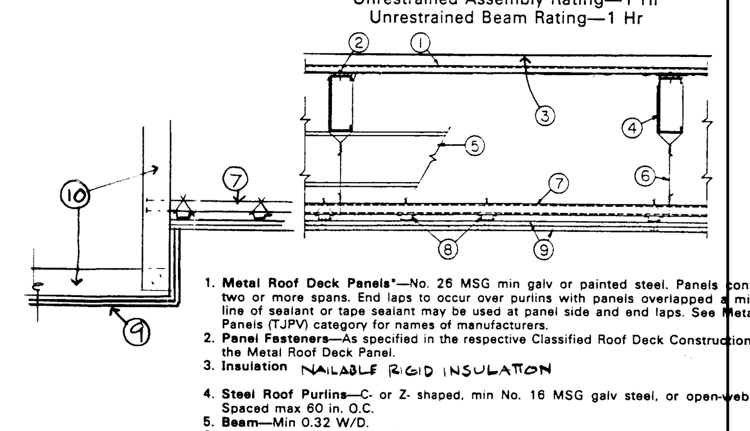

1. **Metal Roof Deck Panels***—No. 26 MSG min galv or painted steel. Panels continuous over two or more spans. End laps to occur over purlins with panels overlapped a min of 4 in. A line of sealant or tape sealant may be used at panel side and end laps. See Metal Roof Deck Panels (TJPV) category for names of manufacturers.
2. **Panel Fasteners**—As specified in the respective Classified Roof Deck Construction Number for the Metal Roof Deck Panel.
3. **Insulation** NAILABLE RIGID INSULATION
4. **Steel Roof Purlins**—C- or Z- shaped, min No. 16 MSG galv steel, or open-web steel joists. Spaced max 60 in. O.C.
5. **Beam**—Min 0.32 W/D.
6. **Hanger Wire**—No. 12 SWG or heavier galv steel wire; twist-tied to steel roof purlins or joists. Hanger wire attachment spaced not over 48 in. O.C. along cold-rolled channel and located at ends of the cold-rolled channels at walls.
7. **Cold-Rolled Channel**—Min No. 16 MSG galv or painted steel channels, 1-1/2 or 2 in. deep with 9/16 in. flanges. Spaced a max of 48 in. O.C.
8. **Furring Channel**—No. 25 MSG galv steel, 2-5/8 in. wide, 7/8 in. deep, spaced 24 in. O.C. perpendicular to cold-rolled channels; secured to each runner channel with double strand of No. 18 SWG galv steel wire.
9. **Wallboard, Gypsum***—Any 5/8 in. thick gypsum wallboard bearing the UL Classification Marking as to Fire Resistance. Two layers of 5/8 in. thick by 48 in. wide sheets installed with long dimension perpendicular to the furring channels. Inner layer attached to furring channels using 1-1/4 in. long Type S bugle-head steel screws spaced 8 in. O.C. along butted end joints and 12 in. O.C. in the field of the board. Butted end joints to occur midway between continuous furring channels and to be backed by joint backer channel which extends 6 in. beyond both ends of the end joint. Butted end joints to be offset a min of 32 in. in adjacent courses. Outer layer attached to the furring channels through inner layer using 1-7/8 in. long Type S bugle-head steel screws spaced 8 in. O.C. at butted joints and 12 in. O.C. in the field. Butted end joints to be centered over continuous furring channels and be offset a min of 8 in. from end joints of inner layer. Butted side joints of outer layer to be offset a min of 18 in. from butted side joints of inner layer.
See Wallboard, Gypsum (CKNX) category for names of manufacturers.
*Bearing the UL Classification Marking

10. 16 GA 4" GALV. STEEL 24" O.C.

ROOF/CEILING 1-HR. ASSEMBLY

NO SCALE

SEE WALL SECTION ON SHT A-5

Design No. G243
Restrained Assembly Ratings—1½ or 2 Hr. (See Item 16)
Unrestrained Assembly Ratings—1½ or 2 Hr. (See Item 16)
Unrestrained Beam Ratings 1½ or 2 Hr. (See Item 16)

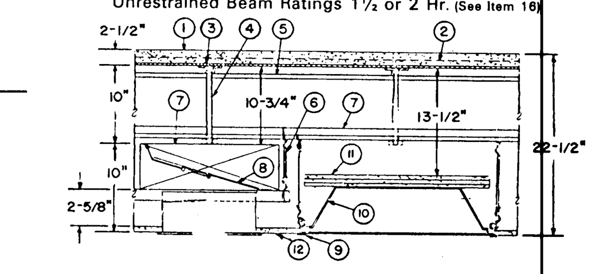

Beam - (Not shown) - W6X12 or W8X10 min. size.
1. **Normal-Weight Concrete**—Carbonate aggregate, 147 +or- 3 pcf unit weight, 3000 psi compressive strength.
2. **Welded Wire Fabric**—6x6—W1.4xW1.4.
3. **Metal Lath**—3/8 in. rib, 3.4 lb/sq yd expanded steel; tied to each joist at every other rib, and midway between joists at side lap with 18 SWG galv steel wire. As an alternate, the form material for the concrete may be corrugated steel deck, 9/16 in. deep, of min 0.016 in. thick (28 gauge) galv steel welded to supports 15 in. O.C. using welding washers. When corrugated steel deck is substituted for metal lath, the concrete thickness shall be measured from the surface of the concrete to the top of steel deck corrugations. *
4. **Steel Joists**—Type 10J3 min size; spaced 24 in. in O.C., welded to end supports.
4A. (Not Shown)—As an alternate to items 2, 3, 4 and 5, the following components may be used:
(1) **Welded Wire Fabric—6x6—W2.0xW2.0.**
(2) **Structural Steel Members***—Hambro joists, min nom depth 10 in.; when hanger wires are suspended from joists and bottom chord or cold rolled channels, max spacing 49 1/4 in. O.C. Greater joist spacing may be used when hanger clips (Item 6A) are used for supporting the ceiling.
Canam-Hambro, Div. of Canam Steel Corp. —Type D500. The concrete is cast on removable plywood form. Min concrete slab thickness for use with Item 4A is 3 1/4 in.
4B. (Not shown)—As an alternate to items 2, 3, 4, 4A and 5, the following components may be used:
(1) **Welded Wire Fabric**—Reinforcement as per ACI latest specification, without accounting for the steel deck.
(2) **Structural Steel Members***—Vescom Composite joists, min nom depth 10 in.; when hanger wires are suspended from joists' bottom chord or cold-rolled channels, max spacing 48 in. O.C. Greater joist spacing may be used when hanger clips (Item 6A) are used for supporting the ceiling.
Vescom Structural Systems, Inc. —Type V.
(3) **Steel Form Units**—Min 1-5/16 in. deep corrugated steel, 24 min gauge, welded to supports 15 in. O.C. using welding washers. The steel deck may be painted, galvanized or uncoated.
(4) Min concrete slab topping thickness, measured from the top plane of the steel form units shall be 2-5/16 in.
5. **Bridging**—Steel bars, 1/2 in. diam, welded to top and bottom chord of each joist.
6. **Hanger Wire**—No. 12 SWG galv steel, tied to lower chord of steel joists or to 1-1/2 in. deep, min 0.053 in. thick (16 gauge) cold-rolled steel channels. When the ceiling is composed of nom 24 by 48 in. lay-in panels, hanger wires spaced 48 in. O.C. along main runners with additional wires to occur at all four corners of light fixtures, at midspan of cross tees adjacent to light fixtures and air duct outlets, and adjacent to main runner splices. When the ceiling is composed of nom 20 by 60 in. lay-in panels, hanger wires spaced 40 in. O.C. along main runners, at all four corners of light fixtures, at the midspan of all cross tees, and adjacent to main runner splices. When Type D500 or Type V joists (Item 4 or 4A) are used, the hanger wires may be tied to the joists' bottom chord to 1-1/2 in., No 16 gauge cold rolled channels which are placed on top of joist bottom chord and tied thereto, or to hanger clips (Item 6A).
6A. **Hanger Clips**—For use with Type D500 (Item 4A) and Type V (Item 4B) joist, as an alternate method for support of hanger wires. Galv steel angles, 3/4 in. long 3/32 in. thick with 1-1/8 in. horizontal and 7/8 in. vertical legs. Vertical leg provided with a 5/16 in. diam hole to accomodate hanger wire. Horizontal leg provided with a 3/16 in diam hole for insertion of fastener. Hanger clip secured to underside of concrete floor (Item 4A) or through the crest of the form units into the concrete (Item 4B), using nominal 1-3/8 in. long, 0.145 in. diam shank with 0.300 in. diam head, power-driven galv-steel fastener.
7. **Air Duct**—Min 0.023 in. thick (24 gauge) galv steel. Total area of duct openings not to exceed 57 sq in. per each 100 sq ft of ceiling area. Area of ind duct opening not to exceed 113 sq in. Max dimension of opening 12 in. Duct supported by 1 1/2 in. 16 MSG painted steel channels spaced 43 in. O.C. suspended by 12 SWG galv steel wire. As an alternate rigid **Air Duct Materials*** may be used. The duct outlet throat is positioned at the center of a 24 in. long, min 0.029 in. thick (22 gauge) galv steel duct liner. The throat is insulated with 1 in. thick, 5 pcf density rigid round glass-fiber material. These ducts are supported by min 0.053 in. thick (16 gauge) cold-rolled steel channels suspended by 12 SWG galv steel wire. Channels are spaced, directly below the steel duct liner one on each side of the throat, 72 in. O.C. for ducts up to 36 in. wide and 48 in. O.C. for ducts between 36 and 60 in. wide.
Manville Building Materials Corp.—Rigid, Class I.
Owens-Corning Fiberglass Corp.—Rigid, Class I.
8. **Damper**—Min. 0.020 in. thick (25 gauge) galv steel. Protected on both surfaces with 1/16 in. ceramic fiber paper and held open with a **Fusible Link** (Bearing the UL Listing Mark). Damper to overlap duct outlet 1 in. min.
In lieu of the dampers described above, Duct Outlet Protection System A, as described in the Design Information Section, may be used with steel ducts.
9. **Steel Framing Members***—Main runners and cross tees in combinations listed below:
A. Main runners nom 12 ft long spaced 48 in. O.C. Cross tees nom 4 ft long installed perpendicular to main runners and spaced 24 in. O.C.—For 24 by 48 in. lay-in panels.
Chicago Metallic Corp.—Types 250, 850, 1850.
Donn Corp.—Types DXL, XD.
National Rolling Mills Inc.—Types FG, FST-6000, -6000A, -8000, 8000A, MLFR-6000. For Type MLFR-6000 system hanger wires required at grid intersections on both sides of each main runner splice (24 in. O.C. max).
B. Main runners nom 10 ft long spaced 60 in. O.C. Cross tees nom 5 ft long installed perpendicular to main runners and spaced 20 in. O.C.—For 20 by 60 in. lay-in panels.
Chicago Metallic Corp.—Types 250, 850, 1850.
Donn Corp.—Type DXL.
9A. **Steel Framing Members***—**Metal pans**—(Not shown) (Optional)—Channel-shaped metal pans, various colors and finishes, installed perpendicular to cross tees or main runners and spaced 4 in. O.C. The flange edges of the metal pan engage and interlock with the vertical tabs of the Type 1652 and Type 1654 (See Item 9B) grid adapters. End laps joints of the metal pans shall occur adjacent to main runners or cross tees. The metal pans shall each be supported by at least two main runners or cross tees. (CMC Cat. Nos. 1510 and 1610).
Chicago Metallic Corp.—Type 1650.
9B. **Steel Framing Members***—**Grid adapter**—(Not shown) (Optional)—For use with Type 1650 metal pans (See Item 9A). Angle-shaped adapter with a looped return flange; installed parallel to cross tees or main runners by engaging return flange of adapter to the flange of the cross tee or main runner. Type 1654 is intended for use with cross tees. Type 1652 is intended for use with main runners. (CMC Cat. Nos 1652 and 1654).
Chicago Metallic Corp.—Type 1650.
9C. **Steel Framing Members***—**Filler strips**—(Not shown) (Optional)—For use with Type 1652 or 1654 grid adapters (See Item 9B). Channel-shaped metal pans, 0.18 to .024 in. thick, steel or aluminum ¼ in. deep and 21/32 in. wide, placed with the painted side down in the cut-outs of the grid adapters adjacent to the vertical tab. (CMC Cat. Nos. 1532 and 1632).
Chicago Metallic Corp.—Type 1650.
10. **Fixtures, Recessed Light**—(Bearing the UL Listing Mark). Fluorescent lamp type, steel housing, 2 by 4 ft or 20 by 60 in. size. Fixtures spaced so their area does not exceed 16 sq ft per 100 sq ft of ceiling area. When nom 20 by 60 in. fixtures are used, fixture stabilizers (Item 10A) shall be used in addition to hanger wire at midspan of the 5 ft long cross tees. Wired in conformance with the National Electrical Code.
Fixture Stabilizer—(Not Shown)—Required for use with 20 by 60 in. size fixtures [illegible] used and only for 20 by 60 in. size fixtures when metal pans are not used. One per fixture assembly. No. 16 MSG painted steel channel formed as a yoke, secured to the web at mid-span of cross tee on each side of fixture.
11. **Fixture Protection—Acoustical Material***—Same as Item 12. One 24 by 48 by ½ in. panel placed over each fixture, supported at each end of fixture by a 24 by 1 in. thick noncombustible spacer so as to provide a 1 in. clearance between the fixture and the panel.
11A. **Fixture Stabilizer**—(Not shown)—Alternate to Item 10A.—Min. 0.020 in. thick (25 MSG) painted steel spacer bar formed as an angle with 1 in. legs and hemmed edges and slots perpendicular to and near the ends of the spacer bar for engaging over the bulb of the tees. Installed at fixture mid-length on each side of fixture by engaging over the cross tee bulb adjacent to the fixture with the opposite end engaged over the bulb of the second cross tee from the fixture.

PORT OF TACOMA P.O. BOX 1837 TACOMA, WASHINGTON 98401 (206)383-5841	CONSULTANTS RBML RUE • BUTLER • MARSHALL • LAMB, Architects, PS members, american institute of architects 732 pacific ave., tacoma, wa 98402 • (206) 383-1011	SEAL 2226 REGISTERED ARCHITECT THOMAS J. BUTLER STATE OF WASHINGTON	APPROVED R K MacLeod 12/2/87 CHIEF ENGINEER DATE

CUT	11-30-87	
DRAWN BY	DATE	
		CHECKED BY DATE
		C. WASEEN -
AS-BUILT BY	DATE	PROJ.ENGR. DATE

MARK	REVISION	BY	APP.	DATE
	NO AS BUILT REVISIONS	-	-	-

CONTROL TOWER
FOR NORTH INTERMODAL YARD
BUILDING CODE REQUIREMENTS INFORMATION

DRAWING No. EP 4200-4
CONTRACT No. 622B
SHEET No. A9 OF 9

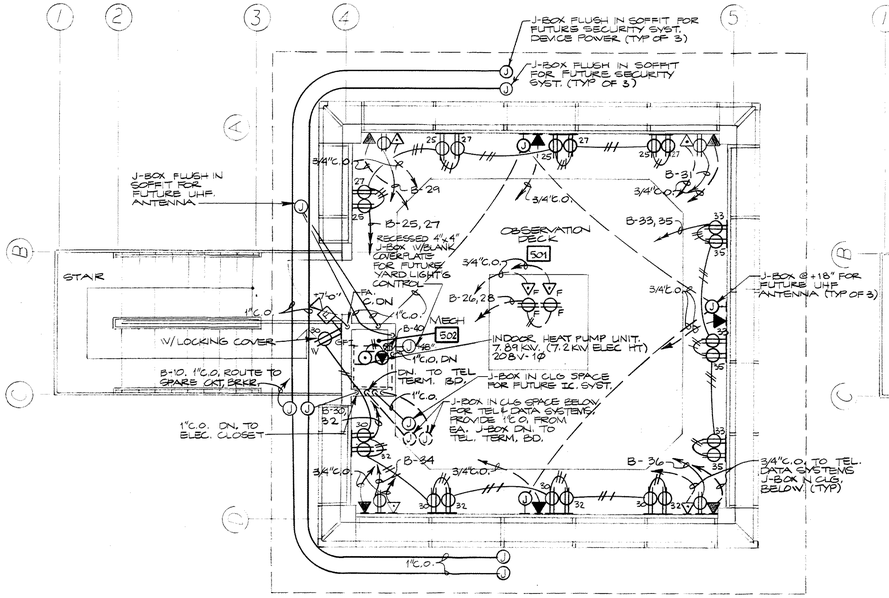

FIFTH FLOOR PLAN – POWER & SIGNAL

SCALE: 1/4" = 1'-0"

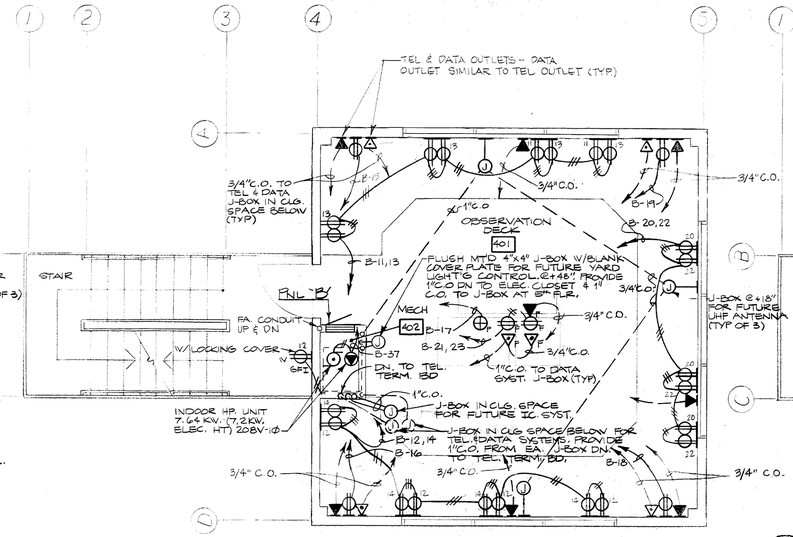

FOURTH FLOOR PLAN – POWER & SIGNAL

SCALE: 1/4" = 1'-0"

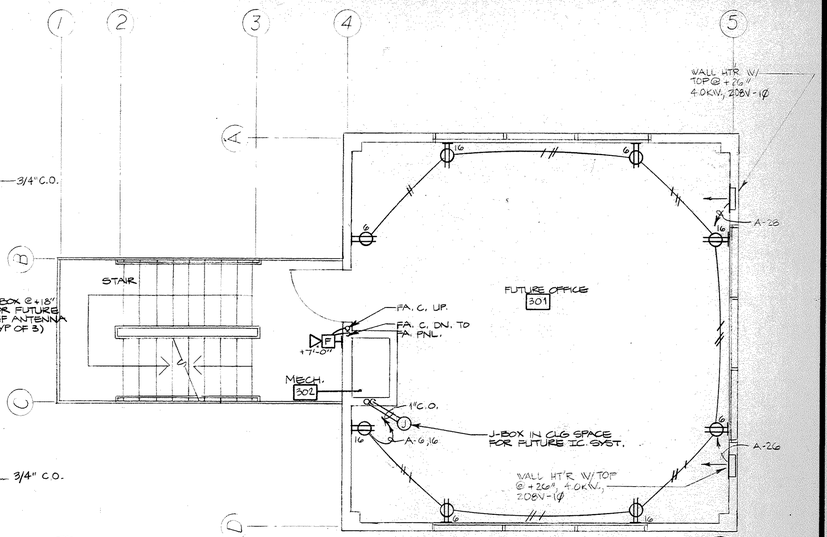

THIRD FLOOR PLAN – POWER & SIGNAL

SCALE: 1/4" = 1'-0"

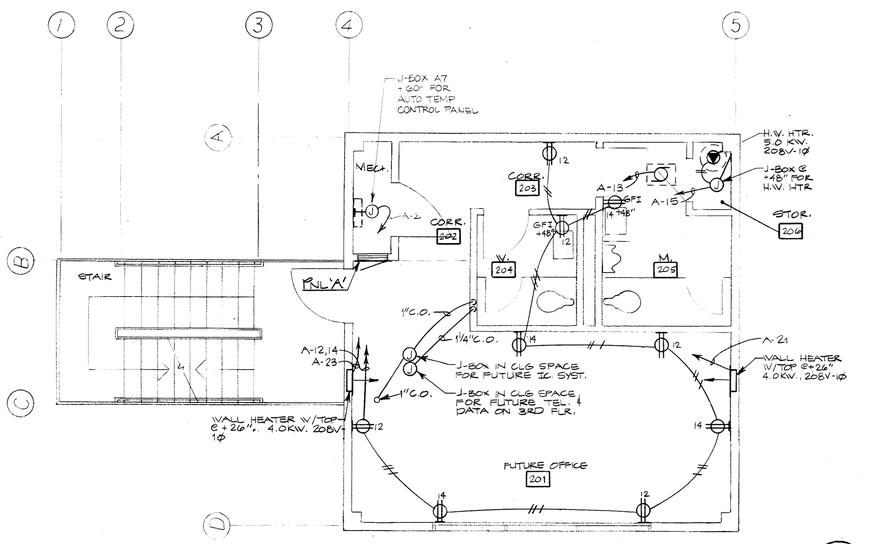

SECOND FLOOR PLAN – POWER & SIGNAL

SCALE: 1/4" = 1'-0"

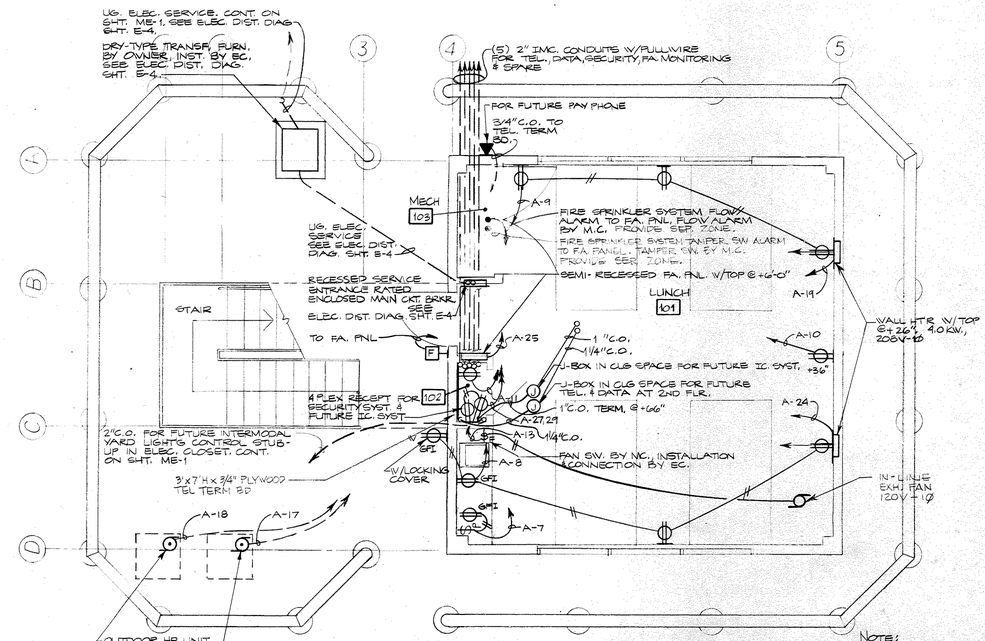

FIRST FLOOR PLAN – POWER & SIGNAL

SCALE: 1/4" = 1'-0"

NOTE:
EC. SHALL STUB ALL SPARE OR FUTURE SYSTEM CONDUITS A MIN. OF 6" ABV. FIN. FLR. OR 12" BELOW C.L.G. IN ELEC. CLOSET, #102 UL AS INDICATED.

PORT of TACOMA U.S.A. **PORT OF TACOMA** P.O. BOX 1837 TACOMA, WASHINGTON 98401 (206)383-5841	CONSULTANTS RBML RUE • BUTLER • MARSHALL • LAMB, Architects, PS members, american institute of architects 732 pacific ave., tacoma, wa 98402 • (206) 383-1011	SEAL ALAN F. CLEVEN PROFESSIONAL ENGINEER	APPROVED R.J. MacLeod CHIEF ENGINEER 11/17/88 DATE	DRAWN BY DATE / AS-BUILT BY DATE	CHECKED BY DATE / PROJ.ENGR. DATE	MARK	REVISION	BY	APP.	DATE	**CONTROL TOWER** FOR NORTH INTERMODAL YARD POWER & SIGNAL PLANS	DRAWING No. EP 4200-4 CONTRACT No. 622B SHEET No. E-2 OF 6

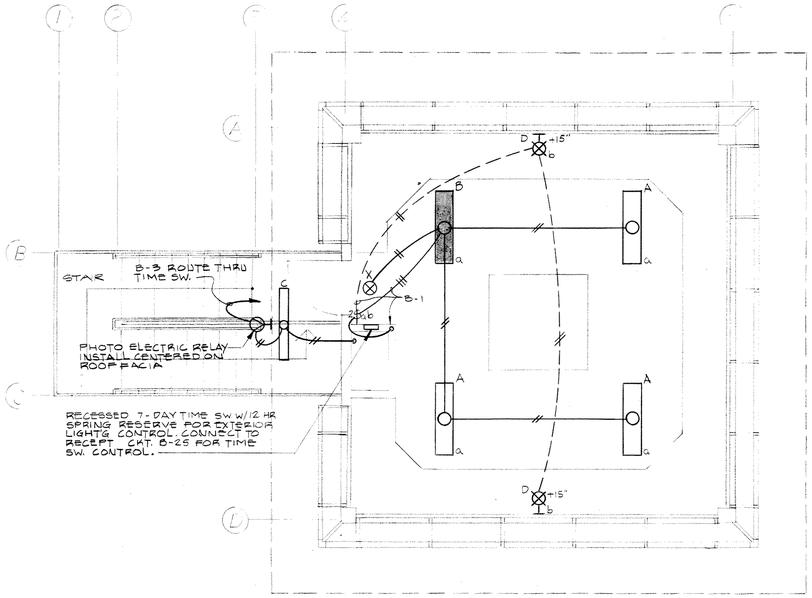

FIFTH FLOOR PLAN – LIGHTING

SCALE: 1/4" = 1'-0"

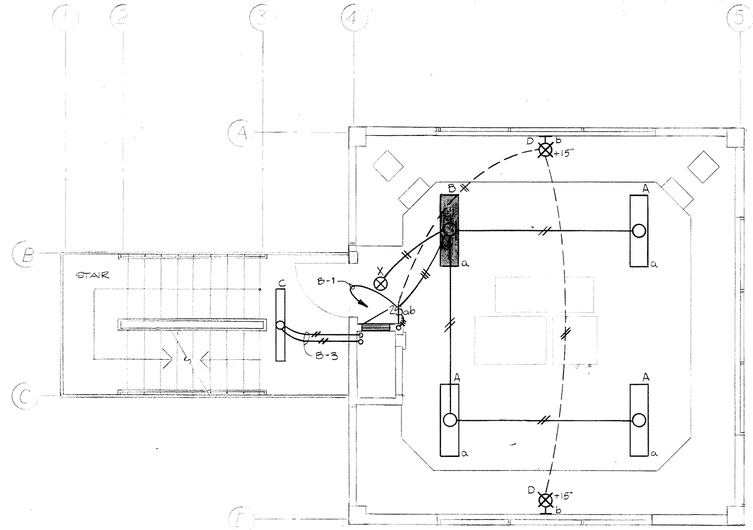

FOURTH FLOOR PLAN – LIGHTING

SCALE: 1/4" = 1'-0"

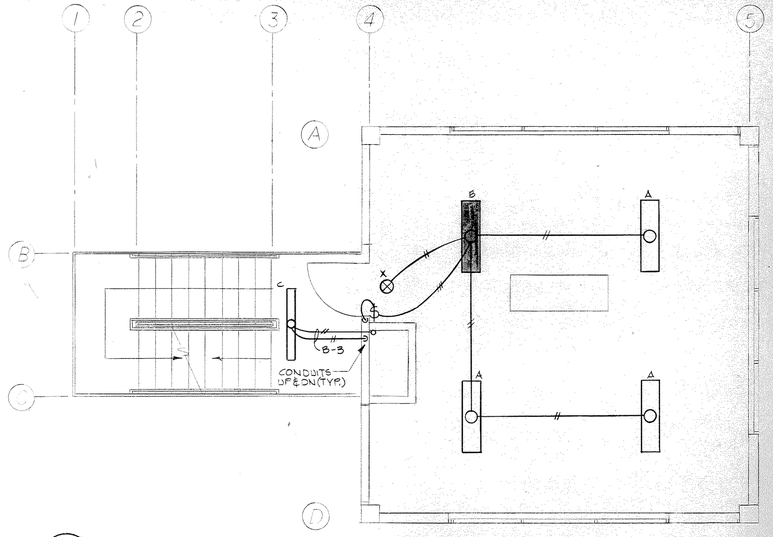

THIRD FLOOR PLAN – LIGHTING

SCALE: 1/4" = 1'-0"

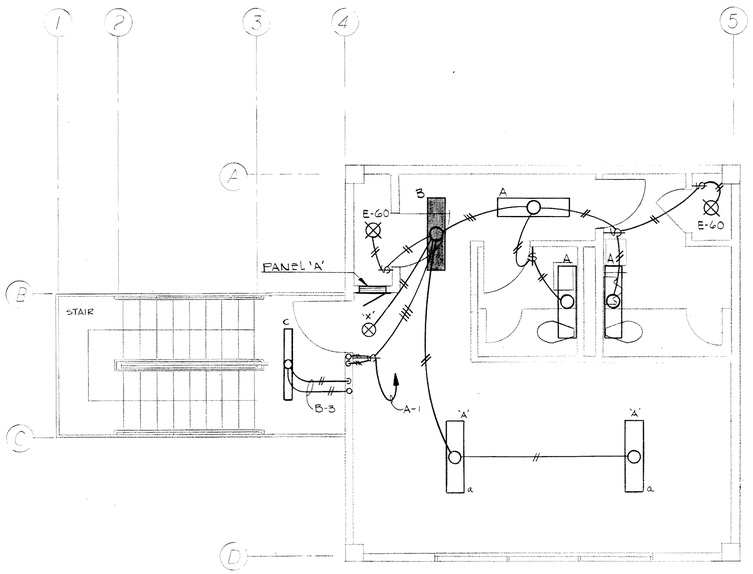

SECOND FLOOR PLAN – LIGHTING

SCALE: 1/4" = 1'-0"

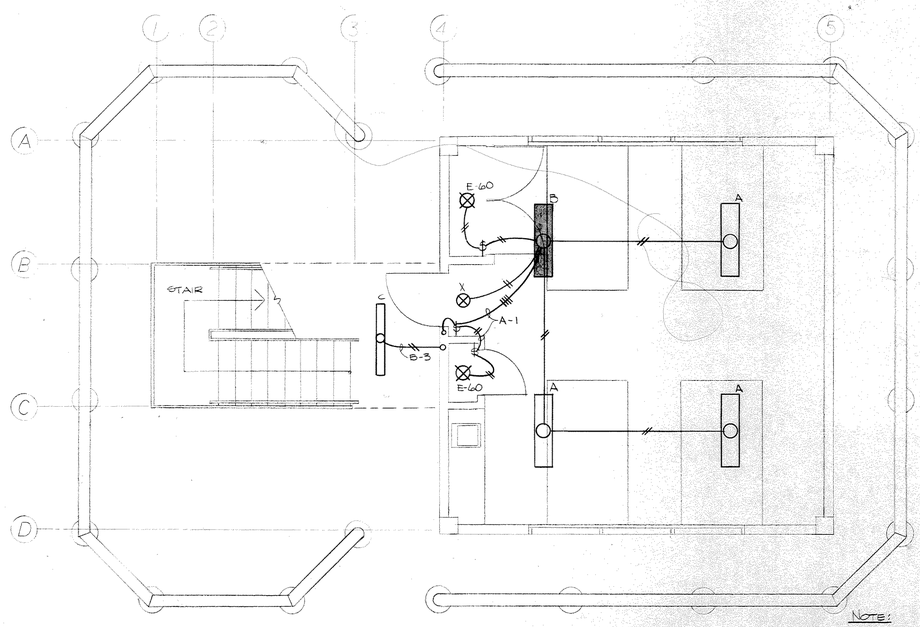

FIRST FLOOR PLAN – LIGHTING

SCALE: 1/4" = 1'-0"

NOTE:
EC SHALL STUB ALL SPARE OR FUTURE SYSTEM CONDUITS A MIN OF 6" ABV. FIN. FLR. OR 12" BELOW CLG. IN MECH. RM. 102.

PORT of TACOMA U.S.A.

PORT OF TACOMA
P.O. BOX 1837 TACOMA, WASHINGTON 98401
(206)383-5841

CONSULTANTS
RBML
RUE • BUTLER • MARSHALL • LAMB, Architects, PS
members, american institute of architects
732 pacific ave., tacoma, wa 98402 • (206) 383-1011

SEAL: ALLAN F. CRATON, STATE OF WASHINGTON, REGISTERED PROFESSIONAL ENGINEER

APPROVED
CHIEF ENGINEER — DATE 10/7/88

DRAWN BY — DATE
AS-BUILT BY — DATE

CHECKED BY — DATE
PROJ.ENGR. — DATE 10/7/88

MARK	REVISION	BY	APP.	DATE

CONTROL TOWER
FOR NORTH INTERMODAL YARD
LIGHTING

DRAWING No. EP 4200-4
CONTRACT No. 622 B
SHEET No. E-3 OF 6

PANEL SCHEDULES

PANEL 'A'

400 AMPS BUSSING, 120/208 VOLTS, 3 PHASE, 4 WIRE

CKT. # ON DWGS.	CIRCUIT BREAKER AMPS	CIRCUIT BREAKER POLES	DESCRIPTION	CIRCUIT VA	CIRCUIT POLE NO.	PHASE LOAD KVA A	PHASE LOAD KVA B	PHASE LOAD KVA C	CIRCUIT POLE NO.	CIRCUIT VA	DESCRIPTION	CIRCUIT BREAKER AMPS	CIRCUIT BREAKER POLES	CKT. # ON DWGS.
1	20	1	Lighting	1510	1	2.01			2	500	Temp. Control Panel	20	1	2
3			Spare	1000	3		2.0		4	1000	Spare			4
5			"	1000	5			1.72	6	720	Receptacles			6
7			Receptacles	1000	7	1.72			8	720	"			8
9			"	540	9		1.04		10	500	"			10
11			Tel. Terminal Board	180	11			1.08	12	900	"			12
13			Exhaust Fans	350	13	1.07			14	720	"			14
15	35	2	Hot Water Heater	2500	15		3.22		16	720	"			16
	—	—	" " "	2500	17			4.58	18	2080	Outdoor H.P. Unit	40	2	
17	40	2	Outdoor H.P. Unit	1966	19	4.05			20	2080	" " "	—	—	18
	—	—	" " "	1966	21		2.97		22	1000	Spare	20	1	20
19	25	2	Wall Heater	2000	23			3.0	24	1000	"			22
	—	—	" "	2000	25	4.0			26	2000	Wall Heater	25	2	
21	25	2	Wall Heater	2000	27		4.0		28	2000	" "	—	—	24
	—	—	" "	2000	29			4.0	30	2000	Wall Heater	25	2	
23	25	2	Wall Heater	2000	31	4.0			32	2000	" "	—	—	26
	—	—	" "	2000	33		4.0		34	2000	Wall Heater	25	2	
25	20	1	Fire Alarm Panel	200	35			2.20	36	2000	" "	—	—	28
27			Receptacles	180	37	12.80			38	12620	Panel 'B'	150	3	
29			"	180	39		13.24		40	13060	" "	—	—	30
31			Spare	1000	41			13.72	42	12720	" "	—	—	
REMARKS:				LOAD/PHASE		29.65	30.47	30.30						

TOTAL CONNECTED LOAD 90.42 KVA

PANEL 'B'

225 AMPS BUSSING, 102/208 VOLTS, 3 PHASE, 4 WIRE

CKT. # ON DWGS.	CIRCUIT BREAKER AMPS	CIRCUIT BREAKER POLES	DESCRIPTION	CIRCUIT VA	CIRCUIT POLE NO.	PHASE LOAD KVA A	PHASE LOAD KVA B	PHASE LOAD KVA C	CIRCUIT POLE NO.	CIRCUIT VA	DESCRIPTION	CIRCUIT BREAKER AMPS	CIRCUIT BREAKER POLES	CKT. # ON DWGS.
1	20	1	Lighting	840	1	1.84			2	1000	Spare	20	1	2
3			Exterior Lighting	400	3		1.40		4	1000	"			4
5			Spare	1000	5			2.0	6	1000	"			6
7			"	1000	7	2.0			8	1000	"			8
9			"	1000	9		1.2		10	200	Future Surv. System			10
11			Receptacles	720	11			1.62	12	900	Receptacles			12
13			"	720	13	1.44			14	720	"			14
15			"	180	15		.36		16	180	"			16
17			"	1000	17			1.18	18	180	"			18
19			"	180	19	.72			20	540	"			20
21			"	180	21		.72		22	540	"			22
23			"	180	23			1.18	24	1000	Spare			24
25			"	720	25	.90			26	180	Receptacles			26
27			"	720	27		.90		28	180	"			28
29			"	180	29			1.08	30	900	"			30
31			"	180	31	.90			32	720	"			32
33			"	540	33		.72		34	180	"			34
35			"	540	35			.72	36	180	"			36
	50	2	Indoor H.P. Unit	3819	37	4.82			38	1000	Spare			38
37	—	—	" " "	3819	39		7.76		40	3943	Indoor H.P. Unit	50	2	
39	20	1	Spare	1000	41			4.94	42	3943	" " "	—	—	42
REMARKS:				LOAD/PHASE		12.62	13.06	12.72						

TOTAL CONNECTED LOAD 38.40 KVA

LIGHT'G LOAD CALCULATION:

BUDGET: 2205 ø' X 1.5 W/ø' = 3307.5 W
84 LIN. FT. X 7.5 W/FT. = 630. W
TOTAL 3937.5 W
ACTUAL LIGHT'G CONN. LOAD = 2750. W

LOAD SUMMARY:

TOTAL CONNECTED LOAD ——— 90.42 KVA.

LOAD BREAKDOWN:

LIGHT'G ——— 2.75 KW.
* MOTORS ——— 9.57 KVA.
REGIST. HT'G. ——— 43.40 KW
MISC. (RECEPTS. ETC.) ——— 18.70 KW
SPARES ——— 16.00 KVA
TOTAL ——— 90.42 KVA.

* NO MOTORS RATED OVER 3 H.P.

ESTIMATED MAX. CONN. LOAD AT 500 KVA. PAD MOUNT TRANSF.

EXIST'G LOADS ——— 428.9 KVA
CONTROL TOWER ——— 90.42 KVA.
TOTAL ——— 519.32 KVA.

ESTIMATED MAX. DEMAND - 65% = 337.56 KVA

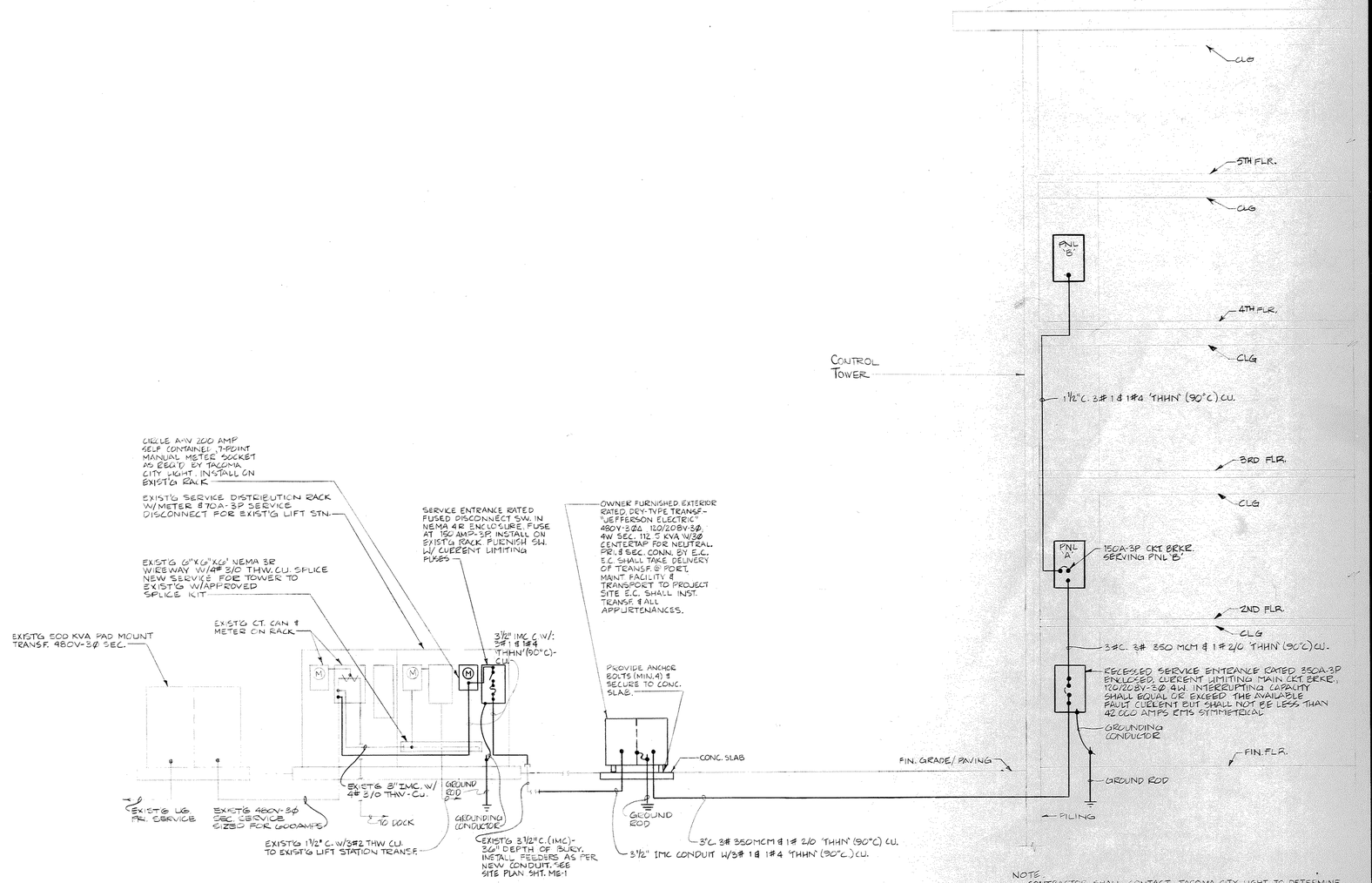

NOTE:
CONTRACTOR SHALL CONTACT TACOMA CITY LIGHT TO DETERMINE THE AVAILABLE FAULT CURRENT AT THE EXIST'G SERVICE DISTRIBUTION RACK. ALL BREAKERS, ALL SERVICE DISCONNECTS SHALL EQUAL OR EXCEED AVAILABLE FAULT CURRENT.

ELECTRICAL DISTRIBUTION DIAGRAM

DIAGRAMATIC

PORT of TACOMA U.S.A.

PORT OF TACOMA
P.O. BOX 1837 TACOMA, WASHINGTON 98401
(206)383-5841

CONSULTANTS
RBML
RUE • BUTLER • MARSHALL • LAMB, Architects, PS
members, american institute of architects
732 pacific ave., tacoma, wa 98402 ● (206) 383-1011

ALLEN V. CARTER — STATE OF WASHINGTON — REGISTERED PROFESSIONAL ENGINEER

APPROVED
CHIEF ENGINEER — DATE 10/7/88

DRAWN BY	DATE	CHECKED BY	DATE
AS-BUILT BY	DATE	PROJ.ENGR.	DATE 10/7/88

MARK	REVISION	BY	APP.	DATE

CONTROL TOWER
FOR NORTH INTERMODAL YARD
ELECTRICAL DISTRIBUTION DIAGRAM - PANEL SCHEDULES

DRAWING No. EP 4200-4
CONTRACT No. 622 B
SHEET No. E-4 OF 6

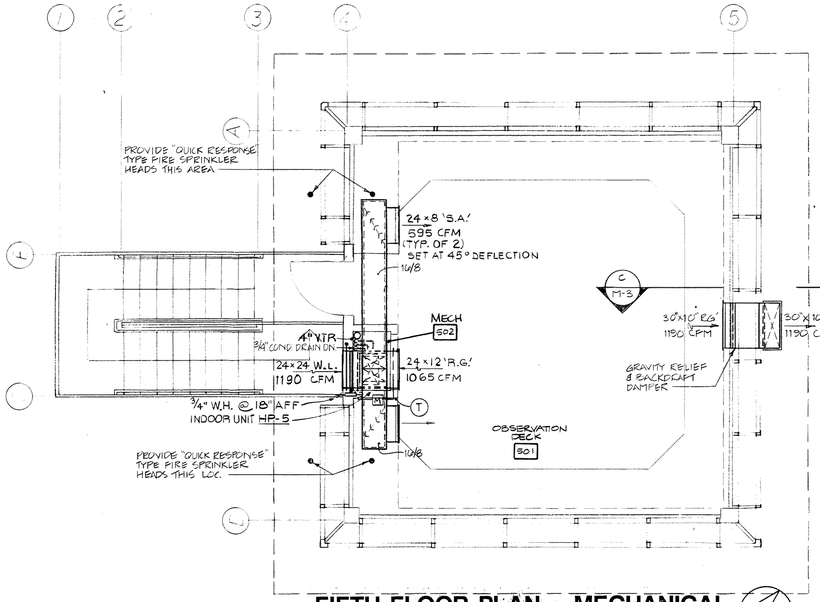

FIFTH FLOOR PLAN - MECHANICAL

SCALE: 1/4" = 1'-0"

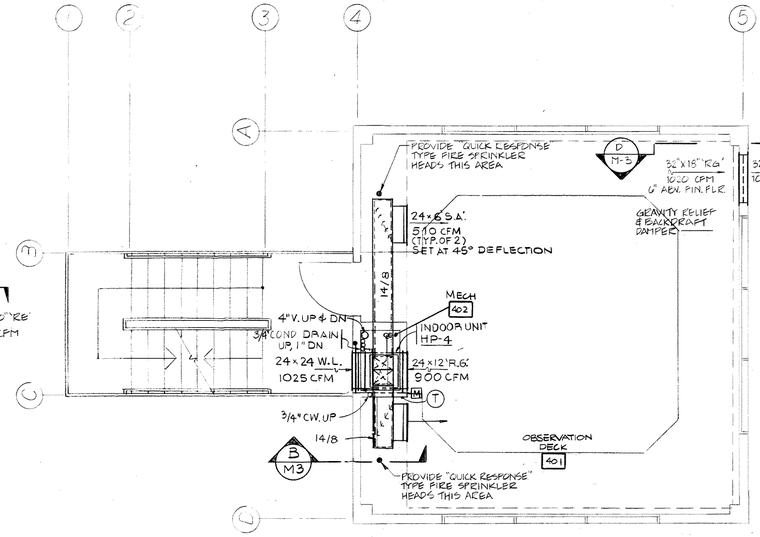

FOURTH FLOOR PLAN - MECHANICAL

SCALE: 1/4" = 1'-0"

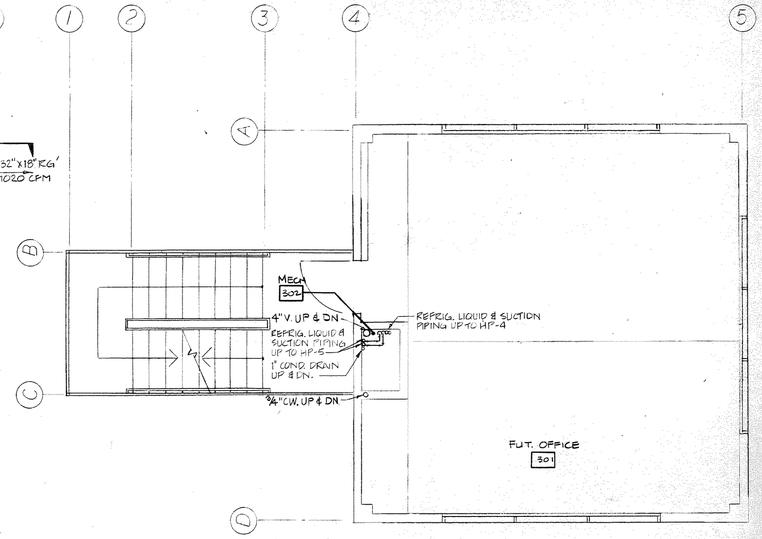

THIRD FLOOR PLAN - MECHANICAL

SCALE: 1/4" = 1'-0"

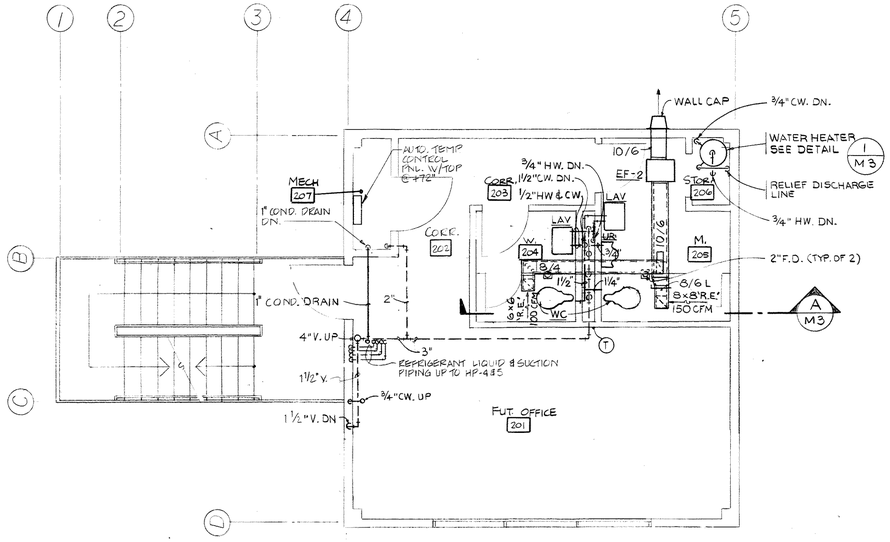

SECOND FLOOR PLAN - MECHANICAL

SCALE: 1/4" = 1'-0"

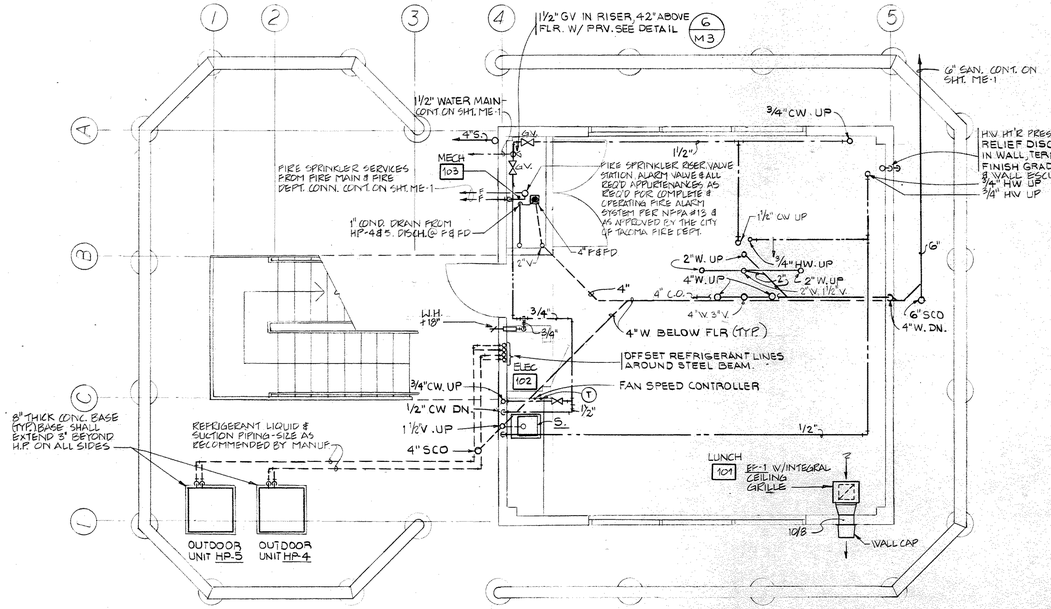

FIRST FLOOR PLAN - MECHANICAL

SCALE: 1/4" = 1'-0"

NOTE:

"Refrigerant piping and control wire conduit between the building and the outdoor heat pump units shall be run underground per Detail 7 on Drawing Sheet M-3."

PORT of TACOMA U.S.A.	PORT OF TACOMA P.O. BOX 1837 TACOMA, WASHINGTON 98401 (206)383-5841	CONSULTANTS RBML RUE • BUTLER • MARSHALL • LAMB, Architects, PS members, american institute of architects 702 pacific ave., tacoma, wa 98402 • (206) 383-1011	SEAL ALBERT V. CORTEN STATE OF WASHINGTON REGISTERED PROFESSIONAL ENGINEER	APPROVED R L MacLeod CHIEF ENGINEER	11/17/88 DATE	DRAWN BY / DATE AS-BUILT BY / DATE	CHECKED BY / DATE PROJ. ENGR. / DATE	MARK / REVISION / BY / APP. / DATE	CONTROL TOWER FOR NORTH INTERMODAL YARD MECHANICAL FLOOR PLANS	DRAWING No. EP 4200-4 CONTRACT No. 622B SHEET No. M-2 OF 6	

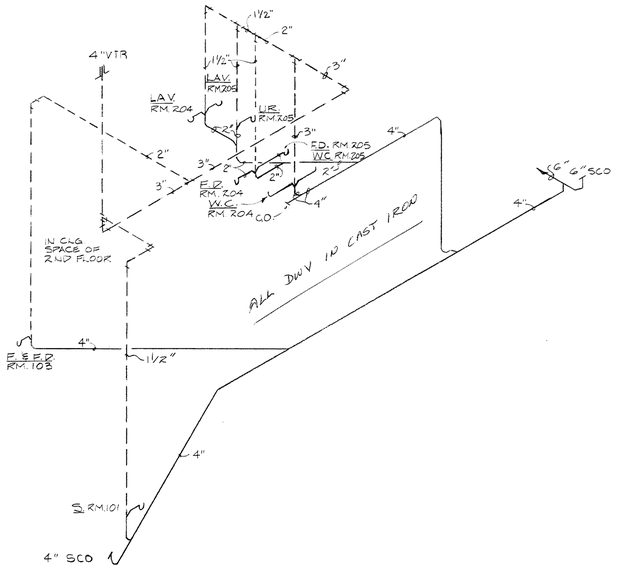

WASTE & VENT RISER DIAGRAM

DIAGRAMMATIC

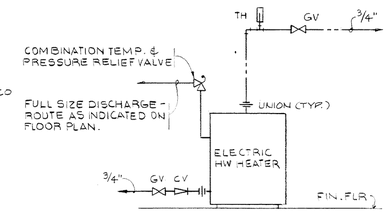

HOT WATER HEATER PIPING DIAGRAM (1/M3)

DIAGRAMMATIC

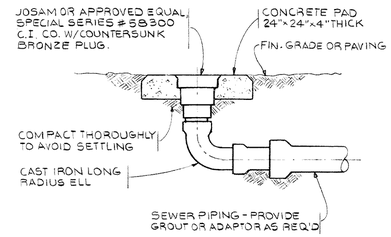

SURFACE CLEANOUT DETAIL (2/M3)

NOT TO SCALE

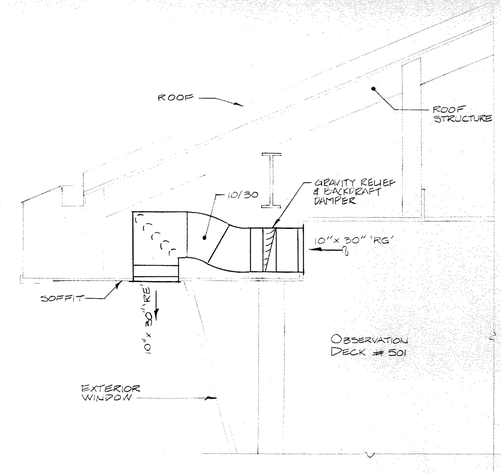

SECTION (C/M3)

SCALE: 3/4" = 1'-0"

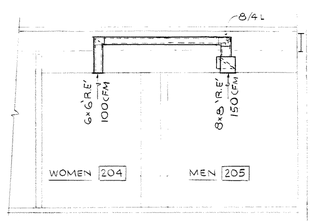

SECTION (A/M3)

SCALE: 1/4" = 1'-0"

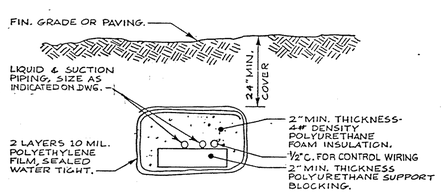

UNDERGROUND REFRIG. PIPING INST. DETAIL (7/M3)

NOT TO SCALE

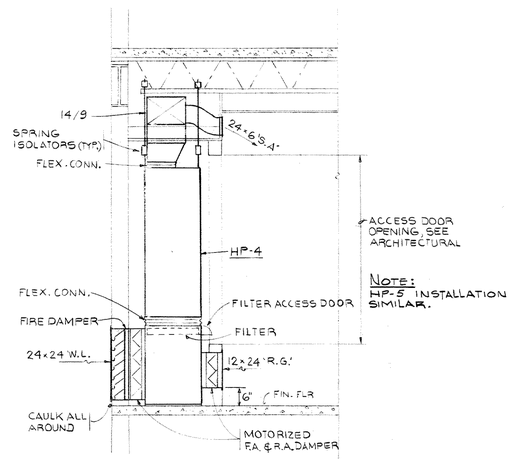

SECTION (B/M3)

SCALE: 1/2" = 1'-0"

5

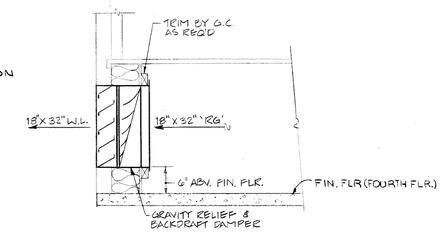

SECTION (D/M3)

SCALE: 3/4" = 1'-0"

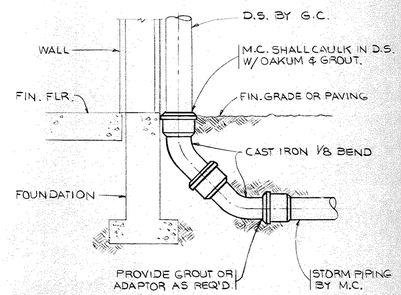

DOWNSPOUT CONNECTION DETAIL (4/M3)

NOT TO SCALE

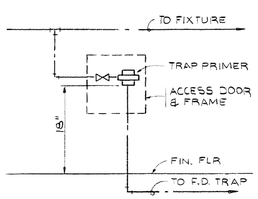

TRAP PRIMER PIPING DIAGRAM

DIAGRAMMATIC

PLUMBING FIXTURE SCHEDULE

SYMBOL	FIXTURE	C.W	H.W.	W.	V.	REMARKS
WC	WATER CLOSET	1"	–	4	3"	
UR	URINAL	3/4"	–	2"	1 1/2"	
LAV.	LAVATORY	1/2"	1/2"	2"	1 1/2"	
S.	SINK	1/2"	1/2"	2"	1 1/2"	
F.D.	FLOOR DRAIN	–	–	SIZES AS INDICATED ON PLANS		W/ TRAP PRIMER
F. & F.D.	FLOOR & FUNNEL DRAIN	–	–	"	"	" " "

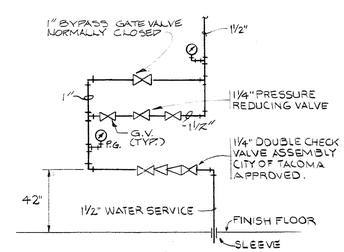

DOMESTIC WATER RISER (6/M3)

DIAGRAMMATIC

PORT of TACOMA U.S.A.

PORT OF TACOMA
P.O. BOX 1837 TACOMA, WASHINGTON 98401
(206)383-5841

CONSULTANTS
RBML
RUE • BUTLER • MARSHALL • LAMB, Architects, PS
members, american institute of architects
732 pacific ave., tacoma, wa 98402 • (206) 383-1011

SEAL: ALLEN V. CRATTON, STATE OF WASHINGTON, REGISTERED PROFESSIONAL ENGINEER

APPROVED
CHIEF ENGINEER — DATE 12/2/87

DRAWN BY — DATE
AS-BUILT BY — DATE
CHECKED BY — DATE
PROJ. ENGR. — DATE

MARK	REVISION	BY	APP.	DATE

CONTROL TOWER
FOR NORTH INTERMODAL YARD
MECHANICAL DETAILS

DRAWING No. EP 4200-4
CONTRACT No. 622B
SHEET No. M-3 OF 6

GENERAL NOTES

These General Notes are to be used as a supplement to the Specifications. Any discrepancies found among the Drawings, the Specifications, these General Notes and the site conditions shall be reported to the Architect, who shall correct such discrepancy in writing. Any work done by the Contractor after discovery of such discrepancy shall be done at the Contractor's risk. The Contractor shall verify and coordinate dimensions among all drawings prior to proceeding with any work or fabrication. The Contractor is responsible for all bracing and shoring during construction.

Standards
All methods, materials and workmanship shall conform to the 1985 Uniform Building Code (UBC) as amended and adopted by the City of Tacoma.

DESIGN CRITERIA

		Roof	2nd & 3rd Floor	4th & 5th Floor
Vertical Loads:	Dead Load	15 PSF	38 PSF	38 PSF
	Live Load	25 PSF	50 PSF	50 PSF

Lateral Forces

1. Lateral forces are transmitted by diaphragm action of roof and floors to moment frames.
2. Wind: P=CeCqQsI, Basic Wind Speed = 80 MPH
   Exposure Classification B, Importance Coefficient 1.0
   Uplift - Enclosed Roof Areas: Cq = -1.1. Net pressure = P-2/3 (Design Dead Load).
   Overhangs and Partly Enclosed Areas: Cq = -1.6. Net pressure = P-2/3 (Design Dead Load).
3. Seismic: Zone 3 per 1985 UBC. V=ZIKCSW, V=Base Shear, Z=.75, I=1.00, K=1.00, CS=.134, W=Dead Load of Portion of Building.

Foundation: According to Hart-Crowser, Inc. "Geotechnical Engineering Design Study" dated October 19, 1987. Piling shall be 30 ton, Class B, treated Douglas Fir piles, with a minimum tip circumference of 22 inches and meeting all requirements of UBC Standard 25-14. Piles shall be treated per UBC Standard 25-12 with a minimum 17 lb./cu. ft. creosote retention. Drive to capacity using "Engineering News Record Formula" with 15,000 foot pounds per blow minimum. Provide driving records to Engineer and City of Tacoma Building Department.

CONCRETE

Concrete: Shall be made with Portland Cement ASTM C-150 Type II or Type I-II, and shall be ready-mixed per ASTM C-94. f'c=3000 PSI, maximum slump 5" for pile caps and ties; f'c=4000 PSI, maximum slump 4" for slabs and all other concrete.

Metal Reinforcement: All reinforcing shall conform to ASTM A-615, Grade 60 (Grade 40 for welded bars unless otherwise noted). Detail, fabricate and place per ACI 315 and ACI 318. Splices shall be 24 bar diameters or 18" minimum. Welded Wire Fabric shall conform to ASTM A-82 and A-185. Lap one full mesh on sides and ends. Place at mid-depth of slab, or as shown.

Non-Shrink Grout: Master Builders "Masterflow 928" or approved equal. Grout may be placed from a 25 second flow to a stiff packing consistency. Fill or pack entire space under plates or shapes. No grouting shall be done below 40°F. f'c=3000 PSI.

STRUCTURAL STEEL

Detailing, Fabrication and Erection: Conform to AISC "Manual of Steel Construction", 8th Edition.

Steel Shapes and Plates: ASTM A-36 (fy=36 ksi).

Structural Steel Pipes: ASTM A-53 (fy=35 ksi).

Steel Structural Tubing: ASTM A-500 (fy=46 ksi).

Machine Bolts (M.B.) and Anchor Bolts (A.B.): ASTM A-307.

High Strength Bolts: ASTM A-325(F) high strength bolts. All high strength bolts shall be installed with hardened washers conforming to ASTM F-436 and nuts conforming to ASTM A-563. Friction type bolts (A-325-F) shall be installed per paragraph 8(d) of the Specifications for Structural Joints Using ASTM A-325 or A-490 Bolts (1985), as approved by the Research Council on Structural Connections of the Engineering Foundation and endorsed by the American Institute of Steel Construction.

Load Indicating Washers: Conform to ASTM F-959. "Coronet Load Indicators" by Cooper + Turner Inc., or approved equal, shall be used as the authorized direct tension indicator.

Concrete Anchors: Hooked or headed, smooth dowel stock, shop welded by certified welders.

Finish: Shop paint after fabrication with an approved primer (see Specifications). Galvanize after fabrication all miscellaneous steel specifically called to be galvanized in plans, specifications or details.

Metal Joists: Shall conform to the Steel Joist Institute (SJI) and American Institute for Steel Construction (AISC) standards and shall be designed to carry the loads listed in the design criterion and those indicated on the framing plans. For special requirements, see structural drawings. Shop drawings shall be submitted bearing the stamp of a structural engineer licensed as such in the State of Washington.

Composite and Non-Composite Floor Deck: Composite floor deck shall be Type "B Formlok" and non-composite floor deck shall be "Form Deck" (with depth and gauge as shown on Drawings) as manufactured by Verco Manufacturing, Inc., or approved equal. The floor units shall be formed from steel sheets conforming to ASTM A-446-72, and galvanized per ASTM A-525-71. Submit shop drawings showing layout and fastening pattern. All accessories shall be provided to complete the erection of the steel floor.

Metal Roof Deck: Shall contain the minimum properties shown on the structural drawings and specifications. The roof deck shall be formed from steel sheets conforming to A-446-72, and shall be galvanized per ASTM A-525. The roof deck shall be placed on the supporting framework with a minimum end lap of two inches.

Light-Gauge Metal Framing: Framing members shall be of the type, size and gauge as shown on the Plans and shall be manufactured by the Milcor Division of INRYCO Inc., or approved equal. All 16 gauge and heavier galvanized structural members shall be formed from steel that meets the requirements of ASTM A-446-72, Grade D, minimum 50 ksi yield. Bridging per manufacturer's requirements shall be in place prior to placing of any construction loads.

WELDING

Structural Steel: Weld in accordance with "Structural Welding Code" AWS D-1.1-85.

Reinforcing Steel: Weld in accordance with "Reinforcing Steel Welding Code" AWS D-1.4-79. Weld only with specific approval of the Engineer. In no case will a weld be made within 6 bar diameters of a "cold bend".

Certification: All welding shall be by WABO certified welders.

Electrodes: Use E60 or E70 electrodes.

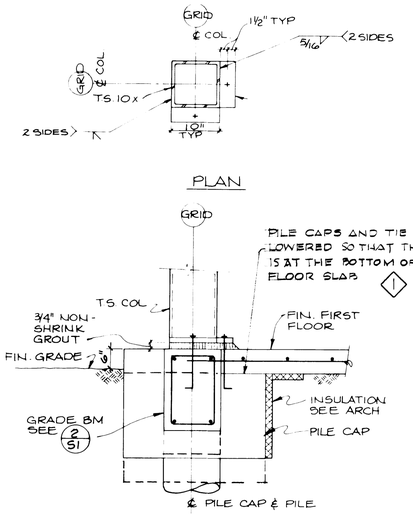

TYP COL BASE CONN DETAIL

SECTION 7/S1
3/4" = 1'-0"

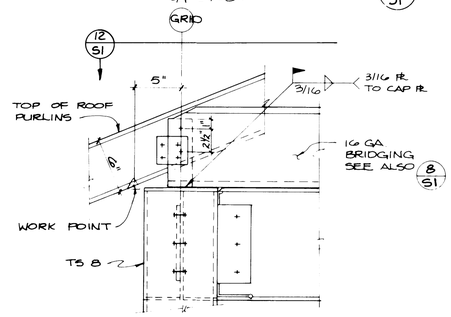

SECTION 11/S1
1½" = 1'-0"

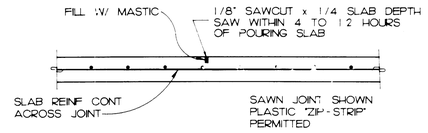

TYP CONTROL JT FOR SLABS ON GRADE

SECTION 1/S1
NO SCALE

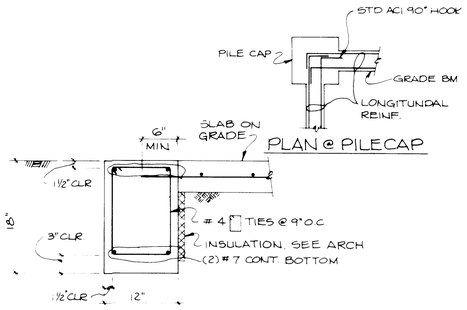

TYP GRADE BEAM

SECTION 2/S1
1" = 1'-0"

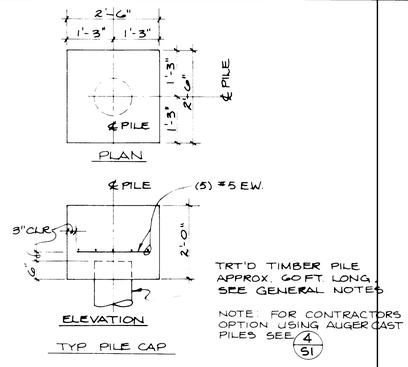

TYP PILE CAP

DETAIL 3/S1
1" = 1'-0"

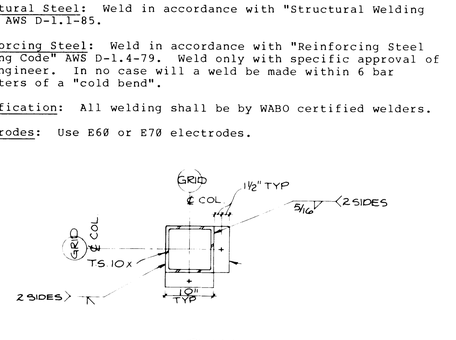

TYP AUGERCAST PILE DETAIL
CONTRACTORS OPTION

DETAIL 4/S1
1/2" = 1'-0"

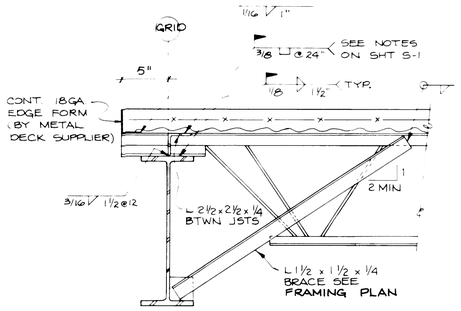

TYP JOIST TO BEAM CONN.

SECTION 5/S1
1½" = 1'-0"

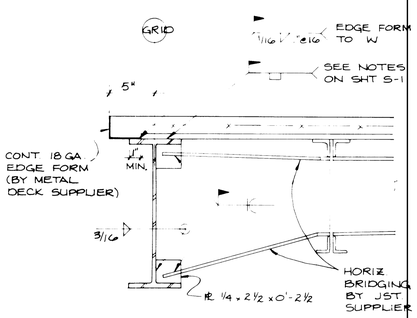

TYP JST. BRIDGING DETAIL

SECTION 6/S1
1½" = 1'-0"

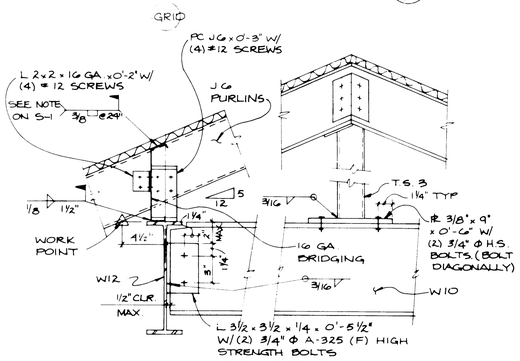

SECTION 8/S1
1½" = 1'-0"

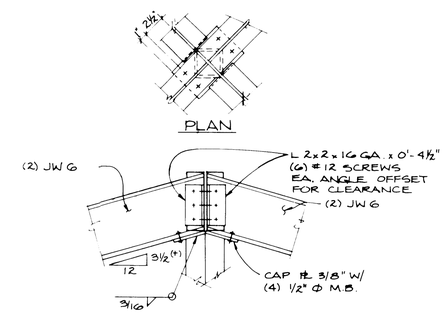

SECTION 9/S1
1½" = 1'-0"

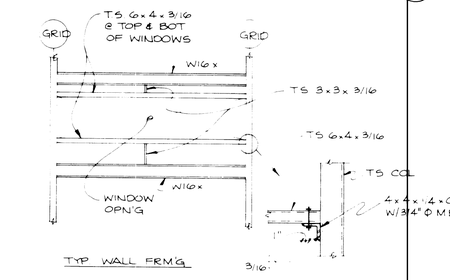

ELEVATION 10/S1
NO SCALE

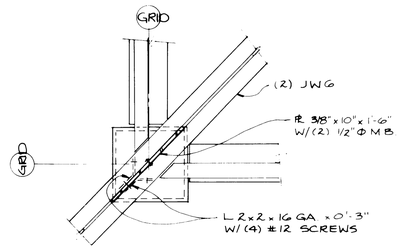

PLAN 12/S1

PORT of TACOMA U.S.A.

PORT OF TACOMA
P.O. BOX 1837 TACOMA, WASHINGTON 98401
(206)383-5841

CONSULTANTS

SEAL: DONALD P. SCOTT, STATE OF WASHINGTON, 22917, REGISTERED PROFESSIONAL ENGINEER

APPROVED
CHIEF ENGINEER — DATE 11/17/88

TWS	11-18-88	
DRAWN BY	DATE	CHECKED BY DATE
R.J.S	4-9-91	
AS-BUILT BY	DATE	PROJ.ENGR. DATE

MARK	REVISION	BY	APP.	DATE
1	REVISED TO AS-BUILT	R.J.S.		4.9.91

GENERAL NOTES & MISC. DETAILS

DRAWING No. EP4200-4
CONTRACT No. G22 B
SHEET No. S1 OF 2

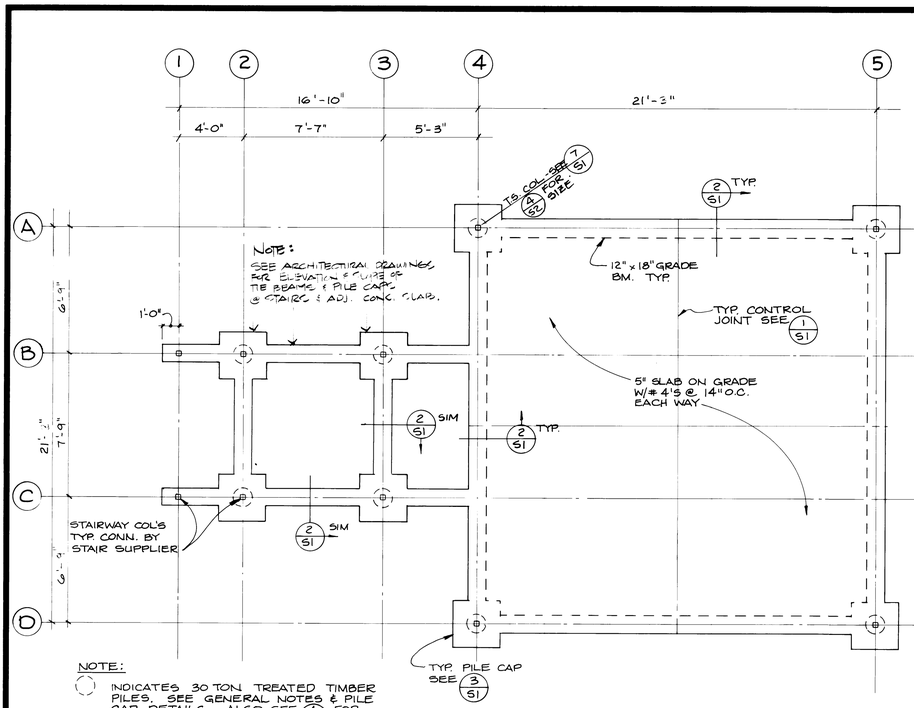

NOTE:

INDICATES 30 TON TREATED TIMBER PILES. SEE GENERAL NOTES & PILE CAP DETAILS. ALSO SEE 4/51 FOR AUGERCAST PILE OPTION.

FOUNDATION PLAN 1/52

1/4" = 1'-0"

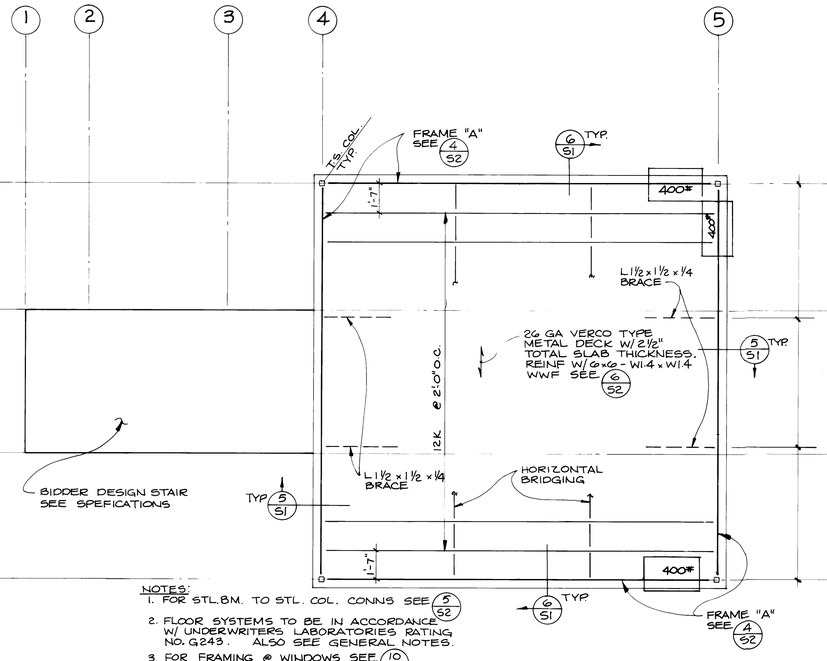

NOTES:

1. FOR STL. BM. TO STL. COL. CONNS SEE 5/52
2. FLOOR SYSTEMS TO BE IN ACCORDANCE W/ UNDERWRITERS LABORATORIES RATING NO. G243. ALSO SEE GENERAL NOTES.
3. FOR FRAMING @ WINDOWS SEE 10/51

TYPICAL FLOOR FRAMING 2/52

1/4" = 1'-0"

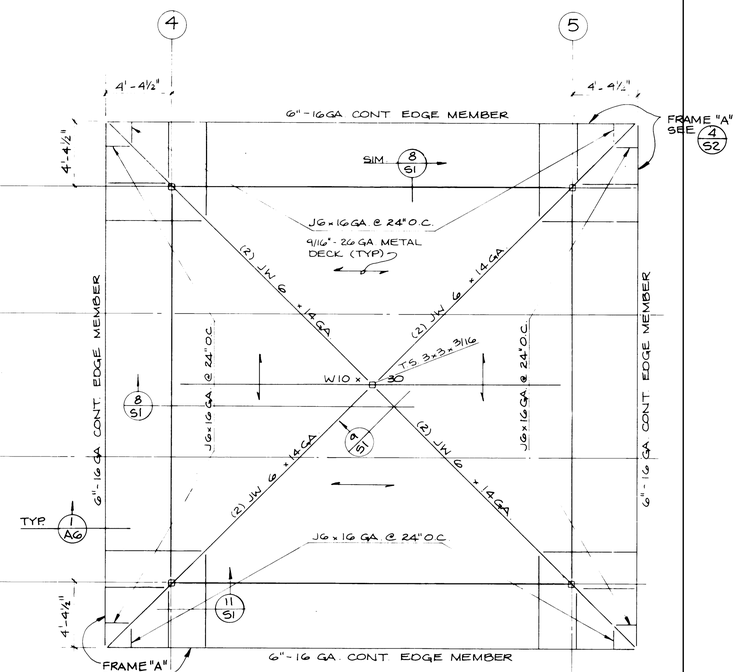

ROOF FRAMING PLAN 3/52

1/4" = 1'-0"

BEAM TO COLUMN CONNECTION TABLE			
BEAM SIZE	"t" (THICKNESS)	"n" (NUMBER)	DETAIL NO.
W12 x 14	3/8"	3	1
W16 x 26	1/2"	4	2
W21 x 44	3/4"	5	2

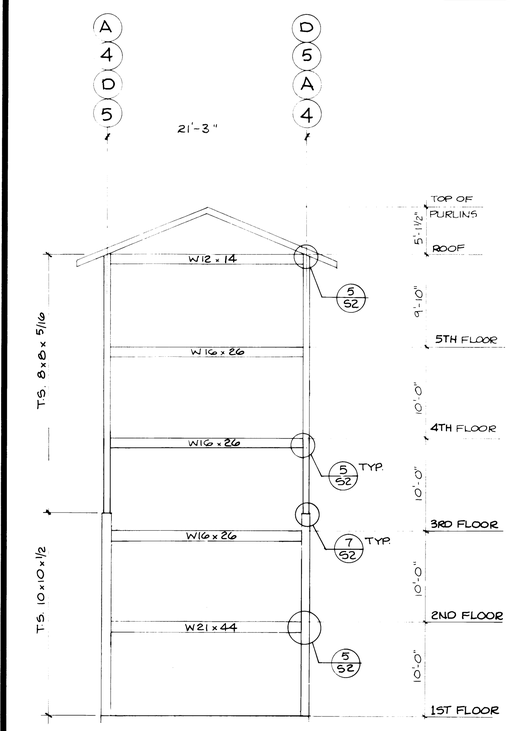

FRAME "A" 4/52

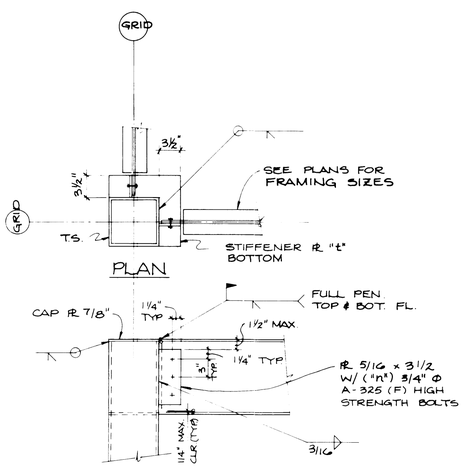

TYP. ROOF BEAM TO COLUMN CONN.

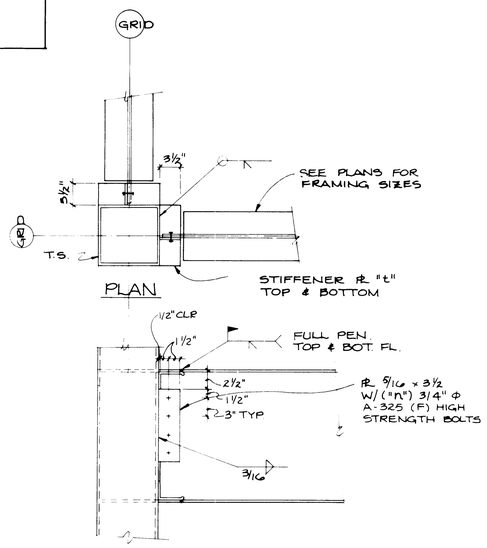

TYP. FLOOR BEAM TO COLUMN CONN.

DETAIL 5/52

1" = 1'-0"

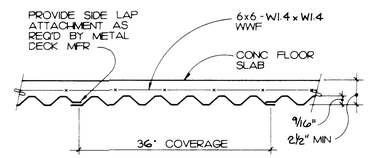

MIN VERCOR DECK PROPERTIES		
GAGE	I - in.^{4}	S - in.^{3}
26	.0130	.039

TYP FLOOR DECK

SECTION 6/52

NO SCALE

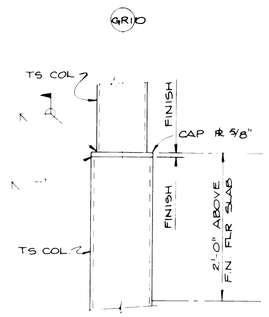

COL. SPLICE DETAIL

DETAIL 7/52

1" = 1'-0"

PORT of TACOMA U.S.A.

PORT OF TACOMA
P.O. BOX 1837 TACOMA, WASHINGTON 98401
(206)383-5841

CONSULTANTS
RBML
RUE • BUTLER • MARSHALL • LAMB, Architects, PS
members, american institute of architects
732 pacific ave., tacoma, wa 98402 ● (206) 383-1011

SEAL: DONALD R. SCOTT, STATE OF WASHINGTON, 22911, REGISTERED PROFESSIONAL ENGINEER

APPROVED
CHIEF ENGINEER — DATE 11/17/88

TWS	11-18-88		
DRAWN BY	DATE	CHECKED BY	DATE
		C. HASEEN	
AS-BUILT BY	DATE	PROJ. ENGR.	DATE

MARK	REVISION	BY	APP.	DATE
	NO AS BUILT REVISIONS	RJS		4-9-91

CONTROL TOWER
FOR NORTH INTERMODAL YARD
FOUNDATION & FRAMING PLANS

DRAWING No. EP4200-4
CONTRACT No. G22 B
SHEET No. S2 OF 2

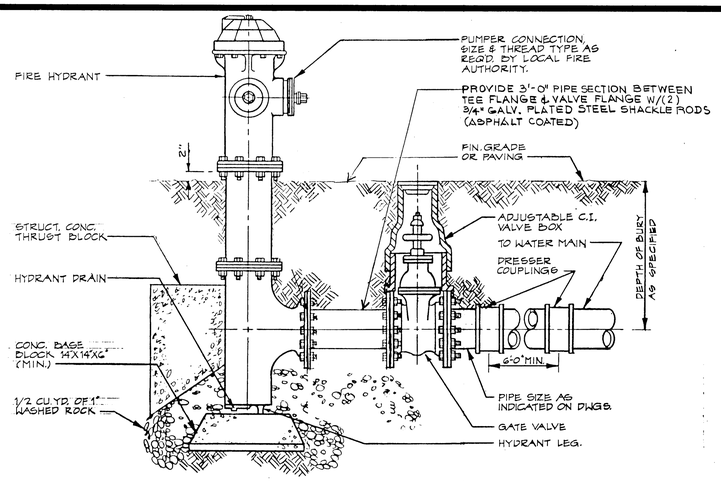

FIRE HYDRANT INSTALLATION DETAIL

NOT TO SCALE

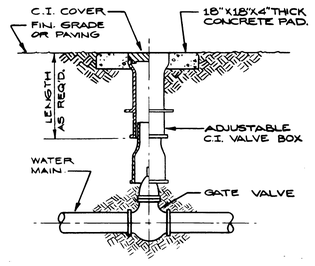

VALVE BOX INST. DETAIL

NOT TO SCALE

MECHANICAL SYMBOLS

SYMBOL	ABBR.	DESCRIPTION
		BUTTERFLY VALVE
		BALL VALVE
	GV	GATE VALVE
		GLOBE VALVE
	CV	CHECK VALVE
	PRV	PRESSURE REDUCING VALVE
		BACKFLOW PREVENTOR
		ASME RELIEF VALVE
		CONTROL VALVE
		3 WAY CONTROL VALVE
	BV	BALANCING VALVE
		UNION
	BH	BOX HYDRANT
		GATE VALVE & VALVE BOX
	HB	HOSE BIBB
	WH	WALL HYDRANT
		TRAP PRIMER
		CIRCULATING PUMP
	PG	PRESSURE GAUGE
	TH	THERMOMETER
		FLEXIBLE CONNECTION
	AAV	AUTOMATIC AIR VENT
	STR	STRAINER
	CW	COLD WATER PIPING
	HW	HOT WATER PIPING
	HWC	HOT WATER CIRCULATING
	V	SANITARY VENT PIPING
	SAN	SANITARY SEWER PIPING
S		STORM SEWER PIPING
	R	HEATING RETURN PIPING
	F	HEATING FLOW PIPING
ACID		ACID RESISTANT WASTE
G		GAS PIPING
STM		STEAM PIPING
		CONDENSATE RETURN PIPING
F		FIRE MAIN

SYMBOL	ABBR.	DESCRIPTION
FOS		FUEL OIL SUPPLY
FOR		FUEL OIL RETURN
CWS		CHILLED WATER SUPPLY
CWR		CHILLED WATER RETURN
O_2		OXYGEN PIPING
N_2O		NITROUS OXIDE PIPING
A		COMPRESSED AIR PIPING
V	VAC	VACUUM PIPING
ACY		ACETYLENE
	FD	FLOOR DRAIN
	F & FD	FLOOR & FUNNEL DRAIN
FCO		FLOOR CLEAN OUT
SCO		SURFACE CLEAN OUT
CB		CATCH BASIN
FH		FIRE HYDRANT
		THRUST BLOCK
F & T		FLOAT & THERMOSTATIC TRAP
		BUCKET TRAP
		OXYGEN WALL OUTLET
		COMPRESSED AIR OUTLET
		SINGLE VACUUM WALL OUTLET
		DOUBLE VACUUM WALL OUTLET
	T'-STAT	ROOM THERMOSTAT - @ 5'-4" ABOVE FIN. FLOOR
		DUCT RISING-AIR FLOW DN.
		DUCT RISING-AIR FLOW UP
		DUCT DROP-AIR FLOW DN.
		DUCT DROP-AIR FLOW UP
		SOUNDLINED DUCT
		FLEXIBLE DUCT
	TV	TURNING VANES
	VD	MANUAL VOLUME DAMPER
	F DPR	FIRE DAMPER
	F.A.	FRESH AIR
	R.A.	RETURN AIR
	O.A.	OUTSIDE AIR

ELECTRICAL SYMBOLS

SYMBOL	DESCRIPTION	℄ MTG.HT.
	FLUORESCENT FIXTURE - SURFACE	—
	FLUORESCENT FIXTURE - RECESSED	—
	FIXTURE ON EMERGENCY CIRCUIT	—
	CEILING SURFACE MOUNTED FIXTURE	—
	WALL MOUNTED FIXTURE	—
	SQUARE RECESSED INCANDESCENT FIXTURE	—
	ROUND RECESSED INCANDESCENT FIXTURE	—
$N	FIXTURE ON NIGHT LIGHTING	—
	EXIT FIXTURE, CEILING	—
	EXIT FIXTURE, WALL MOUNTED	—
	EXIT FIXTURE, W/DIRECTIONAL ARROW	—
$	SINGLE-POLE SWITCH	+48"
$2	TWO-POLE SWITCH	+48"
$3	3-WAY SWITCH	+48"
$4	4-WAY SWITCH	+48"
$K	KEY SWITCH	+48"
$P	SWITCH W/PILOT LIGHT	+48"
$F	FAN SWITCH FURNISHED BY MECH., INSTALLED BY ELEC.	+48"
$D	DOOR SWITCH	—
$T	SWITCH W/TIMER	+48"
	DUPLEX RECEPTACLE	+18"
	DUPLEX RECEPTACLE, HORIZONTAL	—
F	RECEPTACLE IN FLOOR BOX	—
W	WEATHERPROOF RECEPTACLE	—
	RANGE RECEPTACLE	—
	SPECIAL RECEPTACLE	—
	HEAT OUTLET, 120 V, 1	—
	HEAT OUTLET, V, AS NOTED	—
	POWER OUTLET, V, 1	—
	POWER OUTLET, V, AS NOTED	—
	SPEAKER OUTLET, CEILING MTG.	—
	SPEAKER OUTLET, WALL MTG.	—
	I.C. SPKR. & CALL SW. - SPKR. @ 5'-9" CALL SW. HT. AS INDICATED	—
	VOLUME CONTROL	+48"
	MANUAL DIMMER	—
	MOTORIZED DIMMER	—

SYMBOL	DESCRIPTION	℄ MTG.HT.
	CHIME	—
TV	TELEVISION ANTENNA OUTLET	+18"
	TELEVISION REMOTE CONTROL OUTLET	—
T	THERMOSTAT	+62"
FD H	FIRE DETECTOR	—
FD S	SMOKE DETECTOR	—
F	FIRE ALARM PULL STATION	+54"
F	FIRE ALARM HORN W/ALARM LIGHT	—
F	FIRE ALARM HORN W/ALARM LIGHT	—
	WALL MTD. FLUSH JUNCTION BOX	—
	FLUSH JUNCTION BOX	—
	PROGRAM CLOCK W/BUZZER	—
	CLOCK HANGER RECEPTACLE	—
F	FLUSH FLOOR BOX	—
T	LOW VOLTAGE TRANSFORMER	—
M	MICROPHONE OUTLET	+18"
	TELEPHONE OUTLET	—
F	TELEPHONE FLOOR BOX & OUTLET	—
	PHOTO-ELECTRIC RELAY	—
	PROGRAM GONG	—
	PANELBOARD	—
	SURFACE METAL RACEWAY	—
	CONDUIT ABV. FLOOR OR GRADE	—
	CONDUIT RISE	—
	CONDUIT DROP	—
	CONDUIT RUN BELOW FLOOR OR FINISHED GRADE	—
	NO. OF CONDUCTORS IN CONDUIT	—
	RUN TO PANEL & NO. OF CIRCUITS	—
+45"	℄ MOUNTING HEIGHT ABV. FIN. FLOOR	—
	ONE BED NURSE CALL STATION	—
	TWO BED NURSE CALL STATION	—
	NURSE CALL SHOWER/TOILET STATION	—
	NURSE CALL DUTY STATION	—
	NURSE CALL PUSHBUTTON STATION	—
	DOOR BUZZER	—
	NURSE CALL CORRIDOR LIGHT	—
	CLASSROOM UTILITY PANEL SEE INST. DETAIL	—
	CLOCK & PROGRAM HORN	—

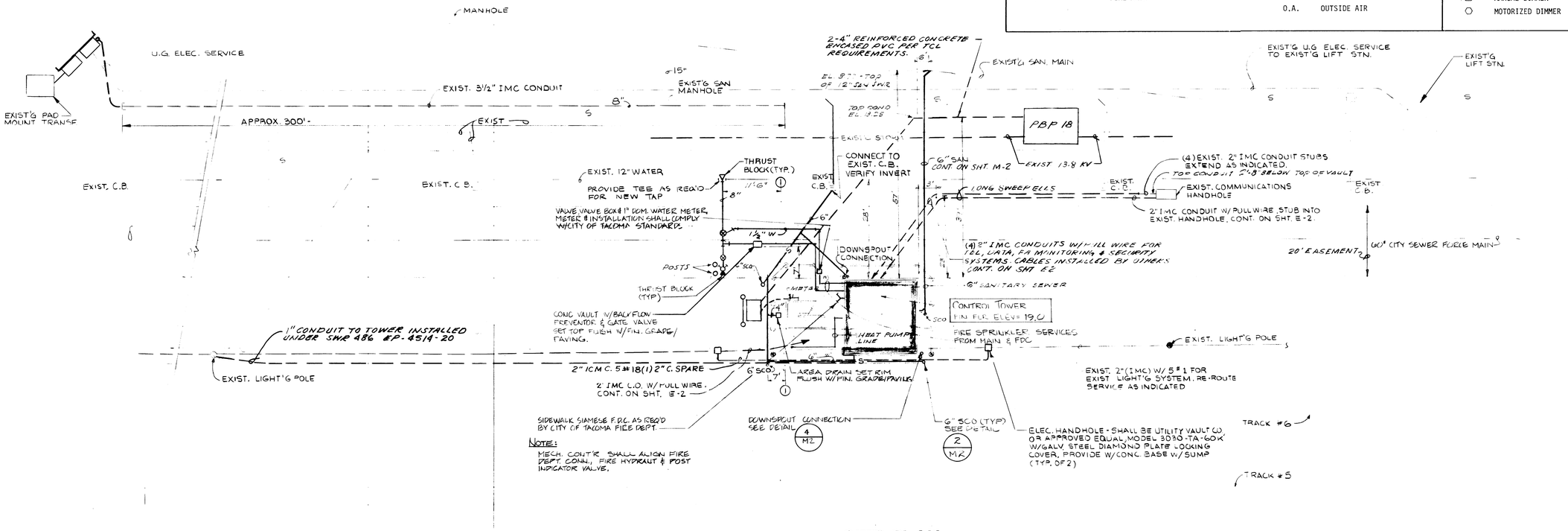

NOTE:
MECH. CONT'R SHALL ALIGN FIRE DEPT. CONN., FIRE HYDRANT & POST INDICATOR VALVE.

SITE PLAN

SCALE: 1/16"=1'-0"

NOTE REFER TO CONTRACTOR'S AS BUILT DRAWING (PENCIL ON YELLOW GRID PAPER) HAS BEEN PLACED IN CONTRACT FILE NO. 622B. 4-10-91

TRUE NORTH PLAN NORTH

PORT of TACOMA U.S.A.

PORT OF TACOMA
P.O. BOX 1837 TACOMA, WASHINGTON 98401
(206)383-5841

CONSULTANTS
RBML
RUE • BUTLER • MARSHALL • LAMB, Architects, ps
members, american institute of architects
732 pacific ave., tacoma, wa 98402 • (206) 383-1011

SEAL: ALLEN V. CRITTEN, STATE OF WASHINGTON, REGISTERED PROFESSIONAL ENGINEER

APPROVED		DRAWN BY	DATE	CHECKED BY	DATE
R.K. Rue Fred	10/7/86	DN			
CHIEF ENGINEER	DATE	AS-BUILT BY	DATE	PROJ.ENGR.	DATE

MARK	REVISION	BY	APP.	DATE
	RE: [illegible]	DN	RJS	-

CONTROL TOWER
FOR NORTH INTERMODAL YARD
SITE PLAN, SYMBOLS, DETAIL

DRAWING No. EP 4200-4
CONTRACT No. 622B
SHEET No. ME-1 OF 6