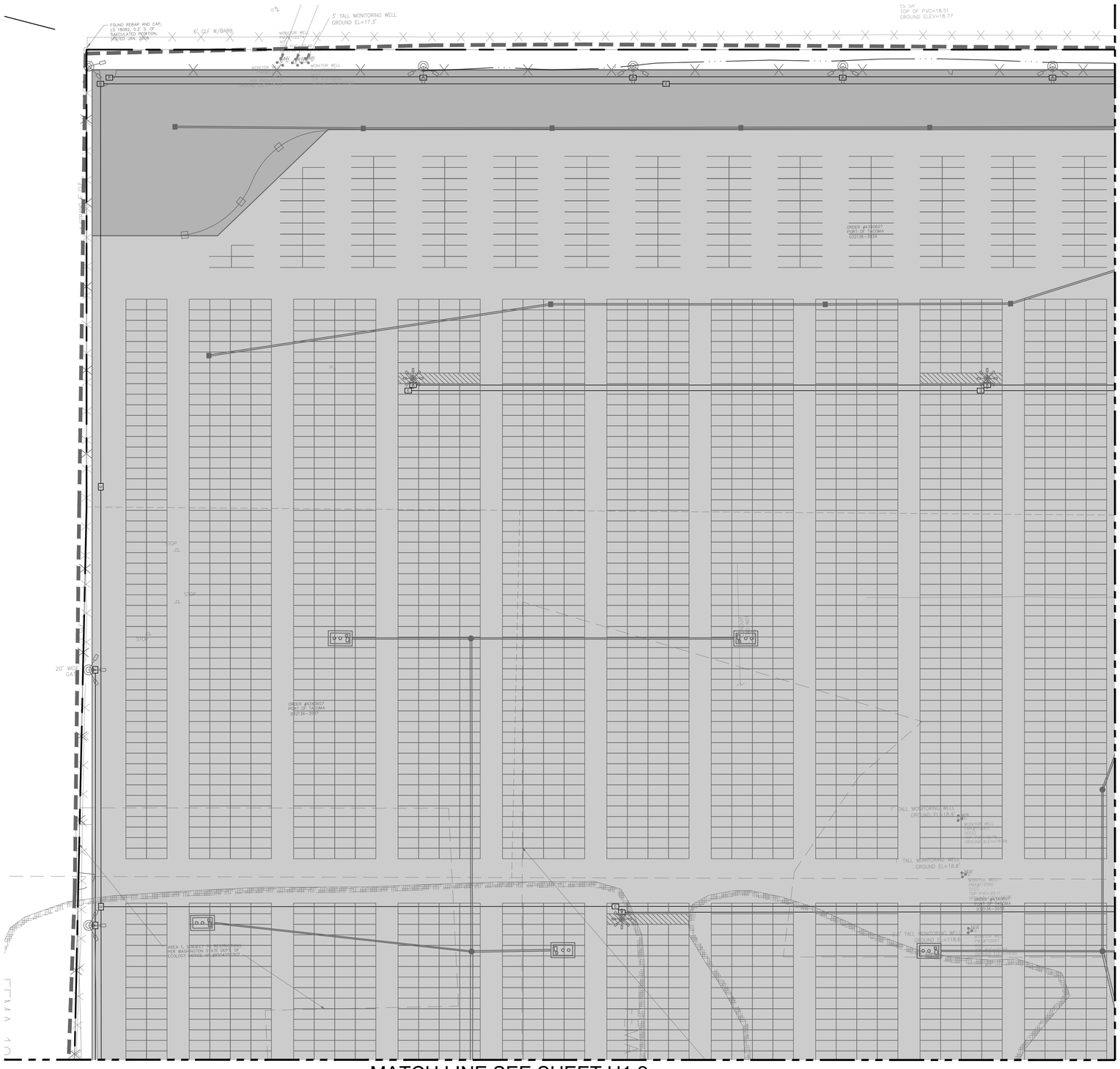

UTILITY NOTES

1. CONSTRUCT CLASS 200 PVC WATER PIPE, SEE PLAN FOR SIZE, SEE 2/U1.13 FOR TYPICAL TRENCH INSTALLATION
2. CONNECT TO EXISTING METER
3. CONSTRUCT IRRIGATION METER, SEE LANDSCAPE PLANS
4. CONSTRUCT BUILDING WATER CONNECTION WITHIN 5' OF BUILDING AND COORDINATE BUILDING ENTRY WITH BUILDING CONTRACTOR
5. CONSTRUCT PIPE CASING, MINIMUM LENGTH 15' FROM CENTERLINE OF TRACK ON BOTH SIDES. SEE 3/U1.17
6. CONSTRUCT PVC GRAVITY SANITARY SEWER, SEE PLAN FOR SIZE
7. CONSTRUCT PVC SANITARY SEWER FORCE MAIN (SSFM)
8. LOCATE 6" SEWER STUB TO WITHIN 5' OF BUILDING AND COORDINATE BUILDING ENTRY WITH BUILDING CONTRACTOR
9. CONSTRUCT GATE VALVE, SIZE TO MATCH WATER PIPE, SEE 5/U1.13
10. CONSTRUCT HDPE WATER SERVICE PIPE. SEE 2/U1.13 FOR TYPICAL TRENCH INSTALLATION.

NOTES

1. SIDE SEWER CONNECTION PERMITS ARE REQUIRED AT CONNECTIONS TO EXISTING SANITARY SEWERS. FOR QUESTIONS, CONTACT CITY OF TACOMA SITE DEVELOPMENT AT (253) 591-5760. TO APPLY FOR A PERMIT, GO TO TACOMAPERMITS.ORG
2. REFER TO SHEETS D1.0 THRU D1.5 FOR APPROXIMATE AREAS OF KNOWN REMNANT CONTAMINATION, REMEDIATED CONTAMINATION, AND BURIED CONCRETE FOUNDATIONS.
3. FIRE HYDRANT GATE VALVES ARE NOT SHOWN FOR CLARITY. SEE 1/U1.13 FOR VALVE LOCATION.
4. CONCRETE THRUST BLOCKS ARE NOT SHOWN FOR CLARITY. THRUST BLOCKS TO BE CONSTRUCTED PER 1/U1.15
5. SEE SHEETS U1.9–U1.12 FOR FIRE WATER LINE PROFILES.
6. SEE SHEETS U1.7–U1.8 FOR SANITARY SEWER PROFILE.
7. SEE SHEET U1.6 FOR DOMESTIC WATER INVERT ELEVATIONS.
8. SEE ELECTRICAL PLANS FOR POWER AND COMMUNICATION UTILITY SYSTEMS.
9. REFER TO SHEET U1.6 FOR SCHEDULE OF UTILITY LOCATIONS AND COMPONENTS.
10. METERS WILL BE PROVIDED AND INSTALLED BY TACOMA WATER, CONTRACTOR SHALL COORDINATE METER INSTALLATION AND CONNECT TO COMPLETED INSTALLATION.
11. ALL MANHOLES SHALL BE FITTED WITH PRECAST COMPRESSION GASKET CONNECTIONS OR FLEXIBLE BOOT CONNECTIONS.
12. CONSTRUCT SANITARY SEWER MANHOLES (SSMH) PER 1/U1.17

N

0 50 100 150
SCALE IN FEET

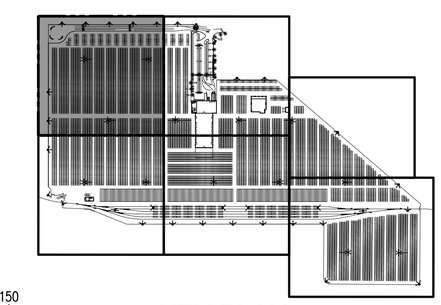

KEY PLAN
NTS

Port of Tacoma
P.O. BOX 1837 TACOMA, WA 98401 (253)383-5841

kpff
2407 North 31st Street, Suite 100
Tacoma, Washington 98407
(253) 396-0150 Fax (253) 396-0162

MARK:	REVISION:	BY:	APPR:	DATE:

STATE OF WASHINGTON
CHARLES MARK BIGELOW
32791
REGISTERED PROFESSIONAL ENGINEER

APPROVED:

CMB	5/7/2018	
CHECKED BY	DATE	
SWK	5/9/2018	
PROJ. ENGR	DATE	
DIRECTOR ENG.	DATE	

PRINTED BY: thelbig May 10, 2018
PORT ADDRESS: ONE SITCUM PLAZA
TACOMA WA, 98401-1837

PARCEL 77 AUTO IMPORT TERMINAL

UTILITY PLAN
AREA 1

TOWNSHIP: 21N	RANGE: 3E	SECTION: 36	
DAT–HRZ: W83-SF	VERT: PORT OF TACOMA BM#		
PARCEL: MULTIPLE	DRAWING SCALE: AS SHOWN		

U1.0

94 OF 163

CONT/CONS:	070770
M. ID:	201020.01
PHASE:	BID SET

THIS DRAWING IS THE PROPERTY OF THE PORT OF TACOMA AND SHALL NOT BE USED ON OTHER WORK, DISCLOSED, COPIED, IN WHOLE OR IN PART, WITHOUT WRITTEN PERMISSION

BINDING EDGE
PORT OF TACOMA FILE: C:\Users\thelbig\appdata\local\temp\AcPublish_8020\U1.0-U1.5 UTILITY PLANS

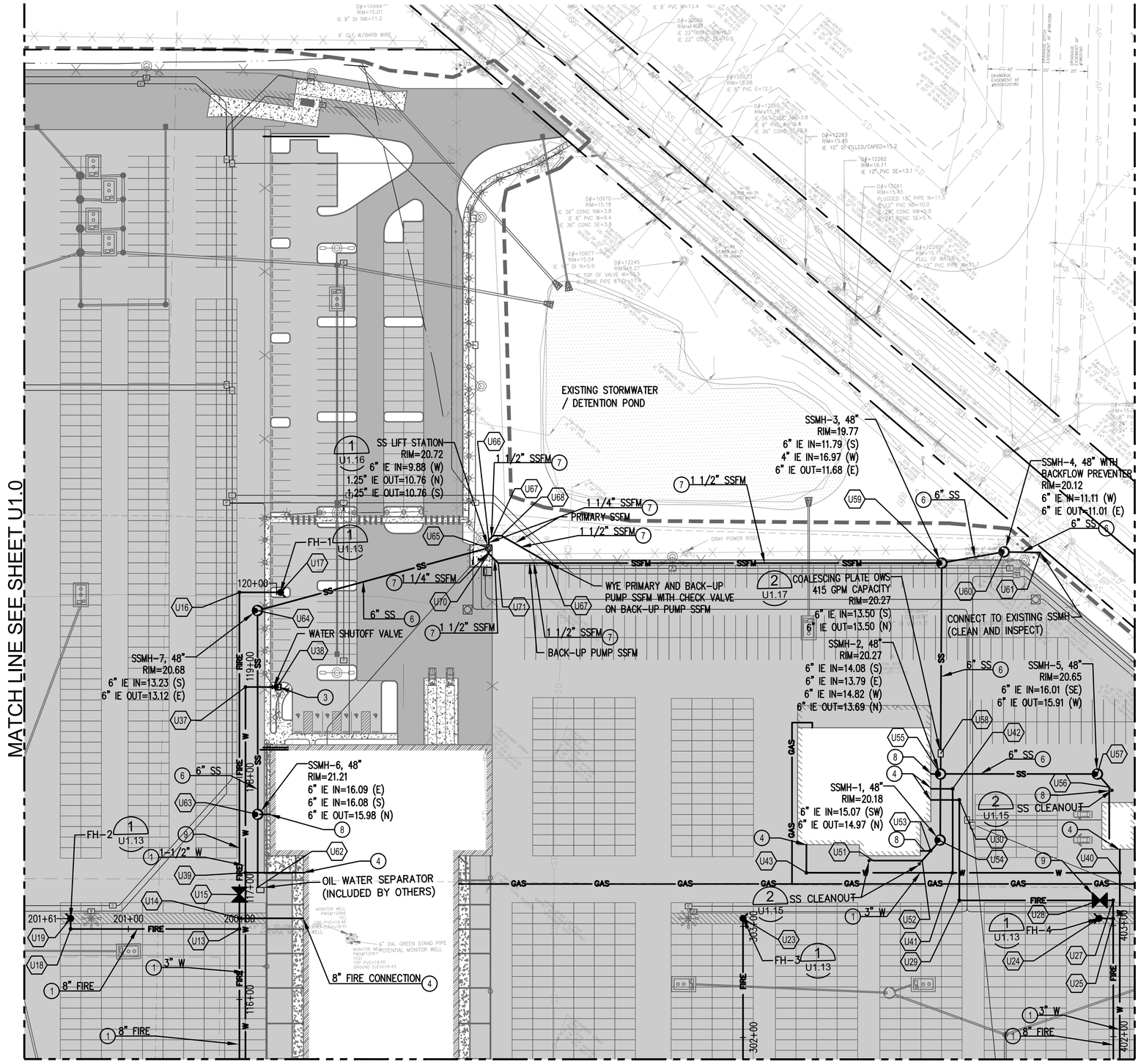

UTILITY NOTES

1. CONSTRUCT CLASS 200 PVC WATER PIPE, SEE PLAN FOR SIZE, SEE 2/U1.13 FOR TYPICAL TRENCH INSTALLATION
2. CONNECT TO EXISTING METER
3. CONSTRUCT IRRIGATION METER, SEE LANDSCAPE PLANS
4. CONSTRUCT BUILDING WATER CONNECTION WITHIN 5' OF BUILDING AND COORDINATE BUILDING ENTRY WITH BUILDING CONTRACTOR
5. CONSTRUCT PIPE CASING, MINIMUM LENGTH 15' FROM CENTERLINE OF TRACK ON BOTH SIDES. SEE 3/U1.17
6. CONSTRUCT PVC GRAVITY SANITARY SEWER, SEE PLAN FOR SIZE
7. CONSTRUCT PVC SANITARY SEWER FORCE MAIN (SSFM)
8. LOCATE 6" SEWER STUB TO WITHIN 5' OF BUILDING AND COORDINATE BUILDING ENTRY WITH BUILDING CONTRACTOR
9. CONSTRUCT GATE VALVE, SIZE TO MATCH WATER PIPE, SEE 5/U1.13
10. CONSTRUCT HDPE WATER SERVICE PIPE. SEE 2/U1.13 FOR TYPICAL TRENCH INSTALLATION.

NOTES

1. SIDE SEWER CONNECTION PERMITS ARE REQUIRED AT CONNECTIONS TO EXISTING SANITARY SEWERS. FOR QUESTIONS, CONTACT CITY OF TACOMA SITE DEVELOPMENT AT (253) 591-5760. TO APPLY FOR A PERMIT, GO TO TACOMAPERMITS.ORG
2. REFER TO SHEETS D1.0 THRU D1.5 FOR APPROXIMATE AREAS OF KNOWN REMNANT CONTAMINATION, REMEDIATED CONTAMINATION, AND BURIED CONCRETE FOUNDATIONS.
3. FIRE HYDRANT GATE VALVES ARE NOT SHOWN FOR CLARITY. SEE 1/U1.13 FOR VALVE LOCATION.
4. CONCRETE THRUST BLOCKS ARE NOT SHOWN FOR CLARITY. THRUST BLOCKS TO BE CONSTRUCTED PER 1/U1.15
5. SEE SHEETS U1.9–U1.12 FOR FIRE WATER LINE PROFILES.
6. SEE SHEETS U1.7–U1.8 FOR SANITARY SEWER PROFILE.
7. SEE SHEET U1.6 FOR DOMESTIC WATER INVERT ELEVATIONS.
8. SEE ELECTRICAL PLANS FOR POWER AND COMMUNICATION UTILITY SYSTEMS.
9. REFER TO SHEET U1.6 FOR SCHEDULE OF UTILITY LOCATIONS AND COMPONENTS.
10. METERS WILL BE PROVIDED AND INSTALLED BY TACOMA WATER, CONTRACTOR SHALL COORDINATE METER INSTALLATION AND CONNECT TO COMPLETED INSTALLATION.
11. ALL MANHOLES SHALL BE FITTED WITH PRECAST COMPRESSION GASKET CONNECTIONS OR FLEXIBLE BOOT CONNECTIONS.
12. CONSTRUCT SANITARY SEWER MANHOLES (SSMH) PER 1/U1.17

KEY PLAN
NTS

Port of Tacoma
P.O. BOX 1837 TACOMA, WA 98401 (253)383-5841

kpff
2407 North 31st Street, Suite 100
Tacoma, WA 98407-3200
(253) 396-0150 Fax (253) 396-0162

MARK:	REVISION:	BY:	APPR:	DATE:

CMB 5/7/2018
CHECKED BY DATE
SWK 5/9/2018
DIRECTOR ENG. DATE PROJ. ENGR DATE
PRINTED BY: thelbig May 10, 2018
PORT ADDRESS: ONE SITCUM PLAZA TACOMA WA, 98401-1837

APPROVED:

PARCEL 77 AUTO IMPORT TERMINAL

UTILITY PLAN
AREA 2

TOWNSHIP: 21N RANGE: 3E SECTION: 36
DAT–HRZ: W83-SF VERT: PORT OF TACOMA BM#
PARCEL: MULTIPLE DRAWING SCALE: AS SHOWN

U1.1

95 OF 163

CONT/CONS: 070770
M. ID: 201020.01
PHASE: BID SET

THIS DRAWING IS THE PROPERTY OF THE PORT OF TACOMA AND SHALL NOT BE USED ON OTHER WORK, DISCLOSED, COPIED, IN WHOLE OR IN PART, WITHOUT WRITTEN PERMISSION

BINDING EDGE
PORT OF TACOMA FILE: C:\Users\thelbig\appdata\local\temp\AcPublish_8020\U1.0-U1.5 UTILITY PLANS

BINDING EDGE

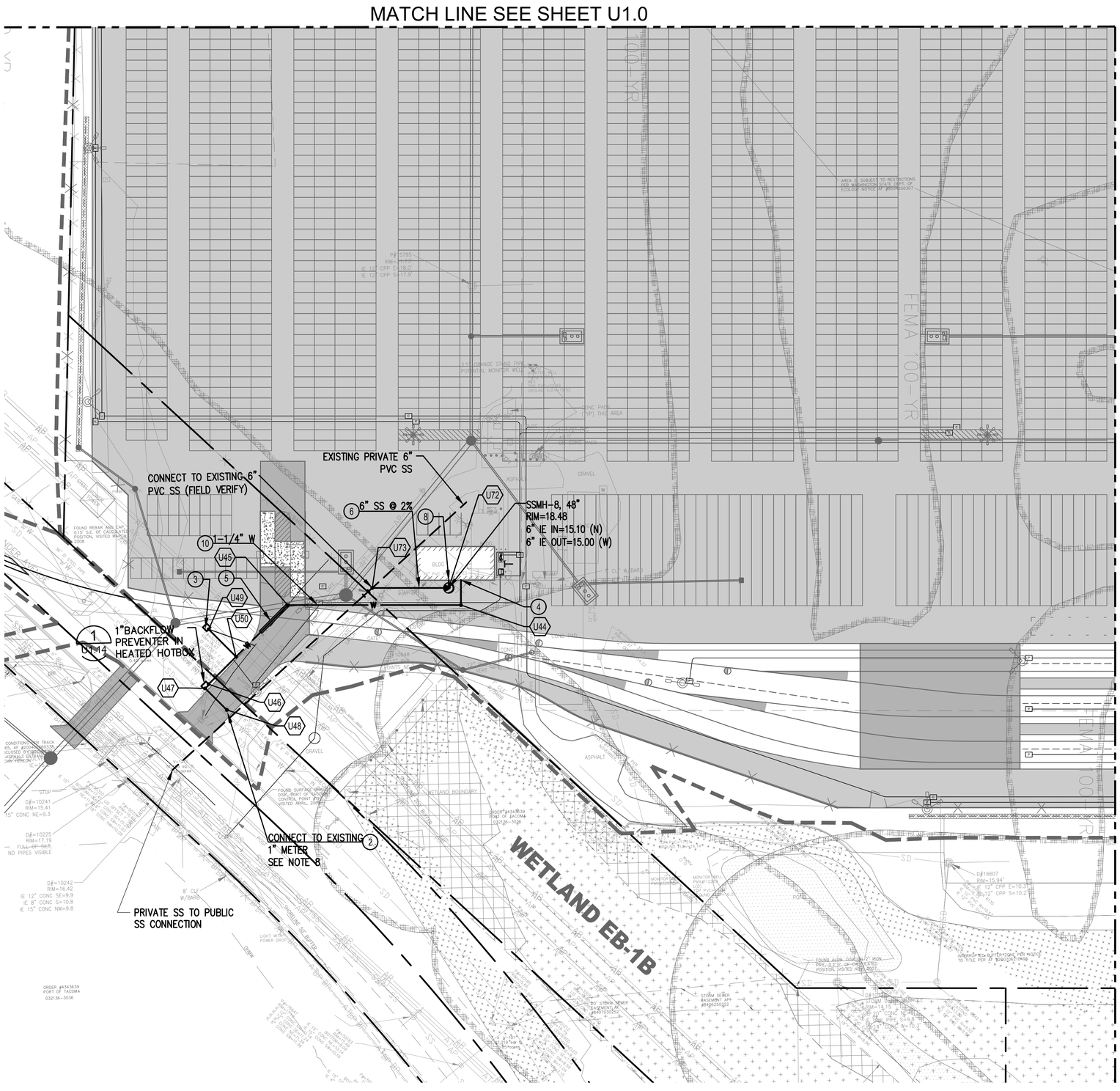

UTILITY NOTES

1. CONSTRUCT CLASS 200 PVC WATER PIPE, SEE PLAN FOR SIZE, SEE 2/U1.13 FOR TYPICAL TRENCH INSTALLATION
2. CONNECT TO EXISTING METER
3. CONSTRUCT IRRIGATION METER, SEE LANDSCAPE PLANS
4. CONSTRUCT BUILDING WATER CONNECTION WITHIN 5' OF BUILDING AND COORDINATE BUILDING ENTRY WITH BUILDING CONTRACTOR
5. CONSTRUCT PIPE CASING, MINIMUM LENGTH 15' FROM CENTERLINE OF TRACK ON BOTH SIDES. SEE 3/U1.17
6. CONSTRUCT PVC GRAVITY SANITARY SEWER, SEE PLAN FOR SIZE
7. CONSTRUCT PVC SANITARY SEWER FORCE MAIN (SSFM)
8. LOCATE 6" SEWER STUB TO WITHIN 5' OF BUILDING AND COORDINATE BUILDING ENTRY WITH BUILDING CONTRACTOR
9. CONSTRUCT GATE VALVE, SIZE TO MATCH WATER PIPE, SEE 5/U1.13
10. CONSTRUCT HDPE WATER SERVICE PIPE. SEE 2/U1.13 FOR TYPICAL TRENCH INSTALLATION.

NOTES

1. SIDE SEWER CONNECTION PERMITS ARE REQUIRED AT CONNECTIONS TO EXISTING SANITARY SEWERS. FOR QUESTIONS, CONTACT CITY OF TACOMA SITE DEVELOPMENT AT (253) 591-5760. TO APPLY FOR A PERMIT, GO TO TACOMAPERMITS.ORG
2. REFER TO SHEETS D1.0 THRU D1.5 FOR APPROXIMATE AREAS OF KNOWN REMNANT CONTAMINATION, REMEDIATED CONTAMINATION, AND BURIED CONCRETE FOUNDATIONS.
3. FIRE HYDRANT GATE VALVES ARE NOT SHOWN FOR CLARITY. SEE 1/U1.13 FOR VALVE LOCATION.
4. CONCRETE THRUST BLOCKS ARE NOT SHOWN FOR CLARITY. THRUST BLOCKS TO BE CONSTRUCTED PER 1/U1.15
5. SEE SHEETS U1.9–U1.12 FOR FIRE WATER LINE PROFILES.
6. SEE SHEETS U1.7–U1.8 FOR SANITARY SEWER PROFILE.
7. SEE SHEET U1.6 FOR DOMESTIC WATER INVERT ELEVATIONS.
8. SEE ELECTRICAL PLANS FOR POWER AND COMMUNICATION UTILITY SYSTEMS.
9. REFER TO SHEET U1.6 FOR SCHEDULE OF UTILITY LOCATIONS AND COMPONENTS.
10. METERS WILL BE PROVIDED AND INSTALLED BY TACOMA WATER, CONTRACTOR SHALL COORDINATE METER INSTALLATION AND CONNECT TO COMPLETED INSTALLATION.
11. ALL MANHOLES SHALL BE FITTED WITH PRECAST COMPRESSION GASKET CONNECTIONS OR FLEXIBLE BOOT CONNECTIONS.
12. CONSTRUCT SANITARY SEWER MANHOLES (SSMH) PER 1/U1.17

N

0 50 100 150
SCALE IN FEET

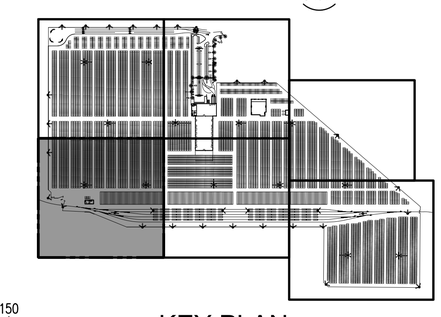

KEY PLAN
NTS

Port of Tacoma
P.O. BOX 1837 TACOMA, WA 98401 (253)383-5841

kpff
2407 North 31st Street, Suite 100
Tacoma, Washington 98407
(253) 396-0150 Fax (253) 396-0162

MARK:	REVISION:	BY:	APPR:	DATE:

APPROVED:

CMB	5/7/2018	
CHECKED BY	DATE	
SWK	5/9/2018	
DIRECTOR ENG.	DATE	PROJ. ENGR

PRINTED BY: thelbig May 10, 2018

PORT ADDRESS: ONE SITCUM PLAZA TACOMA WA, 98401-1837

PARCEL 77 AUTO IMPORT TERMINAL

UTILITY PLAN
AREA 3

U1.2
96 OF 163

CONT/CONS:	070/70	TOWNSHIP: 21N	RANGE: 3E
M. ID:	201020.01	DAT–HRZ: W83-SF	VERT: PORT OF TACOMA BM#
PHASE:	BID SET	PARCEL: MULTIPLE	DRAWING SCALE: AS SHOWN

SECTION: 36

THIS DRAWING IS THE PROPERTY OF THE PORT OF TACOMA AND SHALL NOT BE USED ON OTHER WORK, DISCLOSED, COPIED, IN WHOLE OR IN PART, WITHOUT WRITTEN PERMISSION

PORT OF TACOMA FILE: C:\Users\thelbig\appdata\local\temp\AcPublish_8020\U1.0-U1.5 UTILITY PLANS

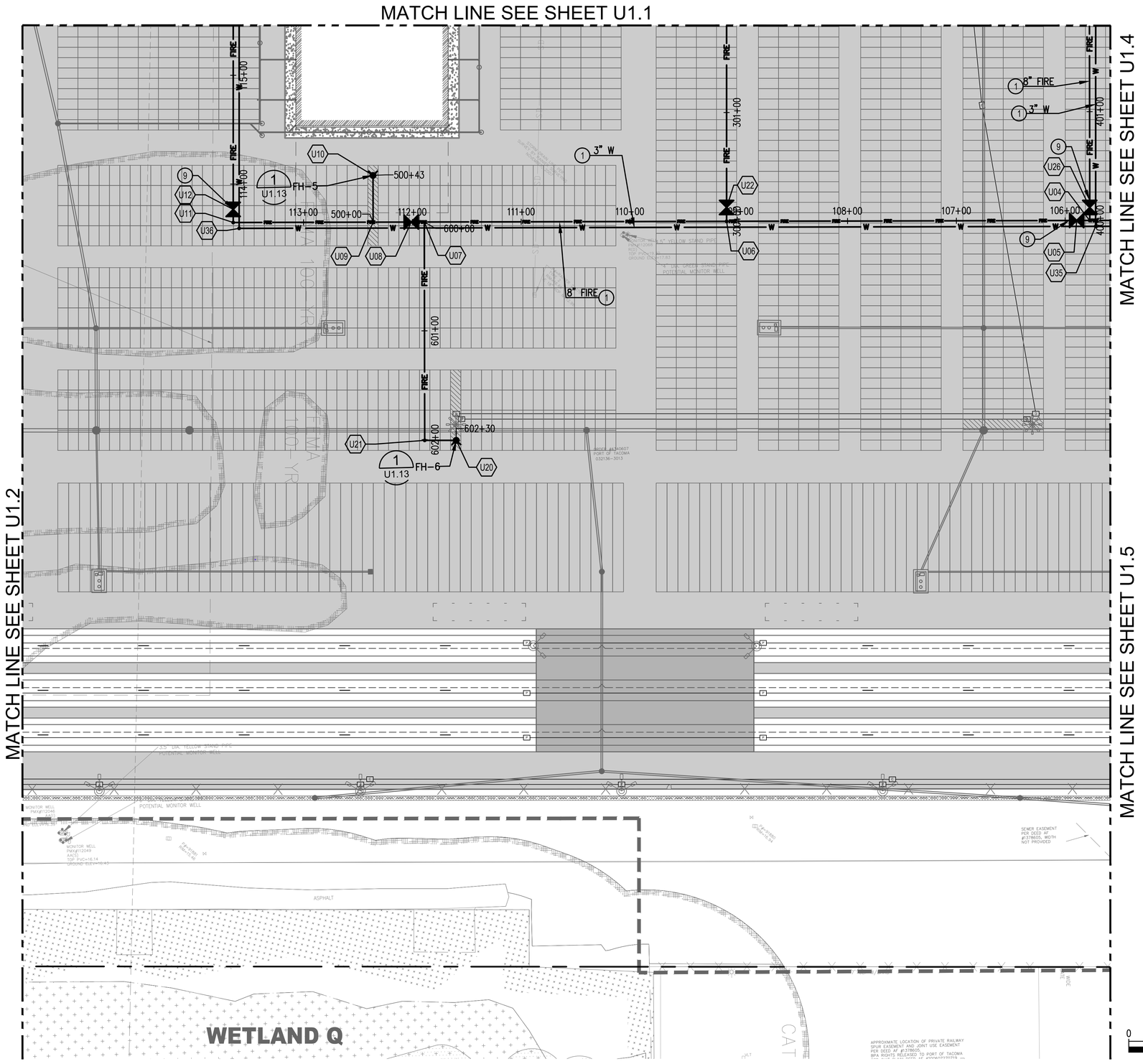

UTILITY NOTES

1. CONSTRUCT CLASS 200 PVC WATER PIPE, SEE PLAN FOR SIZE, SEE 2/U1.13 FOR TYPICAL TRENCH INSTALLATION
2. CONNECT TO EXISTING METER
3. CONSTRUCT IRRIGATION METER, SEE LANDSCAPE PLANS
4. CONSTRUCT BUILDING WATER CONNECTION WITHIN 5' OF BUILDING AND COORDINATE BUILDING ENTRY WITH BUILDING CONTRACTOR
5. CONSTRUCT PIPE CASING, MINIMUM LENGTH 15' FROM CENTERLINE OF TRACK ON BOTH SIDES. SEE 3/U1.17
6. CONSTRUCT PVC GRAVITY SANITARY SEWER, SEE PLAN FOR SIZE
7. CONSTRUCT PVC SANITARY SEWER FORCE MAIN (SSFM)
8. LOCATE 6" SEWER STUB TO WITHIN 5' OF BUILDING AND COORDINATE BUILDING ENTRY WITH BUILDING CONTRACTOR
9. CONSTRUCT GATE VALVE, SIZE TO MATCH WATER PIPE, SEE 5/U1.13
10. CONSTRUCT HDPE WATER SERVICE PIPE. SEE 2/U1.13 FOR TYPICAL TRENCH INSTALLATION.

NOTES

1. SIDE SEWER CONNECTION PERMITS ARE REQUIRED AT CONNECTIONS TO EXISTING SANITARY SEWERS. FOR QUESTIONS, CONTACT CITY OF TACOMA SITE DEVELOPMENT AT (253) 591-5760. TO APPLY FOR A PERMIT, GO TO TACOMAPERMITS.ORG
2. REFER TO SHEETS D1.0 THRU D1.5 FOR APPROXIMATE AREAS OF KNOWN REMNANT CONTAMINATION, REMEDIATED CONTAMINATION, AND BURIED CONCRETE FOUNDATIONS.
3. FIRE HYDRANT GATE VALVES ARE NOT SHOWN FOR CLARITY. SEE 1/U1.13 FOR VALVE LOCATION.
4. CONCRETE THRUST BLOCKS ARE NOT SHOWN FOR CLARITY. THRUST BLOCKS TO BE CONSTRUCTED PER 1/U1.15
5. SEE SHEETS U1.9–U1.12 FOR FIRE WATER LINE PROFILES.
6. SEE SHEETS U1.7–U1.8 FOR SANITARY SEWER PROFILE.
7. SEE SHEET U1.6 FOR DOMESTIC WATER INVERT ELEVATIONS.
8. SEE ELECTRICAL PLANS FOR POWER AND COMMUNICATION UTILITY SYSTEMS.
9. REFER TO SHEET U1.6 FOR SCHEDULE OF UTILITY LOCATIONS AND COMPONENTS.
10. METERS WILL BE PROVIDED AND INSTALLED BY TACOMA WATER, CONTRACTOR SHALL COORDINATE METER INSTALLATION AND CONNECT TO COMPLETED INSTALLATION.
11. ALL MANHOLES SHALL BE FITTED WITH PRECAST COMPRESSION GASKET CONNECTIONS OR FLEXIBLE BOOT CONNECTIONS.
12. CONSTRUCT SANITARY SEWER MANHOLES (SSMH) PER 1/U1.17

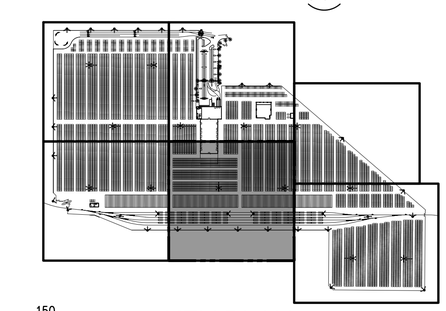

KEY PLAN
NTS

Port of Tacoma
P.O. BOX 1837 TACOMA, WA 98401 (253)383-5841

kpff
2407 North 31st Street, Suite 100
Tacoma, Washington 98407
(253) 396-0130 Fax (253) 396-0162

MARK:	REVISION:	BY:	APPR:	DATE:

PARCEL 77 AUTO IMPORT TERMINAL

UTILITY PLAN
AREA 4

APPROVED:

CMB	5/7/2018		
CHECKED BY	DATE		
SWK	5/9/2018		
DIRECTOR ENG.	DATE	PROJ. ENGR	DATE
PRINTED BY: thelbig May 10, 2018			
PORT ADDRESS: ONE SITCUM PLAZA			
TACOMA WA, 98401-1837			

U1.3
97 OF 163

CONT/CONS:	070770	TOWNSHIP: 21N	RANGE: 3E	SECTION: 36	
M. ID:	201020.01	DAT–HRZ: W83-SF	VERT: PORT OF TACOMA BM#		
PHASE:	BID SET	PARCEL: MULTIPLE	DRAWING SCALE: AS SHOWN		

THIS DRAWING IS THE PROPERTY OF THE PORT OF TACOMA AND SHALL NOT BE USED ON OTHER WORK, DISCLOSED, COPIED, IN WHOLE OR IN PART, WITHOUT WRITTEN PERMISSION

BINDING EDGE
PORT OF TACOMA FILE: C:\Users\thelbig\appdata\local\temp\AcPublish_8020\U1.0-U1.5 UTILITY PLANS

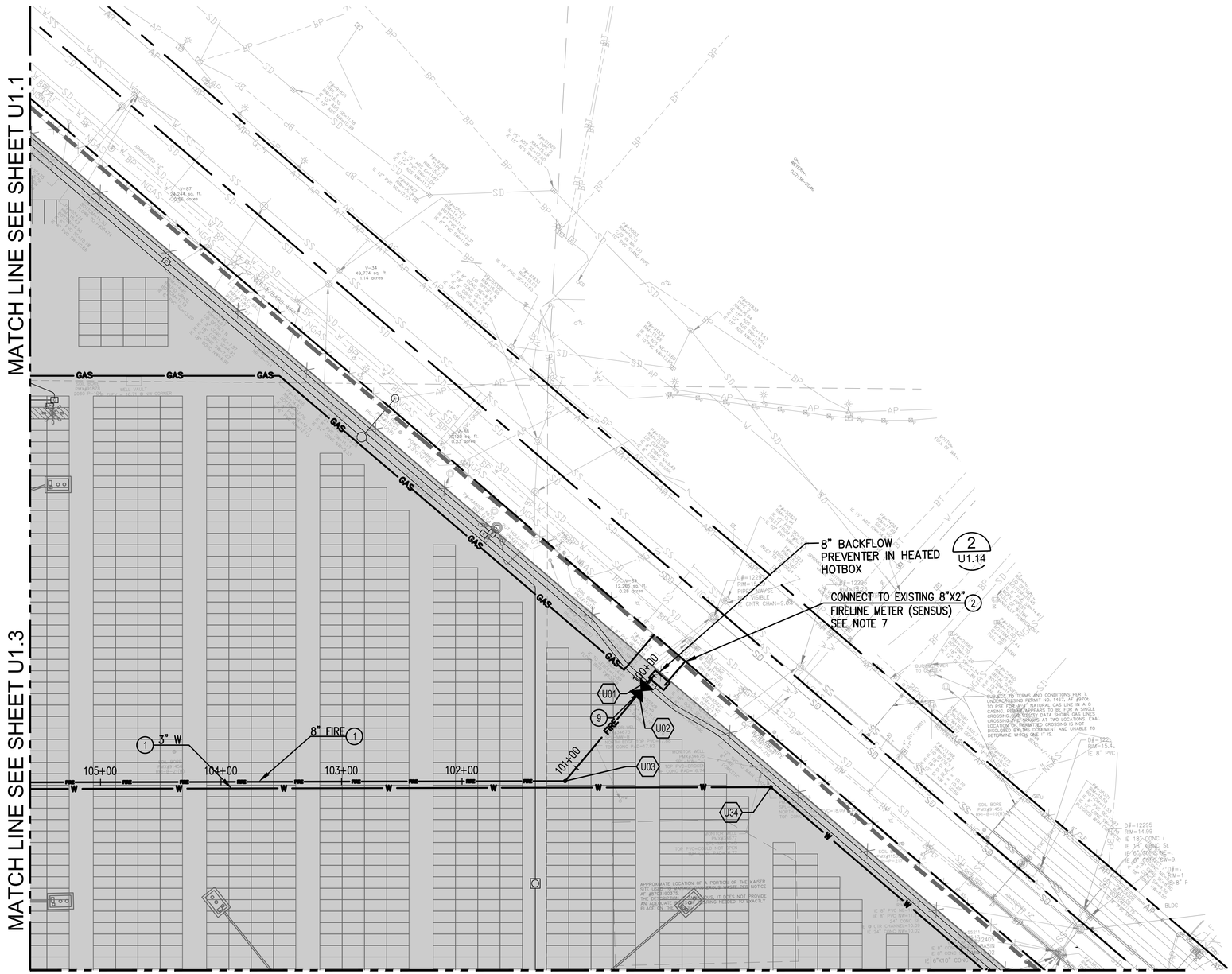

UTILITY NOTES

1. CONSTRUCT CLASS 200 PVC WATER PIPE, SEE PLAN FOR SIZE, SEE 2/U1.13 FOR TYPICAL TRENCH INSTALLATION
2. CONNECT TO EXISTING METER
3. CONSTRUCT IRRIGATION METER, SEE LANDSCAPE PLANS
4. CONSTRUCT BUILDING WATER CONNECTION WITHIN 5' OF BUILDING AND COORDINATE BUILDING ENTRY WITH BUILDING CONTRACTOR
5. CONSTRUCT PIPE CASING, MINIMUM LENGTH 15' FROM CENTERLINE OF TRACK ON BOTH SIDES. SEE 3/U1.17
6. CONSTRUCT PVC GRAVITY SANITARY SEWER, SEE PLAN FOR SIZE
7. CONSTRUCT PVC SANITARY SEWER FORCE MAIN (SSFM)
8. LOCATE 6" SEWER STUB TO WITHIN 5' OF BUILDING AND COORDINATE BUILDING ENTRY WITH BUILDING CONTRACTOR
9. CONSTRUCT GATE VALVE, SIZE TO MATCH WATER PIPE, SEE 5/U1.13
10. CONSTRUCT HDPE WATER SERVICE PIPE. SEE 2/U1.13 FOR TYPICAL TRENCH INSTALLATION.

NOTES

1. SIDE SEWER CONNECTION PERMITS ARE REQUIRED AT CONNECTIONS TO EXISTING SANITARY SEWERS. FOR QUESTIONS, CONTACT CITY OF TACOMA SITE DEVELOPMENT AT (253) 591-5760. TO APPLY FOR A PERMIT, GO TO TACOMAPERMITS.ORG
2. REFER TO SHEETS D1.0 THRU D1.5 FOR APPROXIMATE AREAS OF KNOWN REMNANT CONTAMINATION, REMEDIATED CONTAMINATION, AND BURIED CONCRETE FOUNDATIONS.
3. FIRE HYDRANT GATE VALVES ARE NOT SHOWN FOR CLARITY. SEE 1/U1.13 FOR VALVE LOCATION.
4. CONCRETE THRUST BLOCKS ARE NOT SHOWN FOR CLARITY. THRUST BLOCKS TO BE CONSTRUCTED PER 1/U1.15
5. SEE SHEETS U1.9–U1.12 FOR FIRE WATER LINE PROFILES.
6. SEE SHEETS U1.7–U1.8 FOR SANITARY SEWER PROFILE.
7. SEE SHEET U1.6 FOR DOMESTIC WATER INVERT ELEVATIONS.
8. SEE ELECTRICAL PLANS FOR POWER AND COMMUNICATION UTILITY SYSTEMS.
9. REFER TO SHEET U1.6 FOR SCHEDULE OF UTILITY LOCATIONS AND COMPONENTS.
10. METERS WILL BE PROVIDED AND INSTALLED BY TACOMA WATER, CONTRACTOR SHALL COORDINATE METER INSTALLATION AND CONNECT TO COMPLETED INSTALLATION.
11. ALL MANHOLES SHALL BE FITTED WITH PRECAST COMPRESSION GASKET CONNECTIONS OR FLEXIBLE BOOT CONNECTIONS.
12. CONSTRUCT SANITARY SEWER MANHOLES (SSMH) PER 1/U1.17

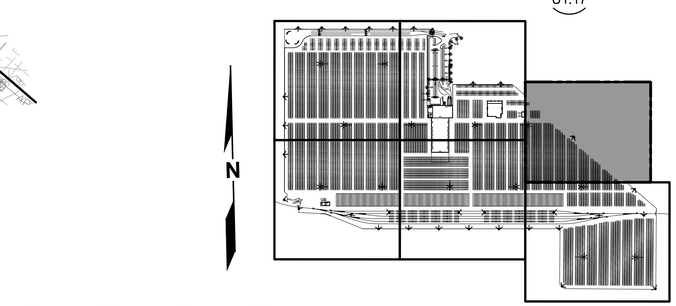

KEY PLAN
NTS

0 50 100 150
SCALE IN FEET

Port of Tacoma
P.O. BOX 1837 TACOMA, WA 98401 (253)383-5841

kpff
2407 North 31st Street, Suite 100
Tacoma, Washington 98407
(253) 396-0150 Fax (253) 396-0162

MARK:	REVISION:	BY:	APPR:	DATE:

MANDE LINCOLEY
STATE OF WASHINGTON
32791
REGISTERED PROFESSIONAL ENGINEER

CMB	5/7/2018		
CHECKED BY	DATE		
SWK	5/9/2018		
PROJ. ENGR	DATE		

APPROVED:

DIRECTOR, ENG. DATE

PRINTED BY: thelbig May 10, 2018

PORT ADDRESS: ONE SITCUM PLAZA TACOMA WA, 98401-1837

PARCEL 77 AUTO IMPORT TERMINAL

UTILITY PLAN
AREA 5

CONT/CONS: 070770	TOWNSHIP: 21N	RANGE: 3E	SECTION: 36
M. ID: 201020.01	DAT–HRZ: W83-SF	VERT: PORT OF TACOMA BM#	
PHASE: BID SET	PARCEL: MULTIPLE	DRAWING SCALE: AS SHOWN	

U1.4
98 OF 163

THIS DRAWING IS THE PROPERTY OF THE PORT OF TACOMA AND SHALL NOT BE USED ON OTHER WORK, DISCLOSED, COPIED, IN WHOLE OR IN PART, WITHOUT WRITTEN PERMISSION

BINDING EDGE
PORT OF TACOMA FILE: C:\Users\thelbig\appdata\local\temp\AcPublish_8020\U1.0-U1.5 UTILITY PLANS

BINDING EDGE

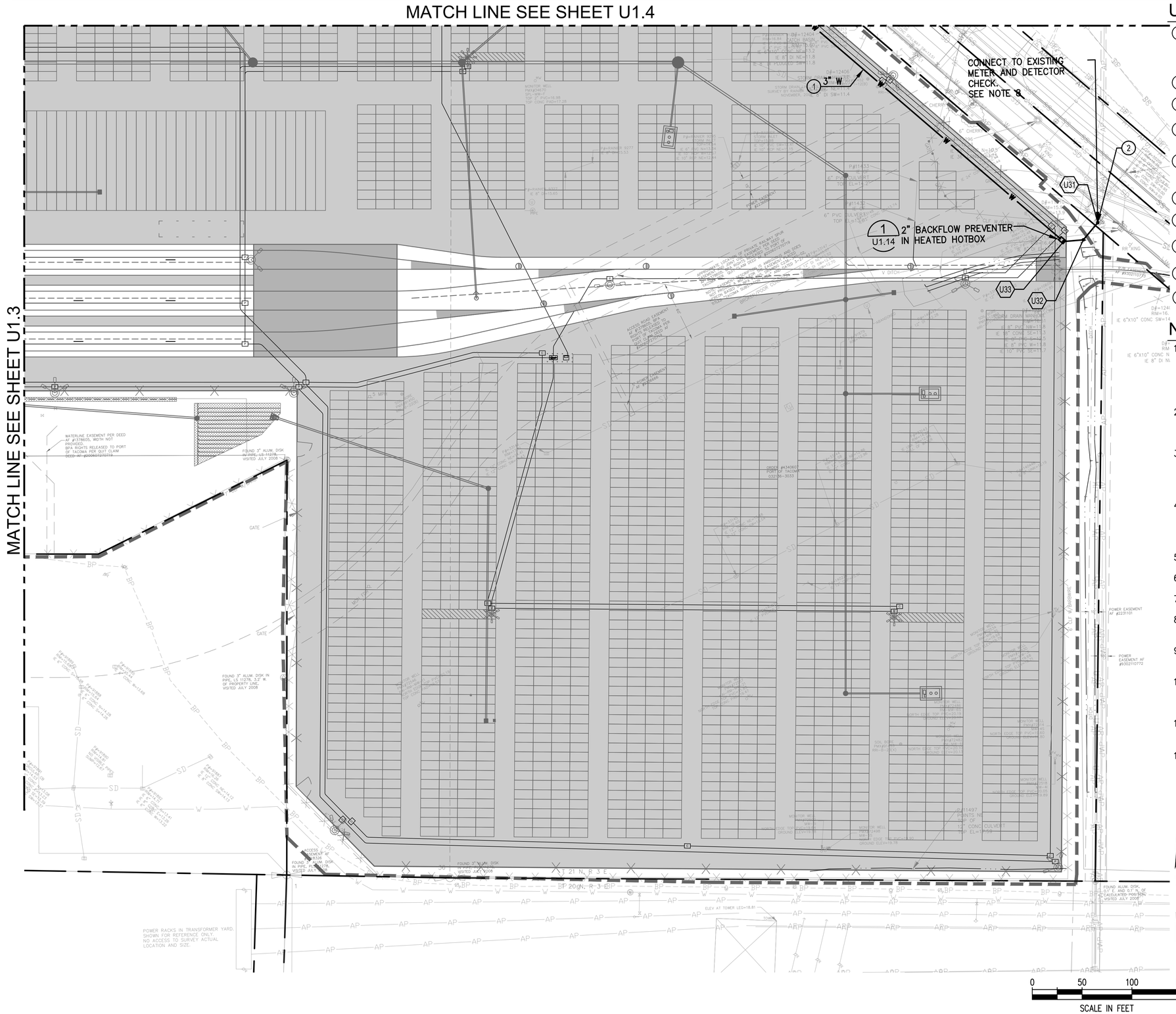

UTILITY NOTES

1. CONSTRUCT CLASS 200 PVC WATER PIPE, SEE PLAN FOR SIZE, SEE 2/U1.13 FOR TYPICAL TRENCH INSTALLATION
2. CONNECT TO EXISTING METER
3. CONSTRUCT IRRIGATION METER, SEE LANDSCAPE PLANS
4. CONSTRUCT BUILDING WATER CONNECTION WITHIN 5' OF BUILDING AND COORDINATE BUILDING ENTRY WITH BUILDING CONTRACTOR
5. CONSTRUCT PIPE CASING, MINIMUM LENGTH 15' FROM CENTERLINE OF TRACK ON BOTH SIDES. SEE 3/U1.17
6. CONSTRUCT PVC GRAVITY SANITARY SEWER, SEE PLAN FOR SIZE
7. CONSTRUCT PVC SANITARY SEWER FORCE MAIN (SSFM)
8. LOCATE 6" SEWER STUB TO WITHIN 5' OF BUILDING AND COORDINATE BUILDING ENTRY WITH BUILDING CONTRACTOR
9. CONSTRUCT GATE VALVE, SIZE TO MATCH WATER PIPE, SEE 5/U1.
10. CONSTRUCT HDPE WATER SERVICE PIPE. SEE 2/U1.13 FOR TYPICAL TRENCH INSTALLATION.

NOTES

1. SIDE SEWER CONNECTION PERMITS ARE REQUIRED AT CONNECTIONS TO EXISTING SANITARY SEWERS. FOR QUESTIONS, CONTACT CITY OF TACOMA SITE DEVELOPMENT AT (253) 591-5760. TO APPLY FOR A PERMIT, GO TO TACOMAPERMITS.ORG
2. REFER TO SHEETS D1.0 THRU D1.5 FOR APPROXIMATE AREAS OF KNOWN REMNANT CONTAMINATION, REMEDIATED CONTAMINATION, AND BURIED CONCRETE FOUNDATIONS.
3. FIRE HYDRANT GATE VALVES ARE NOT SHOWN FOR CLARITY. SEE 1/U1.13 FOR VALVE LOCATION.
4. CONCRETE THRUST BLOCKS ARE NOT SHOWN FOR CLARITY. THRUST BLOCKS TO BE CONSTRUCTED PER 1/U1.15
5. SEE SHEETS U1.9–U1.12 FOR FIRE WATER LINE PROFILES.
6. SEE SHEETS U1.7–U1.8 FOR SANITARY SEWER PROFILE.
7. SEE SHEET U1.6 FOR DOMESTIC WATER INVERT ELEVATIONS.
8. SEE ELECTRICAL PLANS FOR POWER AND COMMUNICATION UTILITY SYSTEMS.
9. REFER TO SHEET U1.6 FOR SCHEDULE OF UTILITY LOCATIONS AND COMPONENTS.
10. METERS WILL BE PROVIDED AND INSTALLED BY TACOMA WATER, CONTRACTOR SHALL COORDINATE METER INSTALLATION AND CONNECT TO COMPLETED INSTALLATION.
11. ALL MANHOLES SHALL BE FITTED WITH PRECAST COMPRESSION GASKET CONNECTIONS OR FLEXIBLE BOOT CONNECTIONS.
12. CONSTRUCT SANITARY SEWER MANHOLES (SSMH) PER 1/U1.17

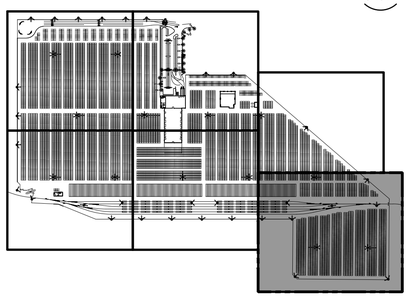

KEY PLAN
NTS

Port of Tacoma
P.O. BOX 1837 TACOMA, WA 98401 (253)383-5841

kpff
2407 North 31st Street, Suite 100
Tacoma, Washington 98407
(253) 396-0130 Fax (253) 396-0162

MARK:	REVISION:	BY:	APPR:	DATE:

MADELINE KINGSLEY
STATE OF WASHINGTON
32791
REGISTERED PROFESSIONAL ENGINEER
5/9/2018

APPROVED:

CMB	5/7/2018	
CHECKED BY	DATE	
SWK	5/9/2018	
DIRECTOR ENG.	DATE	PROJ. ENGR DATE

PRINTED BY: thelbig May 10, 2018
PORT ADDRESS: ONE SITCUM PLAZA TACOMA WA, 98401-1837

PARCEL 77 AUTO IMPORT TERMINAL

UTILITY PLAN
AREA 6

TOWNSHIP: 21N	RANGE: 3E	SECTION: 36	
DAT–HRZ: W83-SF	VERT: PORT OF TACOMA BM#		
PARCEL: MULTIPLE	DRAWING SCALE: AS SHOWN		

U1.5
99 OF 163

CONT/CONS:	070770
M. ID:	201020.01
PHASE:	BID SET

THIS DRAWING IS THE PROPERTY OF THE PORT OF TACOMA AND SHALL NOT BE USED ON OTHER WORK, DISCLOSED, COPIED, IN WHOLE OR IN PART, WITHOUT WRITTEN PERMISSION

PORT OF TACOMA FILE: C:\Users\thelbig\appdata\local\temp\AcPublish_8020\U1.0-U1.5 UTILITY PLANS

FIRE WATER LOCATION TABLE

POINT	DESCRIPTION	NORTHING	EASTING	SHEET
U1	BACKFLOW OUTLET	708273.9292	1177068.9578	U1.4
U2	GATE VALVE	708264.9332	1177061.0160	U1.4
U3	45 DEGREE ELBOW	708191.1258	1176995.8576	U1.4
U4	TEE	708201.1265	1176533.0372	U1.3
U5	GATE VALVE	708201.3867	1176520.9959	U1.3
U6	TEE	708208.3374	1176199.3210	U1.3
U7	TEE	708214.3497	1175921.5012	U1.3
U8	GATE VALVE	708214.5997	1175909.5071	U1.3
U9	TEE	708215.3562	1175874.4975	U1.3
U10	FH-5	708258.3102	1175875.4257	U1.3
U11	90 DEGREE ELBOW	708218.1345	1175745.9231	U1.3
U12	GATE VALVE	708230.1754	1175746.2118	U1.3
U13	TEE	708516.8167	1175753.0838	U1.1
U14	TEE	708526.3890	1175753.3133	U1.1
U15	GATE VALVE	708547.8078	1175753.8268	U1.1
U16	90 DEGREE ELBOW	708819.8711	1175760.3493	U1.1
U17	FH-1	708818.9864	1175797.2502	U1.1
U18	90 DEGREE ELBOW	708520.4596	1175601.1299	U1.1
U19	FH-2	708529.9506	1175601.3656	U1.1
U20	FH-6	708013.0466	1175946.0677	U1.3
U21	90 DEGREE ELBOW	708013.7416	1175917.0760	U1.3
U22	GATE VALVE	708221.0787	1176199.6264	U1.3
U23	FH-3	708515.4447	1176206.6836	U1.1
U24	FH-4	708507.7631	1176527.0916	U1.1
U25	TEE	708507.4508	1176539.9155	U1.1
U26	GATE VALVE	708213.0791	1176533.3056	U1.3
U27	90 DEGREE ELBOW	708523.7015	1176540.2804	U1.1
U28	GATE VALVE	708523.9891	1176528.2840	U1.1
U29	90 DEGREE ELBOW	708527.0209	1176401.8250	U1.1
U30	90 DEGREE ELBOW	708617.4471	1176403.9929	U1.1

WATER LOCATION TABLE

POINT	DESCRIPTION	NORTHING	EASTING	INVERT ELEVATION	FINISH GRADE	SHEET
U31	CONNECT TO METER	707821.3030	1177620.9426	TO BE FIELD VERIFIED	EX GRADE 15.97 ±	U1.5
U32	45 DEGREE ELBOW	707804.4791	1177606.0689	16.09	18.84	U1.5
U33	BACKFLOW INLET	707803.2603	1177586.2587	15.93	18.68	U1.5
U34	45 DEGREE ELBOW	708182.0201	1177166.3685	16.60	19.35	U1.4
U35	TEE	708195.5915	1176538.2979	16.63	19.38	U1.3
U36	90 DEGREE ELBOW	708212.5982	1175751.2443	16.68	19.43	U1.3
U37	90 DEGREE ELBOW	708734.5074	1175763.7676	17.37	20.12	U1.1
U38	IRRIGATION METER	708733.8541	1175790.6799	17.39	20.14	U1.1
U39	TEE W/REDUCER	708567.3424	1175759.7565	17.59	20.34	U1.1
U40	TEE	708548.1926	1176546.8848	17.32	20.07	U1.1
U41	TEE	708551.9831	1176396.4218	17.18	19.93	U1.1
U42	90 DEGREE ELBOW	708627.5880	1176398.2343	17.54	20.29	U1.1
U43	90 DEGREE ELBOW	708555.1903	1176264.7246	17.28	20.03	U1.1
U44	90 DEGREE ELBOW	707898.1061	1174955.2926	15.42	18.17	U1.2
U45	45 DEGREE ELBOW	707901.8447	1174799.3477	15.69	18.44	U1.2
U46	CONNCET TO BACKFLOW PREVENTER	707832.3680	1174726.4579	14.85	17.60	U1.2
U47	CONNECT TO BACKFLOW PREVENTER	707828.6255	1174723.3365	14.85	17.60	U1.2
U48	CONNECT TO EX WATER METER	707810.4228	1174740.6868	14.85	17.60	U1.2
U49	IRRIGATION METER	707881.7153	1174727.6619	15.45	18.20	U1.2
U50	TEE	707856.4606	1174751.7340	15.45	18.20	U1.2

SANITARY SEWER LOCATION TABLE

POINT	DESCRIPTION	NORTHING	EASTING	SHEET
U51	CLEANOUT	708564.7082	1176325.2885	U1.1
U52	45 DEGREE ELBOW WITH CLEANOUT	708563.6499	1176369.2625	U1.1
U53	WYE	708572.1523	1176377.0519	U1.1
U54	SSMH-1	708581.7269	1176385.8576	U1.1
U55	SSMH-2	708641.1786	1176387.6615	U1.1
U56	45 DEGREE ELBOW WITH CLEANOUT	708625.7372	1176539.1825	U1.1
U57	SSMH-5	708637.7927	1176528.8926	U1.1
U58	OIL WATER SEPARATOR	708659.7891	1176388.2190	U1.1
U59	SSMH-3	708831.0356	1176393.3492	U1.1
U60	SSMH-4	708839.8617	1176449.6517	U1.1
U61	EX SSMH	708838.4743	1176482.2614	U1.1
U62	OIL WATER SEPARATOR	708553.8444	1175770.4432	U1.1
U63	SSMH-6	708619.6102	1175772.0199	U1.1
U64	SSMH-7	708803.1232	1175776.2166	U1.1
U65	SS LIFT STATION	708854.2847	1175985.8201	U1.1
U66	45 DEGREE ELBOW W/ REDUCER	708861.5871	1175985.9951	U1.1
U67	45 DEGREE ELBOW	708865.3568	1175989.9500	U1.1
U68	30 DEGREE ELBOW	708865.1759	1175997.4984	U1.1
U69	30 DEGREE WYE	708839.5171	1176039.5783	U1.1
U70	45 DEGREE ELBOW W/ REDUCER	708849.2862	1175985.6993	U1.1
U71	45 DEGREE ELBOW	708840.6191	1175993.9576	U1.1
U72	SSMH-8	707913.7780	1174944.6652	U1.2
U73	CONNECT TO EX SEWER	707915.4285	1174875.8235	U1.2

Port of Tacoma
P.O. BOX 1837 TACOMA, WA 98401 (253)383-5841

kpff
2407 North 31st Street, Suite 100
Tacoma, WA 98407-3220
(253) 396-0130 Fax (253) 396-0162

MARK: REVISION: BY: APPR: DATE:

NADEEM LINCOLN GREY
STATE OF WASHINGTON
32791
REGISTERED PROFESSIONAL ENGINEER

CMB 5/7/2018
CHECKED BY DATE
SWK 5/9/2018
DIRECTOR ENG. DATE PROJ. ENGR DATE
PRINTED BY: thelbig May 10, 2018
PORT ADDRESS: ONE SITCUM PLAZA
TACOMA WA, 98401-1837

APPROVED:

PARCEL 77 AUTO IMPORT TERMINAL

UTILITY LOCATION SCHEDULE

U1.6

100 OF 163

CONT/CONS: 070770 | TOWNSHIP: 21N | RANGE: 3E | SECTION: 36
M. ID: 201020.01 | DAT-HRZ: W83-SF | VERT: PORT OF TACOMA BM#
PHASE: BID SET | PARCEL: MULTIPLE | DRAWING SCALE: AS SHOWN

THIS DRAWING IS THE PROPERTY OF THE PORT OF TACOMA AND SHALL NOT BE USED ON OTHER WORK, DISCLOSED, COPIED, IN WHOLE OR IN PART, WITHOUT WRITTEN PERMISSION

BINDING EDGE
PORT OF TACOMA FILE: C:\Users\thelbig\appdata\local\temp\AcPublish_8020\U1.6 UTILITY LOCATION SCHEDULE

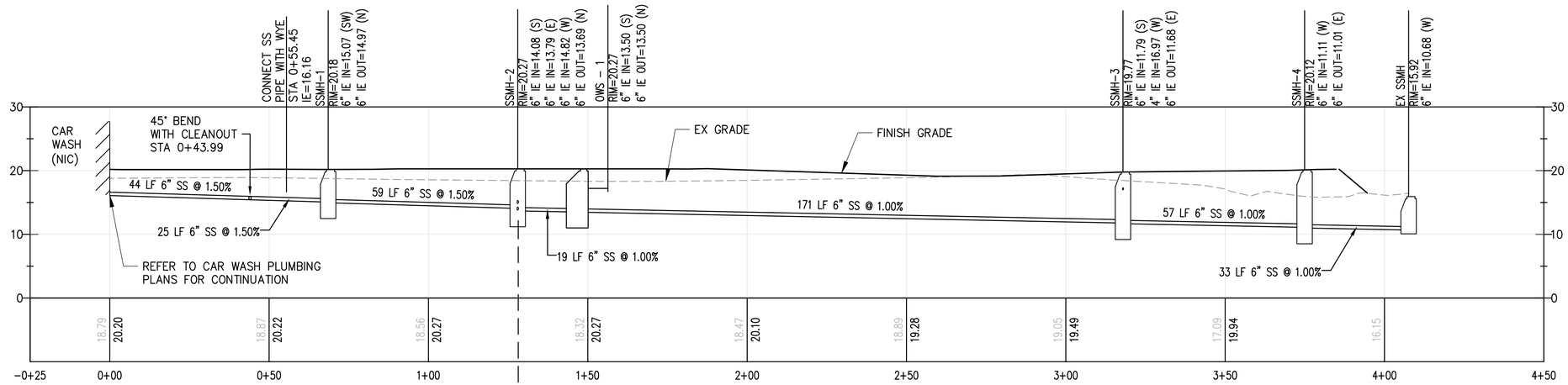

CAR WASH SANITARY SEWER PROFILE

1 / U1.1

SCALE: HORZ 1"=20' VERT 1"=10'

SAME STRUCTURE

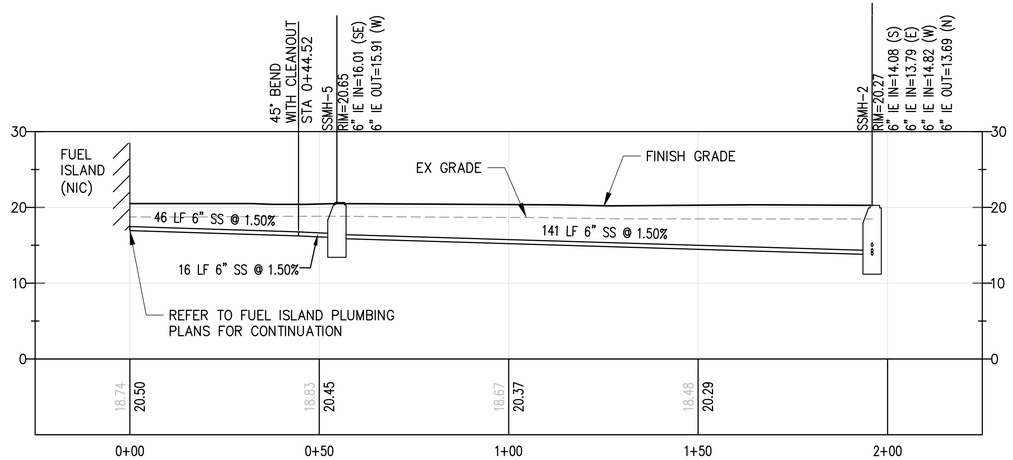

FUEL ISLAND SANITARY SEWER PROFILE

2 / U1.1

SCALE: HORZ 1"=20' VERT 1"=10'

Port of Tacoma
P.O. BOX 1837 TACOMA, WA 98401 (253)383-5841

kpff
2407 North 31st Street, Suite 100
Tacoma, WA 98407
(253) 396-0130 Fax (253) 396-0162

MARK:	REVISION:	BY:	APPR:	DATE:

CMB 5/7/2018
CHECKED BY DATE
SWK 5/9/2018
PROJ. ENGR DATE
PRINTED BY: thelbig May 10, 2018
PORT ADDRESS: ONE SITCUM PLAZA TACOMA WA, 98401-1837

APPROVED:
DIRECTOR, ENG. DATE

PARCEL 77 AUTO IMPORT TERMINAL

UTILITY PROFILES

TOWNSHIP: 21N | RANGE: 3E | SECTION: 36
DAT-HRZ: W83-SF | VERT: PORT OF TACOMA BM#
PARCEL: MULTIPLE | DRAWING SCALE: AS SHOWN

U1.7

101 OF 163

CONT/CONS: 070770
M. ID: 201020.01
PHASE: BID SET

THIS DRAWING IS THE PROPERTY OF THE PORT OF TACOMA AND SHALL NOT BE USED ON OTHER WORK, DISCLOSED, COPIED, IN WHOLE OR IN PART, WITHOUT WRITTEN PERMISSION

PORT OF TACOMA FILE: N:\2017\1700082 Automobile Import Terminal Planning\Part 3 - KPFF Design\3.13 Drawings\Current\30pc Design\U1.7-U1.12 UTILITY PROFILES
BINDING EDGE

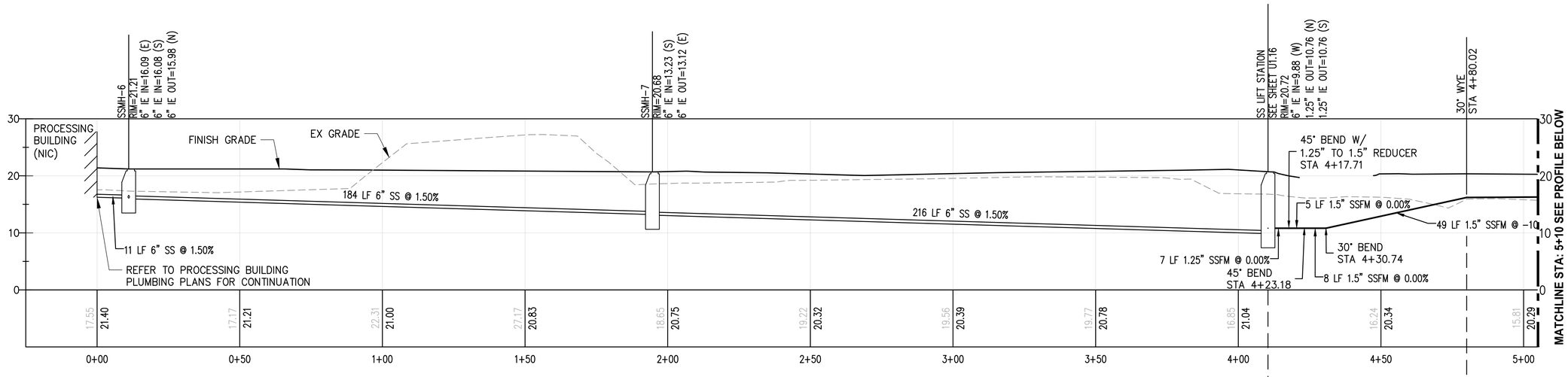

1 / U1.1 PROCESSING BUILDING SANITARY SEWER PROFILE

SCALE: HORZ 1"=20' VERT 1"=10'

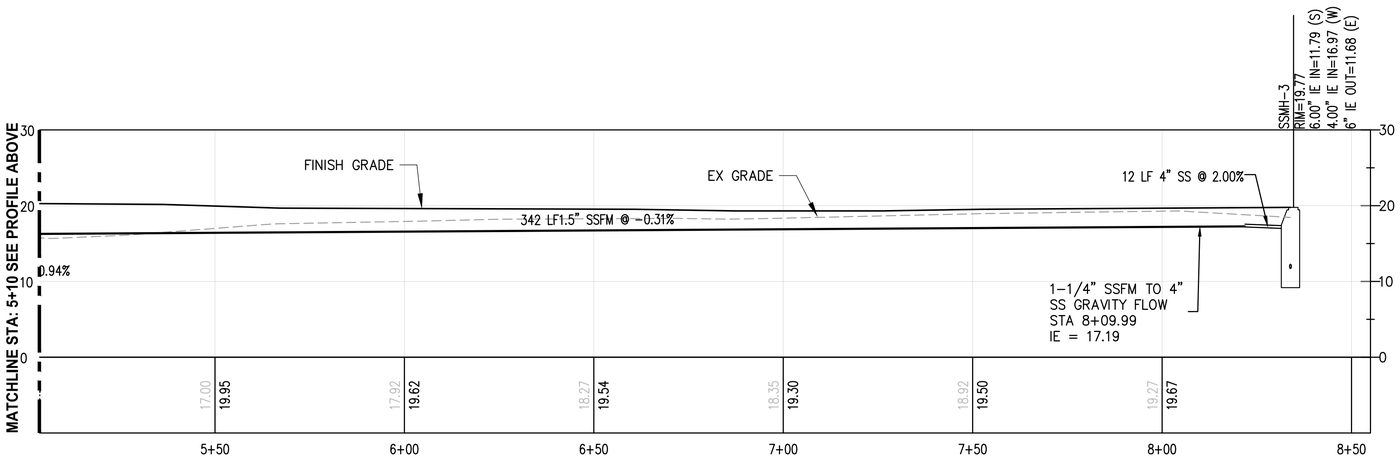

2 / U1.1 PROCESSING BUILDING SANITARY SEWER PROFILE

SCALE: HORZ 1"=20' VERT 1"=10'

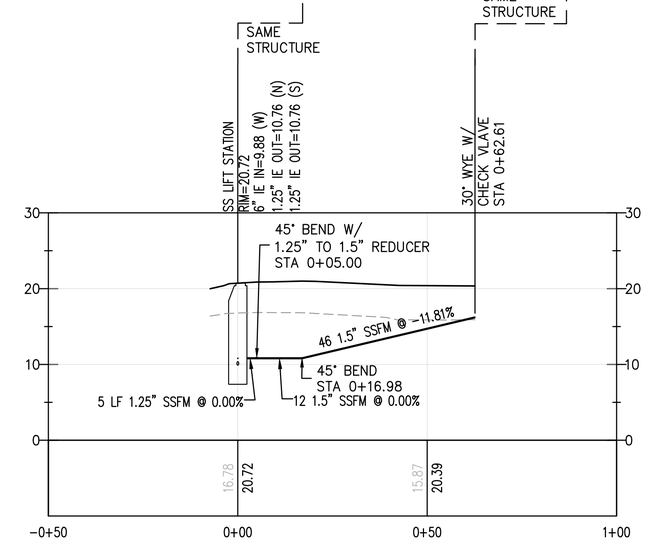

3 / U1.1 PROCESSING BUILDING BACKUP PUMP PROFILE

SCALE: HORZ 1"=20' VERT 1"=10'

Port of Tacoma
P.O. BOX 1837 TACOMA, WA 98401 (253)383-5841

kpff
2407 North 31st Street, Suite 100
Tacoma, Washington
(253) 396-0150 Fax (253) 396-0162

MARK:	REVISION:	BY:	APPR:	DATE:

MADE BY KEVIN GOVEY STATE OF WASHINGTON 32791 REGISTERED PROFESSIONAL ENGINEER

CMB	5/7/2018	
CHECKED BY	DATE	
SWK	5/9/2018	
PROJ. ENGR	DATE	
thelbig May 10, 2018		
PORT ADDRESS:ONE SITCUM PLAZA TACOMA WA, 98401-1837		

APPROVED:

DIRECTOR ENG. DATE

PARCEL 77 AUTO IMPORT TERMINAL

UTILITY PROFILES

TOWNSHIP: 21N	RANGE: 3E	SECTION: 36	
DAT-HRZ: W83-SF	VERT: PORT OF TACOMA BM#		
PARCEL: MULTIPLE	DRAWING SCALE: AS SHOWN		

U1.8

102 OF 163

CONT/CONS:	070770
M. ID:	201020.01
PHASE:	BID SET

THIS DRAWING IS THE PROPERTY OF THE PORT OF TACOMA AND SHALL NOT BE USED ON OTHER WORK, DISCLOSED, COPIED, IN WHOLE OR IN PART, WITHOUT WRITTEN PERMISSION

PORT OF TACOMA FILE: N:\2017\1700082 Automobile Import Terminal Planning\Part 3 - KPFF Design\3.13 Drawings\Current\30pc Design\U1.7-U1.12 UTILITY PROFILES
BINDING EDGE

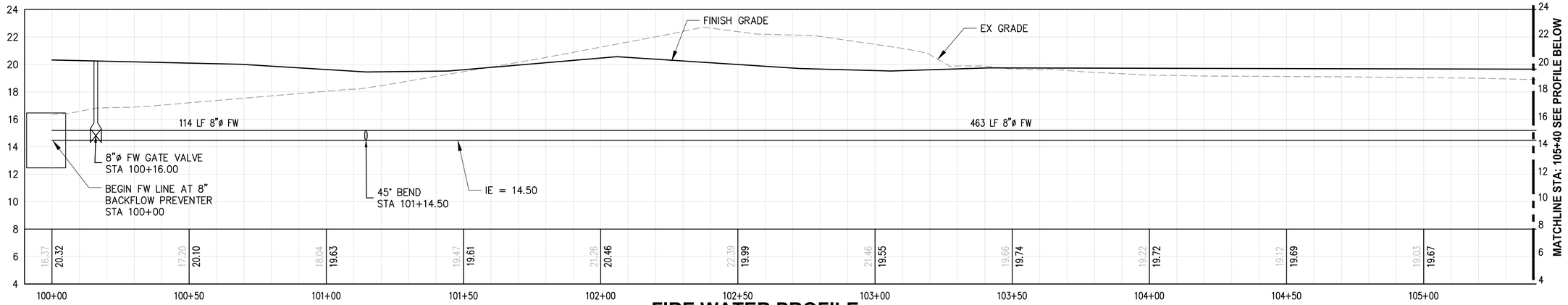

FIRE WATER PROFILE
STA 100+00 TO 105+40

1 U1.1,U1.3,U1.4 SCALE: HORZ 1"=20' VERT 1"=4'

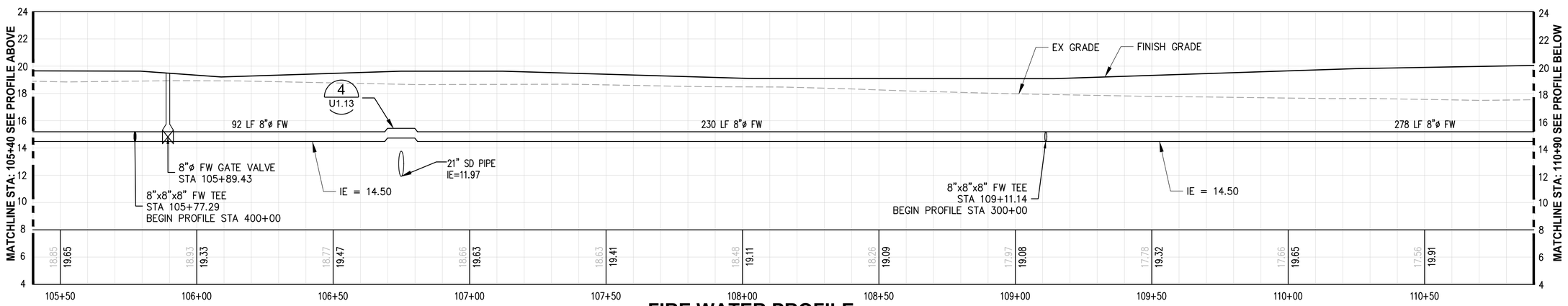

FIRE WATER PROFILE
STA 105+40 TO 110+90

2 U1.1,U1.3,U1.4 SCALE: HORZ 1"=20' VERT 1"=4'

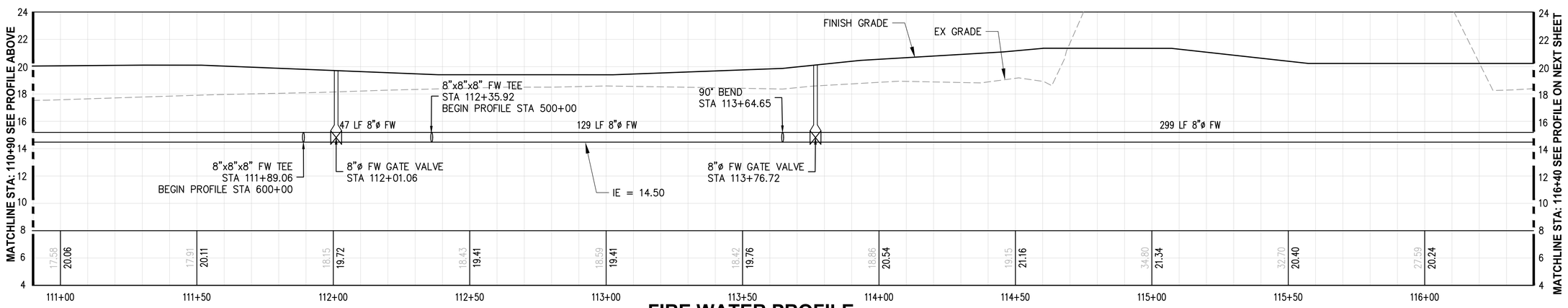

FIRE WATER PROFILE
STA 110+90 TO 116+40

3 U1.1,U1.3,U1.4 SCALE: HORZ 1"=20' VERT 1"=4'

Port of Tacoma
P.O. BOX 1837 TACOMA, WA 98401 (253)383-5841

kpff
2407 North 31st Street, Suite 100
Tacoma, WA 98407
(253) 396-0130 Fax (253) 396-0162

MARK:	REVISION:	BY:	APPR:	DATE:

CMB 5/7/2018
CHECKED BY DATE
SWK 5/9/2018
PROJ. ENGR DATE
DIRECTOR ENG. DATE
PRINTED BY: thelbig May 10, 2018
PORT ADDRESS: ONE SITCUM PLAZA TACOMA WA, 98401-1837

APPROVED:

PARCEL 77 AUTO IMPORT TERMINAL

UTILITY PROFILES

U1.9

103 OF 163

CONT/CONS: 070770	TOWNSHIP: 21N	RANGE: 3E	SECTION: 36
M. ID: 201020.01	DAT-HRZ: W83-SF	VERT: PORT OF TACOMA BM#	
PHASE: BID SET	PARCEL: MULTIPLE	DRAWING SCALE: AS SHOWN	

THIS DRAWING IS THE PROPERTY OF THE PORT OF TACOMA AND SHALL NOT BE USED ON OTHER WORK, DISCLOSED, COPIED, IN WHOLE OR IN PART, WITHOUT WRITTEN PERMISSION

BINDING EDGE
PORT OF TACOMA FILE: N:\2017\1700082 Automobile Import Terminal Planning\Part 3 - KPFF Design\3.13 Drawings\Current\30pc Design\U1.7-U1.12 UTILITY PROFILES

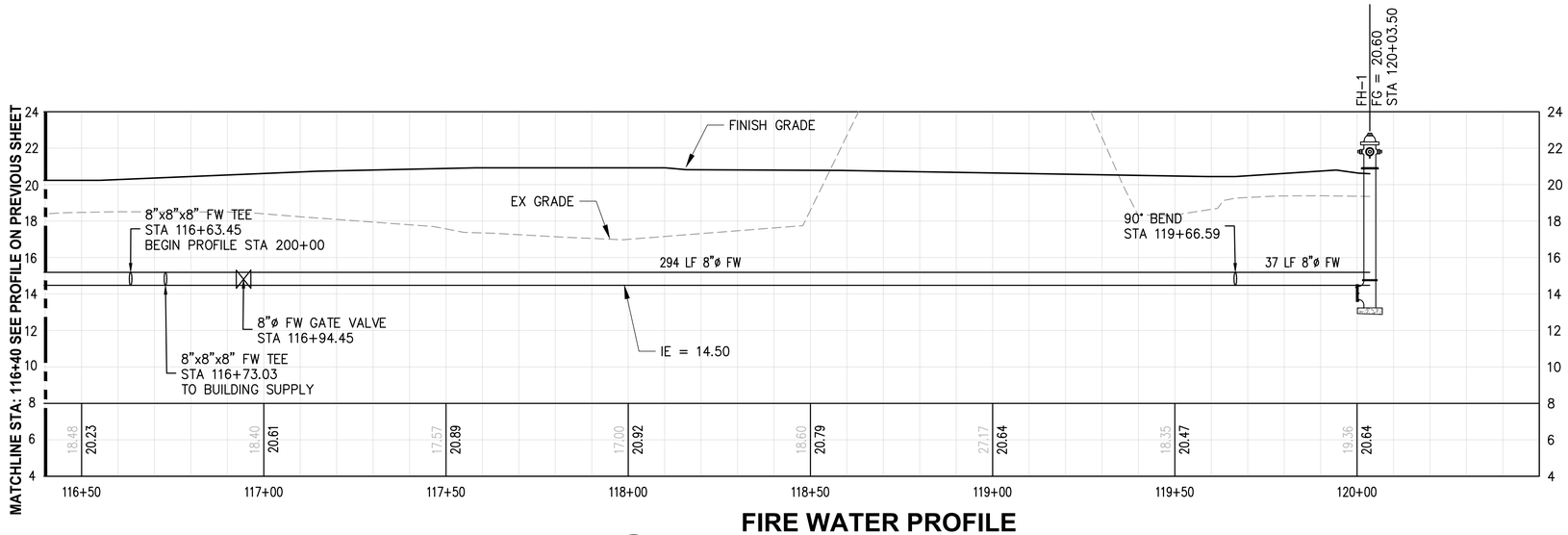

FIRE WATER PROFILE
STA 116+40 TO 121+50

1
U1.1,U1.3,U1.4

SCALE: HORZ 1"=20' VERT 1"=4'

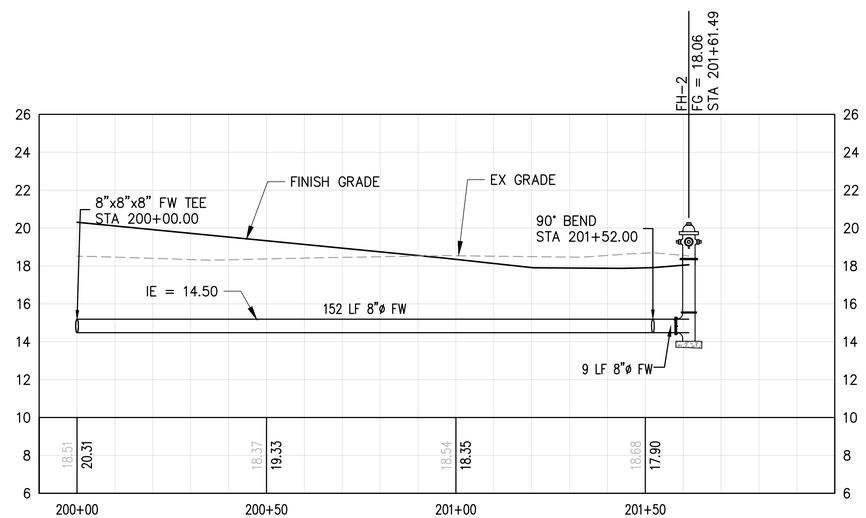

FIRE WATER PROFILE
STA 200+00 TO 202+00

2
U1.3

SCALE: HORZ 1"=20' VERT 1"=4'

Port of Tacoma
P.O. BOX 1837 TACOMA, WA 98401 (253)383-5841

kpff
2407 North 31st Street, Suite 100
Tacoma, WA 98407-3500
(253) 396-0130 Fax (253) 396-0162

MARK: | REVISION: | BY: | APPR: | DATE:

WADE KINGSLEY
STATE OF WASHINGTON
32791
REGISTERED PROFESSIONAL ENGINEER
5/9/18

APPROVED:

DIRECTOR ENG. DATE

CMB 5/7/2018
CHECKED BY DATE
SWK 5/9/2018
PROJ. ENGR DATE
PRINTED BY: thelbig May 10, 2018
PORT ADDRESS: ONE SITCUM PLAZA
TACOMA WA, 98401-1837

PARCEL 77 AUTO IMPORT TERMINAL

UTILITY PROFILES

U1.10

104 OF 163

CONT/CONS: 070770	TOWNSHIP: 21N	RANGE: 3E	SECTION: 36
M. ID: 201020.01	DAT-HRZ: W83-SF	VERT: PORT OF TACOMA BM#	
PHASE: BID SET	PARCEL: MULTIPLE	DRAWING SCALE: AS SHOWN	

THIS DRAWING IS THE PROPERTY OF THE PORT OF TACOMA AND SHALL NOT BE USED ON OTHER WORK, DISCLOSED, COPIED, IN WHOLE OR IN PART, WITHOUT WRITTEN PERMISSION

BINDING EDGE
PORT OF TACOMA FILE: N:\2017\1700082 Automobile Import Terminal Planning\Part 3 - KPFF Design\3.13 Drawings\Current\30pc Design\U1.7-U1.12 UTILITY PROFILES

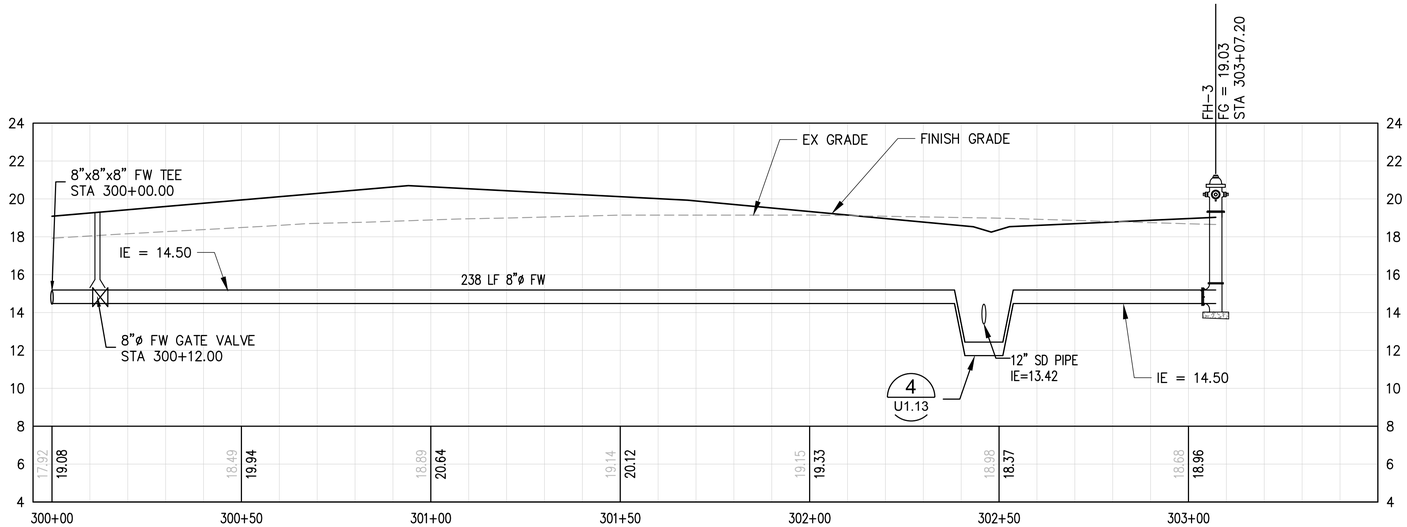

FIRE WATER PROFILE
STA 300+00 TO 303+50

1
U1.3

SCALE: HORZ 1"=20' VERT 1"=4'

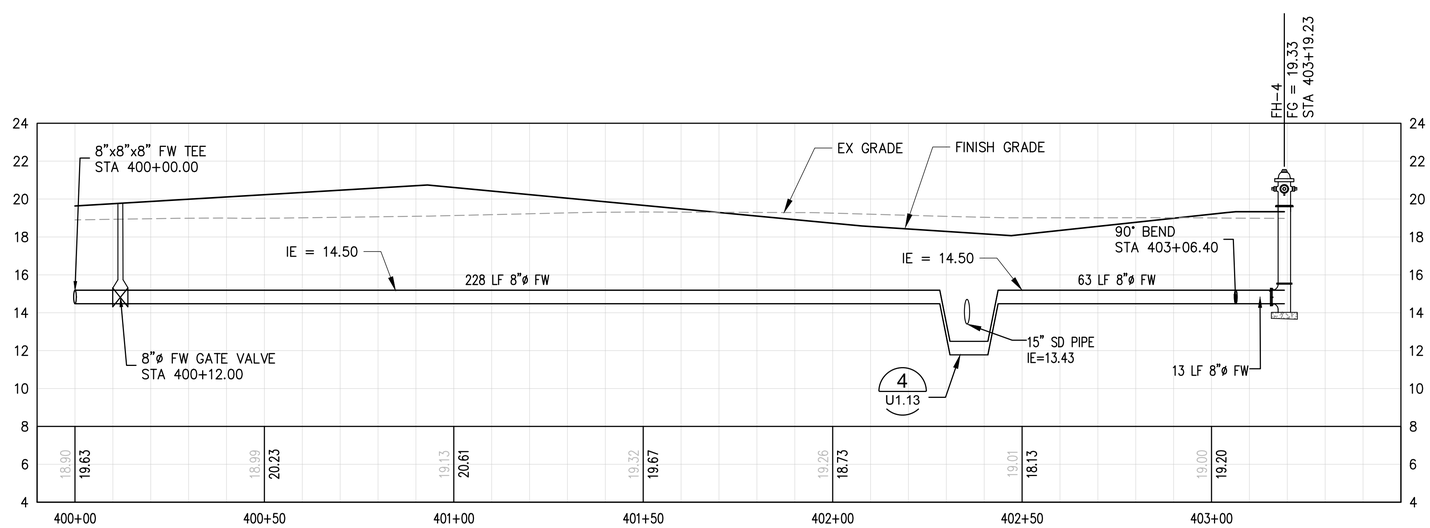

FIRE WATER PROFILE
STA 400+00 TO 403+50

2
U1.1,U1.3

SCALE: HORZ 1"=20' VERT 1"=4'

Port of Tacoma
P.O. BOX 1837 TACOMA, WA 98401 (253)383-5841

kpff
2407 North 31st Street, Suite 100
Tacoma, WA 98407
(253) 396-0150 Fax (253) 396-0162

MARK:	REVISION:	BY:	APPR:	DATE:

STATE OF WASHINGTON
CANADA KING CHEY
32791
REGISTERED PROFESSIONAL ENGINEER
5/9/18

APPROVED:

CMB	5/7/2018	
CHECKED BY	DATE	
SWK	5/9/2018	
PROJ. ENGR	DATE	
DIRECTOR ENG.	DATE	

PRINTED BY: thelbig May 10, 2018
PORT ADDRESS: ONE SITCUM PLAZA
TACOMA WA, 98401-1837

PARCEL 77 AUTO IMPORT TERMINAL

UTILITY PROFILES

TOWNSHIP: 21N	RANGE: 3E	SECTION: 36	
DAT-HRZ: W83-SF	VERT: PORT OF TACOMA BM#		
PARCEL: MULTIPLE	DRAWING SCALE: AS SHOWN		

U1.11

105 OF 163

CONT/CONS:	070770
M. ID:	201020.01
PHASE:	BID SET

THIS DRAWING IS THE PROPERTY OF THE PORT OF TACOMA AND SHALL NOT BE USED ON OTHER WORK, DISCLOSED, COPIED, IN WHOLE OR IN PART, WITHOUT WRITTEN PERMISSION

BINDING EDGE
PORT OF TACOMA FILE: N:\2017\1700082 Automobile Import Terminal Planning\Part 3 - KPFF Design\3.13 Drawings\Current\30pc Design\U1.7-U1.12 UTILITY PROFILES

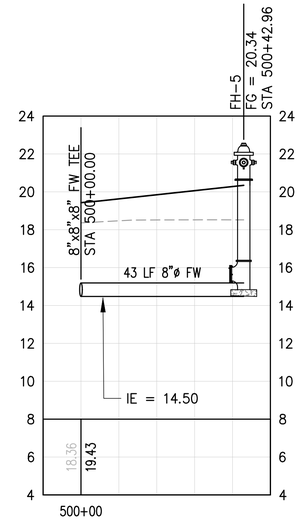

FIRE WATER PROFILE
STA 500+00 TO 500+50

1 / U1.3

SCALE: HORZ 1"=20' VERT 1"=4'

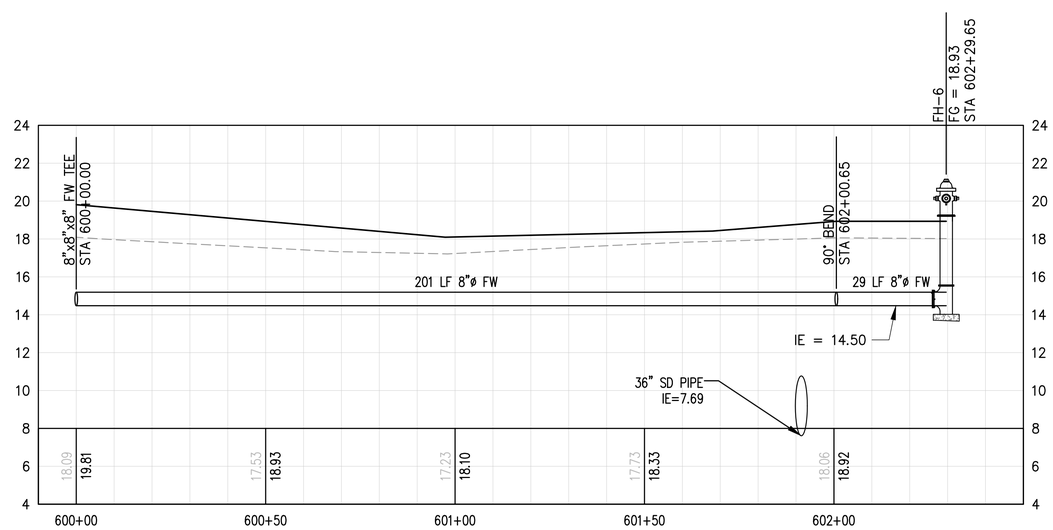

FIRE WATER PROFILE
STA 600+00 TO 302+50

2 / U1.3

SCALE: HORZ 1"=20' VERT 1"=4'

PARCEL 77 AUTO IMPORT TERMINAL

UTILITY PROFILES

APPROVED:

DIRECTOR, ENG. DATE

CMB 5/7/2018
CHECKED BY DATE
SWK 5/9/2018
PROJ. ENGR DATE
PRINTED BY: thelbig May 10, 2018
PORT ADDRESS: ONE SITCUM PLAZA TACOMA WA, 98401-1837

kpff
2407 North 31st Street, Suite 100
Tacoma, Washington 98407
(253) 396-0150 Fax (253) 396-0162

Port of Tacoma
P.O. BOX 1837 TACOMA, WA 98401 (253)383-5841

MADE IN WASHINGTON STATE OF WASHINGTON REGISTERED PROFESSIONAL ENGINEER 32791

MARK:	REVISION:	BY:	APPR:	DATE:

U1.12

106 OF 163

CONT/CONS: 070770	TOWNSHIP: 21N	RANGE: 3E	SECTION: 36
M. ID: 201020.01	DAT-HRZ: W83-SF	VERT: PORT OF TACOMA BM#	
PHASE: BID SET	PARCEL: MULTIPLE	DRAWING SCALE: AS SHOWN	

THIS DRAWING IS THE PROPERTY OF THE PORT OF TACOMA AND SHALL NOT BE USED ON OTHER WORK, DISCLOSED, COPIED, IN WHOLE OR IN PART, WITHOUT WRITTEN PERMISSION

PORT OF TACOMA FILE: N:\2017\1700082 Automobile Import Terminal Planning\Part 3 - KPFF Design\3.13 Drawings\Current\30pc Design\U1.7-U1.12 UTILITY PROFILES

BINDING EDGE

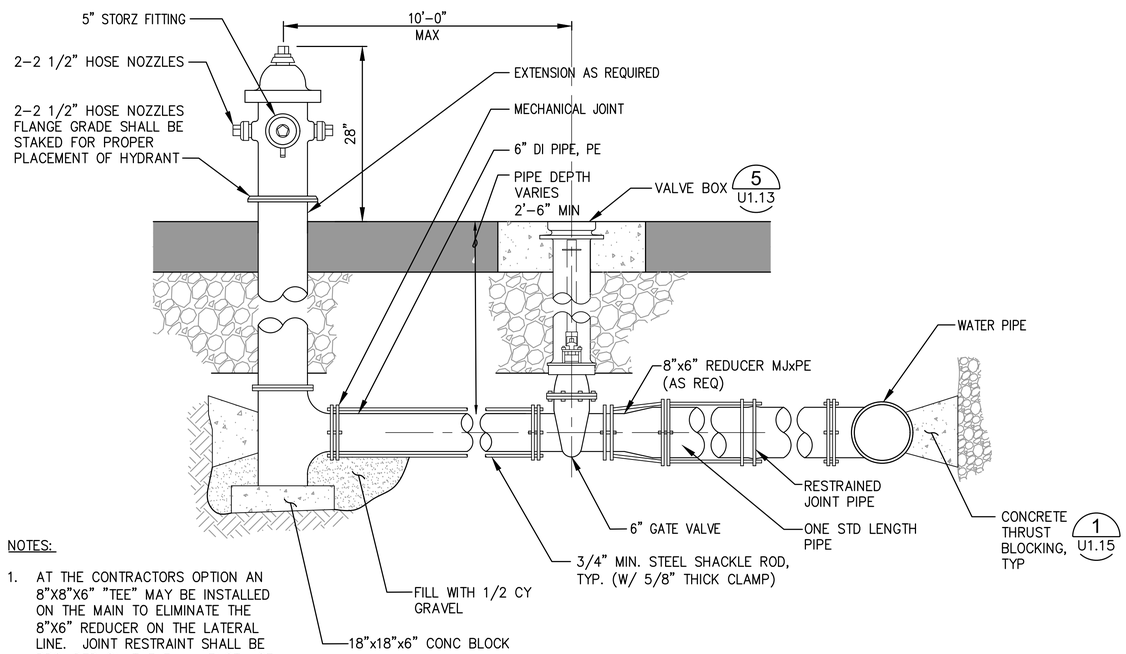

NOTES:

1. AT THE CONTRACTORS OPTION AN 8"X8"X6" "TEE" MAY BE INSTALLED ON THE MAIN TO ELIMINATE THE 8"X6" REDUCER ON THE LATERAL LINE. JOINT RESTRAINT SHALL BE PROVIDED ON THE FULL LENGTH OF THE 6" LINE, INCLUDING END FITTINGS.

1 FIRE HYDRANT ASSEMBLY

U1.0–U1.5 NTS

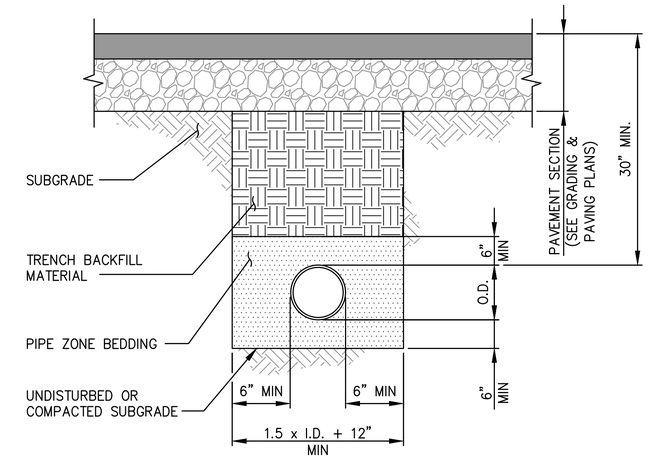

NOTES:

1. CONTRACTOR SHALL PROVIDE DEWATERING SYSTEMS AS REQUIRED DURING PIPE INSTALLATIONS.

2 WATER PIPE BEDDING

– NTS

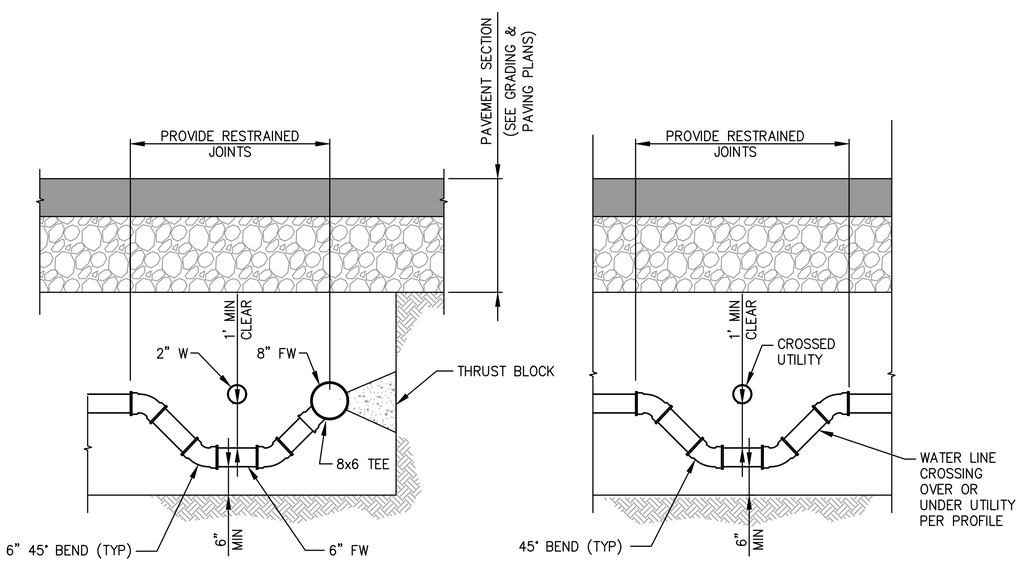

3 WATER CROSSING TO HYDRANT

– NTS

4 UTILITY CROSSING

U1.9–U1.12 NTS

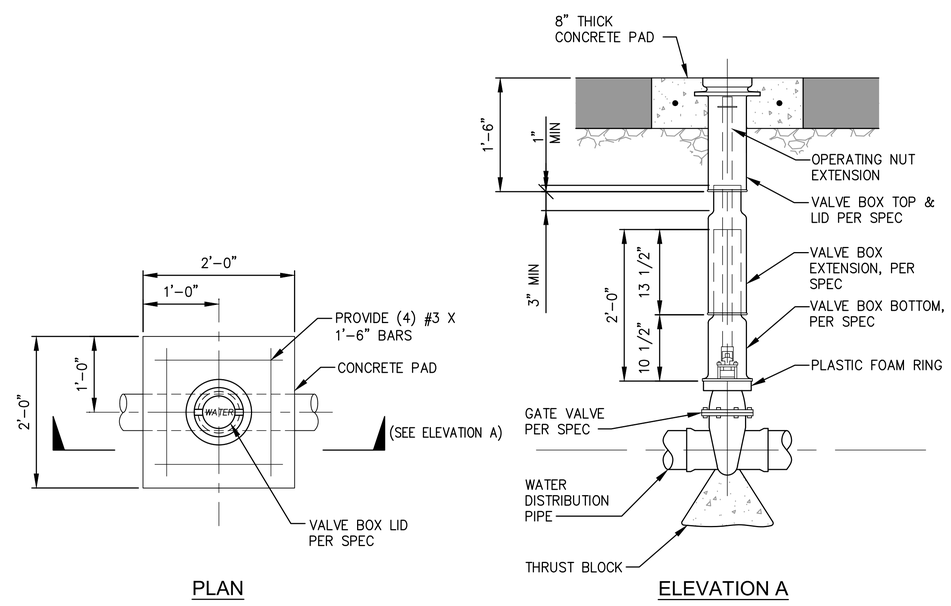

5 GATE VALVE/VALVE BOX

U1.0–U1.5 NTS

Port of Tacoma
P.O. BOX 1837 TACOMA, WA 98401 (253)383-5841

kpff
2407 North 31st Street, Suite 100
Tacoma, WA 98407
(253) 396-0150 Fax (253) 396-0162

MARK:	REVISION:	BY:	APPR:	DATE:

MADELINE KINCSEY STATE OF WASHINGTON 32791 REGISTERED PROFESSIONAL ENGINEER

	CMB	5/7/2018
	CHECKED BY	DATE
	SWK	5/9/2018
DIRECTOR ENG: DATE	PROJ. ENGR	DATE
PRINTED BY: thelbig May 10, 2018		
PORT ADDRESS: ONE SITCUM PLAZA TACOMA WA, 98401-1837		

APPROVED:

PARCEL 77 AUTO IMPORT TERMINAL

UTILITY DETAILS

TOWNSHIP: 21N	RANGE: 3E	SECTION: 36	
DAT-HRZ: W83-SF	VERT: PORT OF TACOMA BM#		
PARCEL: MULTIPLE	DRAWING SCALE: AS SHOWN		

U1.13

107 OF 163

CONT/CONS:	070770
M. ID:	201020.01
PHASE:	BID SET

THIS DRAWING IS THE PROPERTY OF THE PORT OF TACOMA AND SHALL NOT BE USED ON OTHER WORK, DISCLOSED, COPIED, IN WHOLE OR IN PART, WITHOUT WRITTEN PERMISSION

PORT OF TACOMA FILE: N:\2017\1700082 Automobile Import Terminal Planning\Part 3 - KPFF Design\3.13 Drawings\Current\30pc Design\U1.13-U1.17 UTILITY DETAILS
BINDING EDGE

1" REDUCED PRESSURE BACKFLOW ASSEMBLY NOTES:

1" REDUCED PRESSURE BACKFLOW ASSEMBLY SHALL BE LF909-QT AND SHALL BE 1.5' MIN ABOVE CONCRETE SLAB. HEATED ENCLOSURE SHALL HAVE 1' MIN CLEARANCE HORIZONTALLY AND 1' MIN CLEARANCE VERTICALLY FROM BACKFLOW ASSEMBLY AND PIPES. CONCRETE SLAB SHALL PROVIDE 6" FROM HEATED ENCLOSURE TO EDGE OF SLAB.

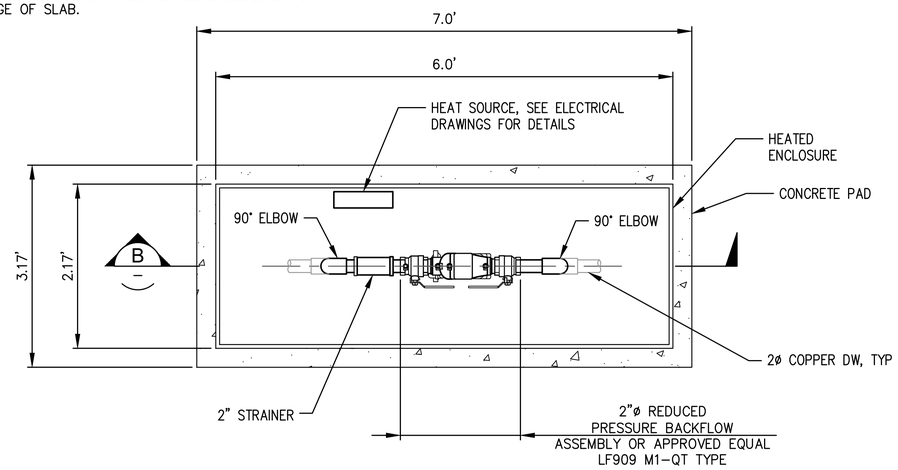

PLAN

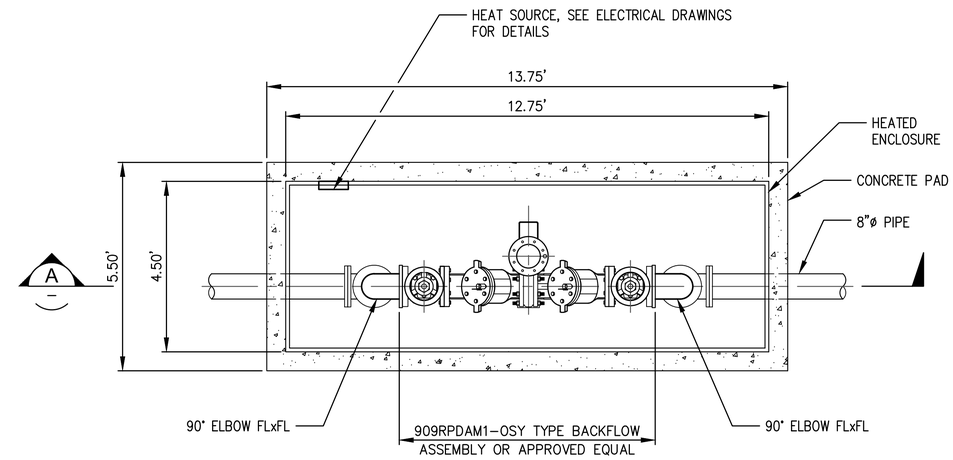

PLAN

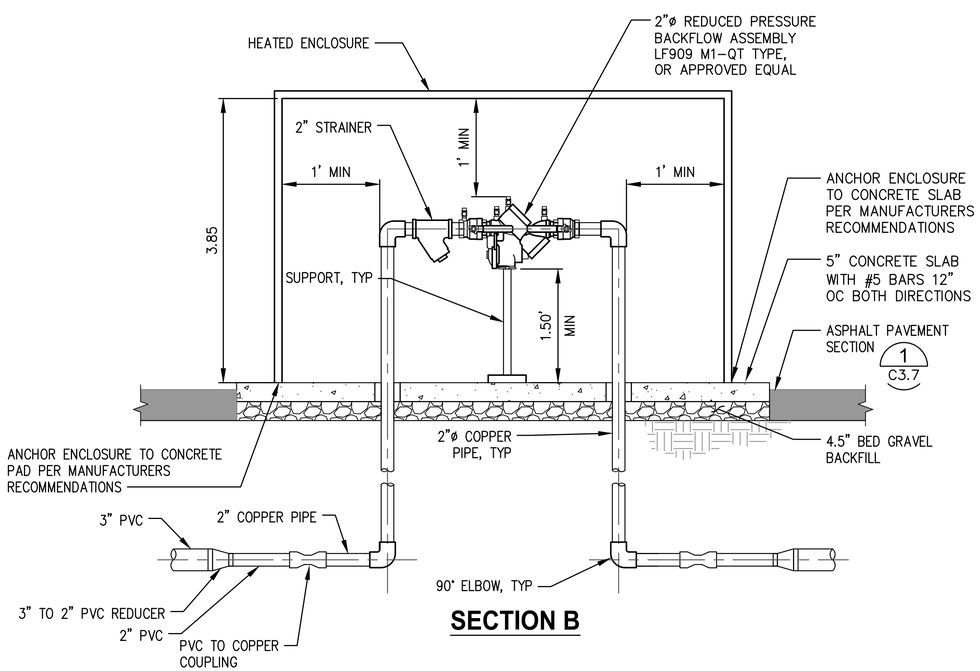

SECTION B

2" Ø REDUCED PRESSURE BACKFLOW ASSEMBLY

1 / U1.2,U1.5 — NTS

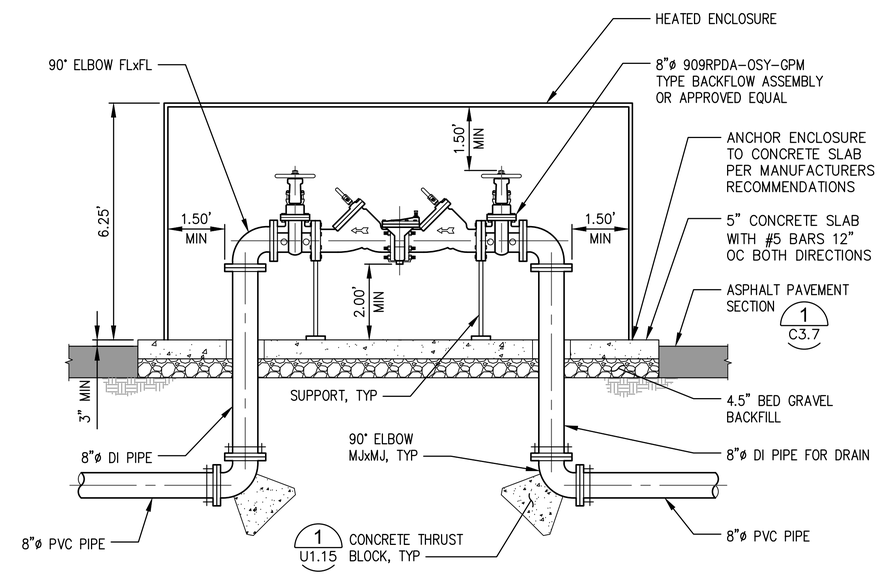

SECTION A

8" Ø REDUCED PRESSURE BACKFLOW ASSEMBLY

2 / U1.4 — NTS

kpff
2407 North 31st Street, Suite 100
Tacoma, Washington 98407
(253) 396-0150 Fax (253) 396-0162

Port of Tacoma
P.O. BOX 1837 TACOMA, WA 98401 (253)383-5841

MARK:	REVISION:	BY:	APPR:	DATE:

CMB 5/7/2018 — CHECKED BY DATE
SWK 5/9/2018 — PROJ. ENGR DATE
DIRECTOR ENG. DATE
PRINTED BY: thelbig May 10, 2018
PORT ADDRESS: ONE SITCUM PLAZA TACOMA WA, 98401-1837

APPROVED:

PARCEL 77 AUTO IMPORT TERMINAL

UTILITY DETAILS

TOWNSHIP: 21N | RANGE: 3E | SECTION: 36
DAT-HRZ: W83-SF | VERT: PORT OF TACOMA BM#
PARCEL: MULTIPLE | DRAWING SCALE: AS SHOWN

U1.14

108 OF 163

CONT/CONS: 070770
M. ID: 201020.01
PHASE: BID SET

THIS DRAWING IS THE PROPERTY OF THE PORT OF TACOMA AND SHALL NOT BE USED ON OTHER WORK, DISCLOSED, COPIED, IN WHOLE OR IN PART, WITHOUT WRITTEN PERMISSION

BINDING EDGE
PORT OF TACOMA FILE: N:\2017\1700082 Automobile Import Terminal Planning\Part 3 - KPFF Design\3.13 Drawings\Current\30pc Design\U1.13-U1.17 UTILITY DETAILS

THRUST BLOCK AREA IN SQUARE FEET												
SOIL	FIRM SILT OR FIRM SILTY SAND				COMPACT SAND				COMPACT SAND & GRAVEL			
PIPE FITTING SIZE	90° BEND	TEE	45° BEND CAP OR PLUG	11 1/4" & 22 1/2" BEND	90° BEND	TEE	45° BEND CAP OR PLUG	11 1/4" & 22 1/2" BEND	90° BEND	TEE	45° BEND CAP OR PLUG	11 1/4" & 22 1/2" BEND
4"	7.0	4.2	4.2	1.7	2.9	2.1	2.1	1.0	2.2	1.6	1.6	1.0
6"	13.3	9.4	9.4	3.8	6.7	4.7	4.7	1.9	5.0	3.5	3.5	1.4
8"	23.3	16.7	16.7	6.7	11.7	8.40	8.4	3.4	8.8	6.3	6.3	2.5
12"	53.0	37.5	37.5	15.0	26.5	18.8	18.8	7.5	20.0	14.0	14.0	5.6
AREAS CALCULATED ON 300 PSI TEST PRESSURE AND 3'-0" MIN. COVER OVER WATERMAIN												

NOTES:

1. CONTRACTOR TO PROVIDE BLOCKING ADEQUATE TO WITHSTAND FULL TEST PRESSURE.
2. CAST-IN-PLACE THRUST BLOCKING SHALL BE CURED FOR A MINIMUM OF 1 DAY PRIOR TO BACKFILLING. PIPE PRESSURE TESTING SHALL NOT BE CONDUCTED UNTIL BLOCKING HAS REACHED DESIGN COMPRESSION STRENGTH.
3. BLOCKING FOR HORIZONTAL FITTINGS SHALL BEAR AGAINST UNDISTURBED NATIVE GROUND OR STRUCTURAL FILL COMPACTED TO 95% OF MODIFIED PROCTOR. SEE TABLES FOR REQUIRED BEARING AREAS.
4. HORIZONTAL BLOCKING THRUST AREAS SHALL BE CENTERED ON PIPE.
5. MINIMUM AREA IS COMPUTED BY DIVIDING THRUST BY SAFE BEARING LOAD.
6. THRUST BLOCK AREA MUST BE ADJUSTED FOR PRESSURE CONDITIONS NOT SHOWN IN TABLE.
7. PROVIDE 20 LB TAR PAPER OR 10 MIL PLASTIC BETWEEN CONCRETE THRUST BLOCK AND PIPE.

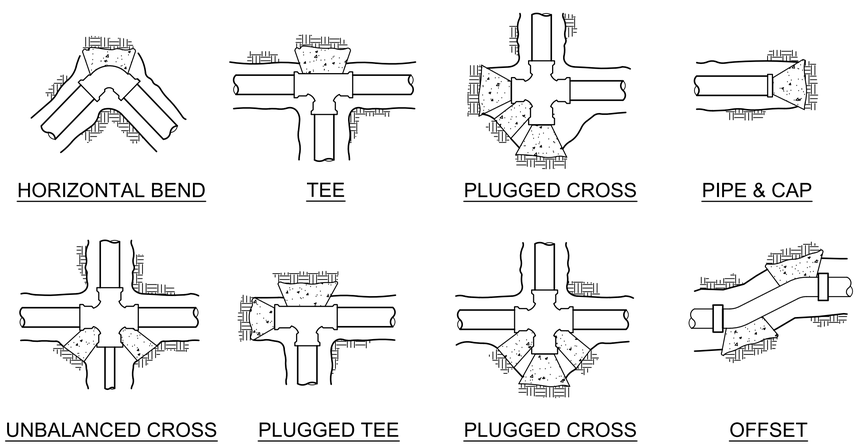

1 TYPICAL CONCRETE HORIZONTAL THRUST BLOCK

NTS

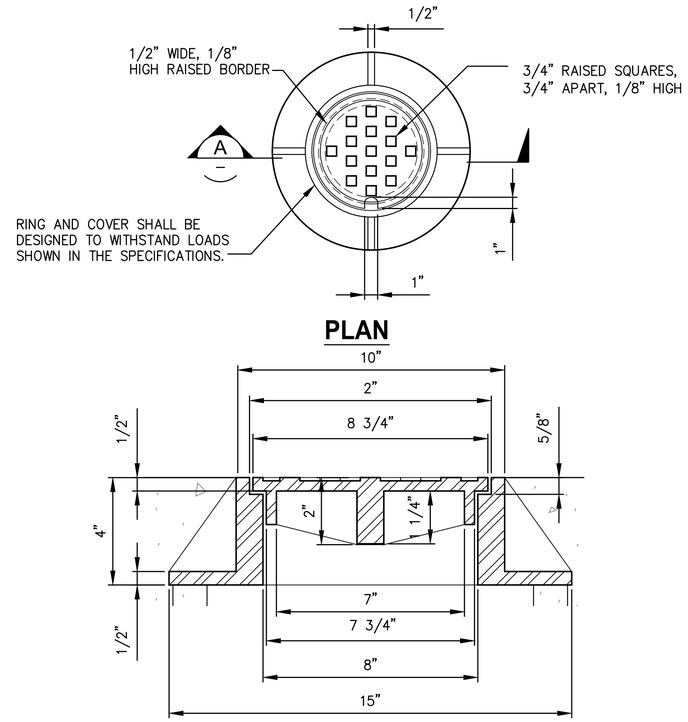

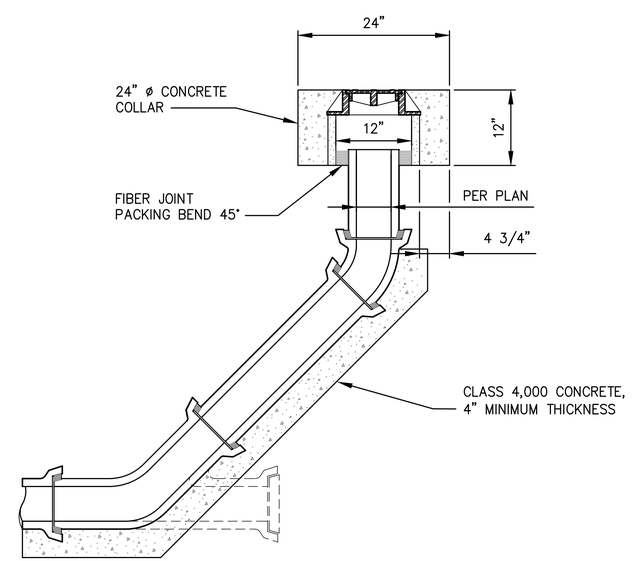

2 SANITARY CLEANOUT

U1.1

NTS

Port of Tacoma
P.O. BOX 1837 TACOMA, WA 98401 (253)383-5841

kpff
2407 North 31st Street, Suite 100
Tacoma, WA 98407
(253) 396-0130 Fax (253) 396-0162

MARK:	REVISION:	BY:	APPR:	DATE:

PARCEL 77 AUTO IMPORT TERMINAL

UTILITY DETAILS

APPROVED:

CMB	5/7/2018	DIRECTOR, ENG.	DATE
CHECKED BY	DATE	PROJ. ENGR	DATE
SWK	5/9/2018		
PRINTED BY: thelbig May 10, 2018			
PORT ADDRESS: ONE SITCUM PLAZA TACOMA WA, 98401-1837			

U1.15

109 OF 163

CONT/CONS: 070770	TOWNSHIP: 21N	RANGE: 3E	SECTION: 36
M. ID: 201020.01	DAT-HRZ: W83-SF	VERT: PORT OF TACOMA BM#	
PHASE: BID SET	PARCEL: MULTIPLE	DRAWING SCALE: AS SHOWN	

THIS DRAWING IS THE PROPERTY OF THE PORT OF TACOMA AND SHALL NOT BE USED ON OTHER WORK, DISCLOSED, COPIED, IN WHOLE OR IN PART, WITHOUT WRITTEN PERMISSION

BINDING EDGE
PORT OF TACOMA FILE: N:\2017\1700082 Automobile Import Terminal Planning\Part 3 - KPFF Design\3.13 Drawings\Current\30pc Design\U1.13-U1.17 UTILITY DETAILS

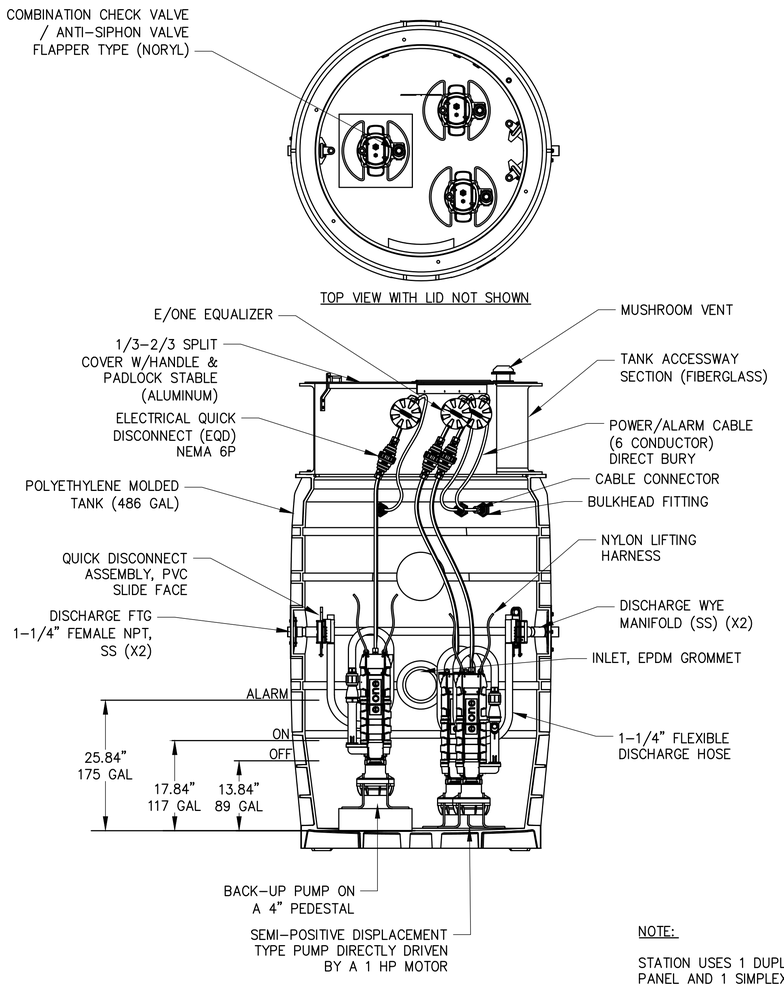

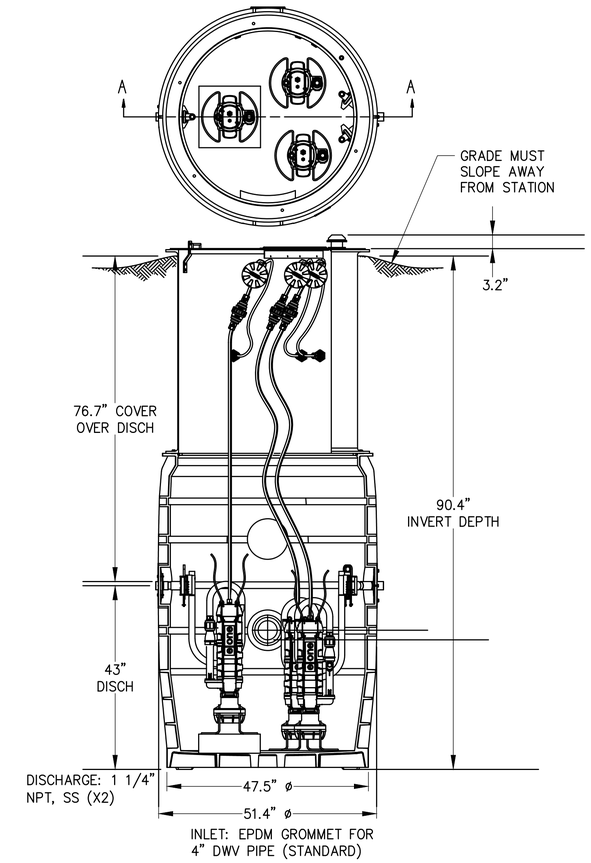

NOTE:

STATION USES 1 DUPLEX MOD T260 ALARM PANEL AND 1 SIMPLEX SENTRY ALARM PANEL

1 SANITARY SEWER LIFT STATION

U1.1

NTS

kpff
2407 North 31st Street, Suite 100
Tacoma, Washington 98407
(253) 396-0150 Fax (253) 396-0162

Port of Tacoma
P.O. BOX 1837 TACOMA, WA 98401 (253)383-5841

MARK:	REVISION:	BY:	APPR:	DATE:

APPROVED:

CMB	5/7/2018	
CHECKED BY	DATE	
SWK	5/9/2018	
DIRECTOR ENG.	DATE	PROJ. ENGR DATE
PRINTED BY: thelbig May 10, 2018		
PORT ADDRESS: ONE SITCUM PLAZA TACOMA WA, 98401-1837		

PARCEL 77 AUTO IMPORT TERMINAL

UTILITY DETAILS

U1.16

110 OF 163

CONT/CONS: 070770	TOWNSHIP: 21N	RANGE: 3E	SECTION: 36
M. ID: 201020.01	DAT-HRZ: W83-SF	VERT: PORT OF TACOMA BM#	
PHASE: BID SET	PARCEL: MULTIPLE	DRAWING SCALE: AS SHOWN	

THIS DRAWING IS THE PROPERTY OF THE PORT OF TACOMA AND SHALL NOT BE USED ON OTHER WORK, DISCLOSED, COPIED, IN WHOLE OR IN PART, WITHOUT WRITTEN PERMISSION

BINDING EDGE
PORT OF TACOMA FILE: N:\2017\1700082 Automobile Import Terminal Planning\Part 3 - KPFF Design\3.13 Drawings\Current\30pc Design\U1.13-U1.17 UTILITY DETAILS

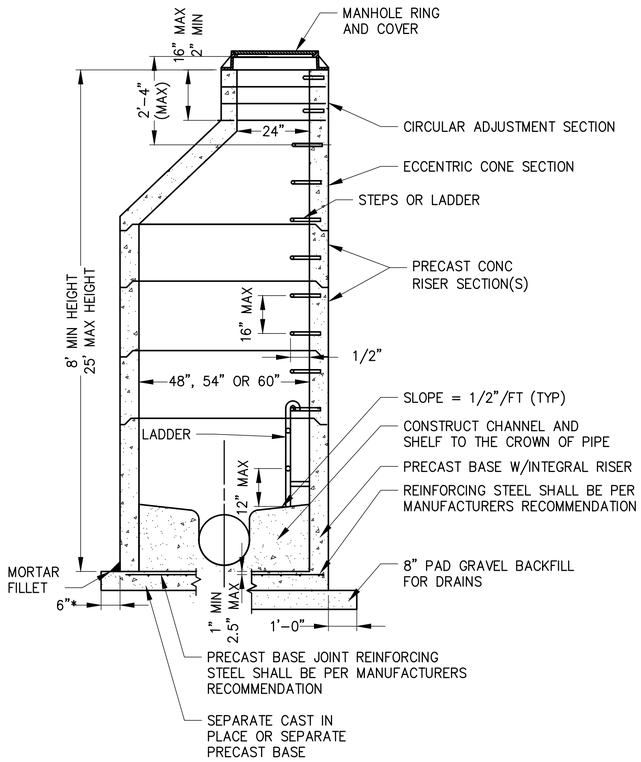

MANHOLE DIMENSIONS TABLE				
DIA	MIN WALL THICKNESS	MIN BASE THICKNESS	MAX KNOCKOUT SIZE	MIN DIST BETWEEN KNOCKOUTS
48"	4"	6"	36"	8"
54"	4.5"	8"	42"	8"
60"	5"	8"	48"	8"

1 SANITARY SEWER MANHOLE
U1.1 NTS

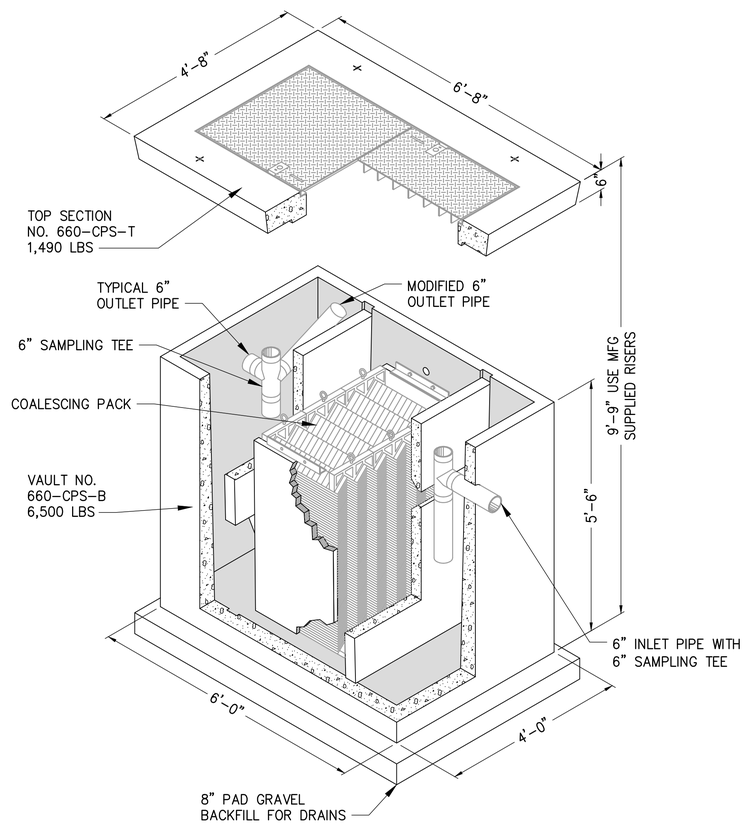

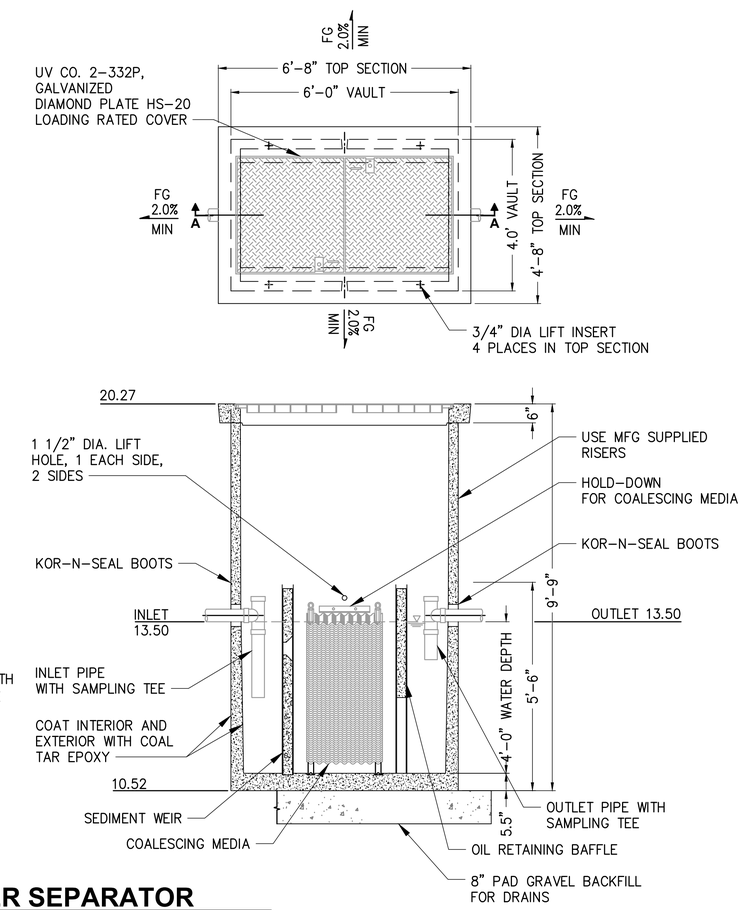

2 OIL WATER SEPARATOR
U1.1 NTS

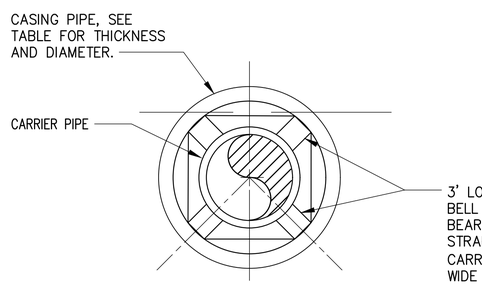

SECTION A-A
SD PIPE

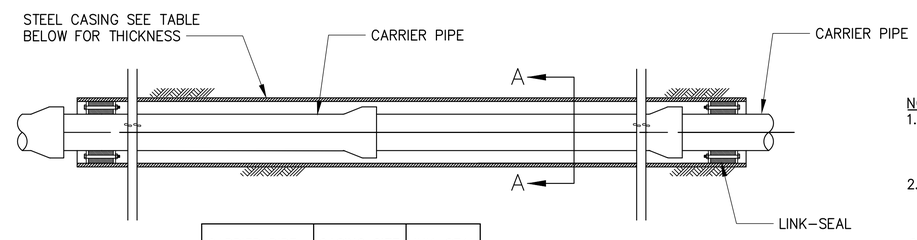

CARRIER PIPE SIZE (NOMINAL)	CASING SIZE (NOMINAL)	LINK-SEAL SIZE NO.
1-1/4"	3-1/4"	LS-275-C
6"	10"	LS-475-C
8"	16"	LS-475-C
10"	18"	LS-400-C
12"	20"	LS-400-C
18"	30"	LS-500-C

MINIMUM THICKNESS FOR CASING PIPE	DIAMETER OF CASING PIPE
1/4" (0.25")	12" OR LESS
5/16" (0.3125")	OVER 12"-18"
11/32" (0.344")	20" & 22"

NOTES:
1. THIS SECTION SHOWS PIPE CASING AS REQUIRED BY AREMA STANDARDS FOR E80 LOADING.
2. CASING SHALL EXTEND 15' BEYOND THE CENTERLINE OF THE TRACKS.

CASING:
SIZE AND MINIMUM THICKNESS OF CASING SHALL BE AS SHOWN ON THE CONTRACT DRAWINGS. HOWEVER, THE CONTRACTOR SHALL BE RESPONSIBLE FOR SELECTING THE THICKNESS CONSISTENT WITH HIS OPERATION.

CASING SEAL:
MINIMUM 3/16" THICK, SHEET TYPE SYNTHETIC RUBBER WITH STAINLESS STEEL BANDS.

3 PIPE CASING
U1.2 NTS

Port of Tacoma
P.O. BOX 1837 TACOMA, WA 98401 (253)383-5841
kpff
2407 North 31st Street, Suite 100
Tacoma, WA 98407
(253) 396-0150 Fax (253) 396-0162

MARK:	REVISION:	BY:	APPR:	DATE:

CMB 5/7/2018
CHECKED BY DATE
SWK 5/9/2018
PROJ. ENGR DATE
DIRECTOR ENG. DATE
PRINTED BY: thelbig May 10, 2018
PORT ADDRESS: ONE SITCUM PLAZA TACOMA WA, 98401-1837

APPROVED:

PARCEL 77 AUTO IMPORT TERMINAL

UTILITY DETAILS

U1.17
111 OF 163

CONT/CONS: 070770 | TOWNSHIP: 21N | RANGE: 3E | SECTION: 36
M. ID: 201020.01 | DAT-HRZ: W83-SF | VERT: PORT OF TACOMA BM#
PHASE: BID SET | PARCEL: MULTIPLE | DRAWING SCALE: AS SHOWN

THIS DRAWING IS THE PROPERTY OF THE PORT OF TACOMA AND SHALL NOT BE USED ON OTHER WORK, DISCLOSED, COPIED, IN WHOLE OR IN PART, WITHOUT WRITTEN PERMISSION

BINDING EDGE
PORT OF TACOMA FILE: N:\2017\1700082 Automobile Import Terminal Planning\Part 3 - KPFF Design\3.13 Drawings\Current\30pc Design\U1.13-U1.17 UTILITY DETAILS