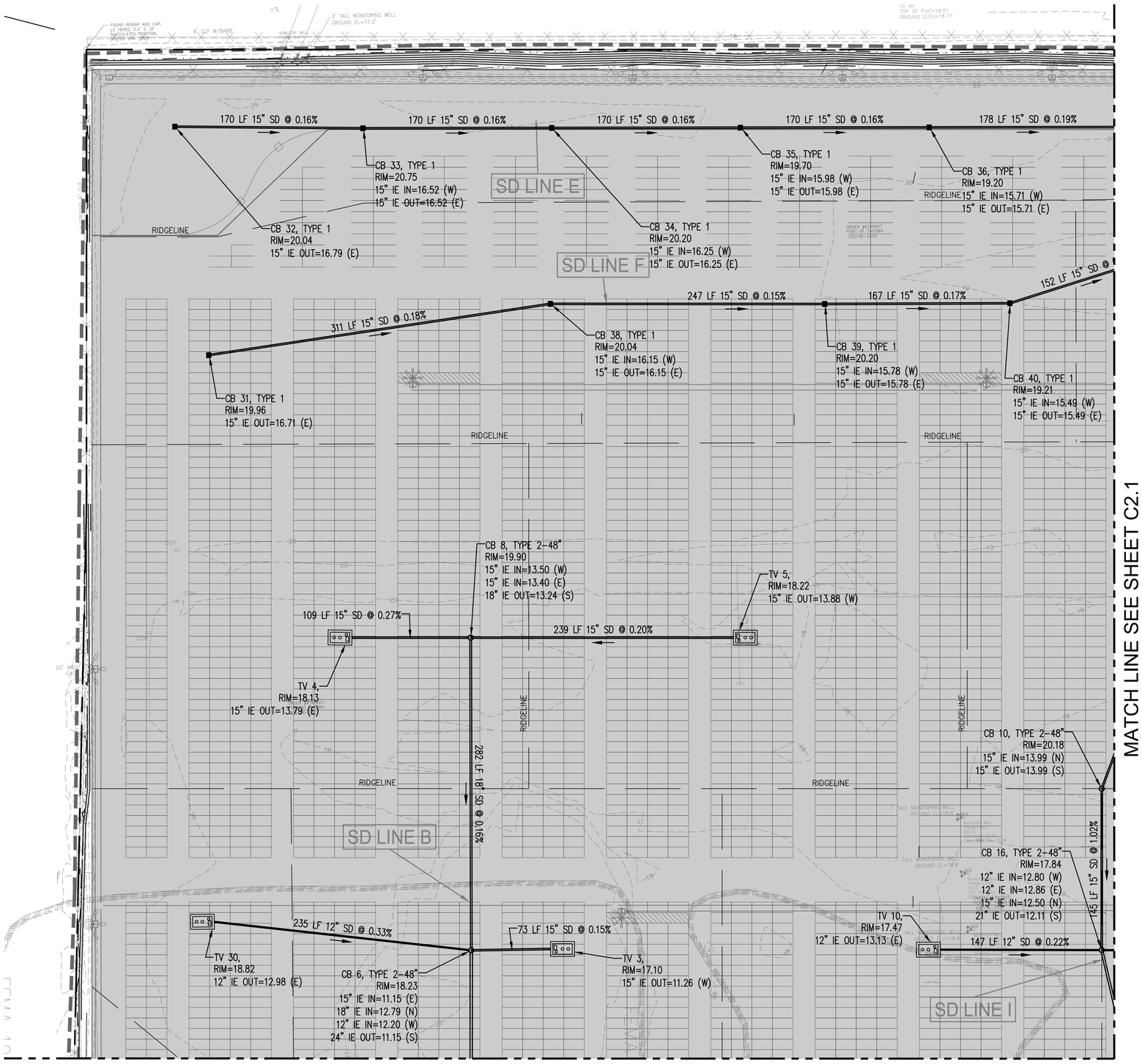

GRADING AND DRAINAGE NOTES

1. PAVEMENT EDGE, SEE 3/C3.7
2. OUTFALL PROTECTION, SEE 1/C2.25
3. CONSTRUCT CULVERT PROTECTION SLAB PER 2/C1.16

NOTES

1. REFER TO SHEETS D1.0 THRU D1.6 FOR AREAS OF KNOWN REMNANT CONTAMINATION, AREAS OF REMEDIATED CONTAMINATION, AND APPROXIMATE LOCATION OF BURIED CONCRETE FOUNDATIONS.
2. PROPOSED CONTOURS REPRESENT TOP OF PAVEMENT IN PAVED AREAS.
3. STRAIGHT GRADE SHALL BE MAINTAINED BETWEEN CONTOUR LINES AND SPOT ELEVATIONS UNLESS OTHERWISE SHOWN ON THE PLANS.
4. ALL FILL SOILS OR SOILS DISTURBED OR OVEREXCAVATED DURING CONSTRUCTION SHALL BE COMPACTED IN ACCORDANCE WITH THE SPECIFICATIONS.
5. STORM DRAIN PIPE SHALL BE CORRUGATED POLYETHYLENE PIPE, UNLESS OTHERWISE NOTED. REFER TO STORM DRAIN PROFILE SHEETS C2.9 THRU C2.20 FOR PIPE MATERIALS. PIPES CONNECTED TO TREATMENT VAULTS, FLOWING IN OR OUT, SHALL BE PVC
6. ALL CATCH BASIN TYPE 1 STRUCTURES SHALL BE CONSTRUCTED PER WSDOT STD PLAN B-5.20-01.
7. TYPE 1 CATCH BASINS SHALL HAVE A RECTANGULAR BI-DIRECTIONAL VANED GRATE PER WSDOT STD PLAN B-30.40-01
8. ALL CATCH BASIN TYPE 2 STRUCTURES SHALL BE CONSTRUCTED PER WSDOT STD PLAN B-10.20-01.
9. ALL PIPE MATERIALS, JOINTS, AND PROTECTIVE TREATMENTS SHALL BE IN ACCORDANCE WITH SECTION 9.05 OF THE 2018 WSDOT STANDARD SPECIFICATIONS.
10. ALL CATCH BASIN, MANHOLE AND TREATMENT VAULT BLOCKOUTS SHALL BE FITTED WITH PRECAST COMPRESSSION GASKET CONNECTION OR FLEXIBLE BOOT CONNECTION. SEE SHEET C2.6, NOTE 6.
11. PROVIDE CLEANOUT ON UPSTREAM END OF ALL SUBDRAIN AND ALL TIGHTLINE PIPES, AND MIDWAY ALONG SUBDRAIN AND ALL TIGHTLINE PIPES GREATER THAN 300 FEET LONG. REFER TO 3/C2.21 AND 5/C2.21
12. REFER TO SHEETS U1.0 THRU U1.5 FOR UTILITIES.
13. FOR TYPICAL TRACK SUBDRAIN INSTALLATION, REFER TO 3/C2.27

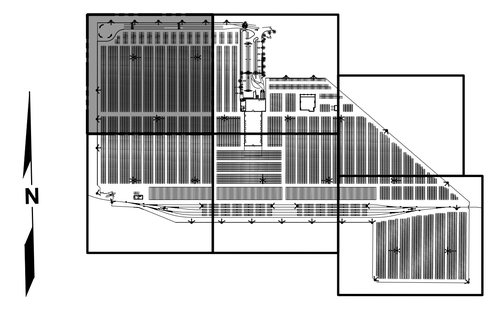

KEY PLAN
NTS

Port of Tacoma
P.O. BOX 1837 TACOMA, WA 98401 (253)383-5841

kpff
2407 North 31st Street, Suite 100
Tacoma, WA 98407
(253) 396-0150 Fax (253) 396-0162

MARK:	REVISION:	BY:	APPR:	DATE:

NADEEM KINCHEY
STATE OF WASHINGTON
32791
REGISTERED PROFESSIONAL ENGINEER

CMB	5/7/2018	
CHECKED BY	DATE	
SWK	5/9/2018	
PROJ. ENGR	DATE	
PRINTED BY:	cbennett May 10, 2018	
PORT ADDRESS:	ONE SITCUM PLAZA TACOMA WA, 98401-1837	

APPROVED:

DIRECTOR ENG: DATE

PARCEL 77 AUTO IMPORT TERMINAL

GRADING & DRAINAGE
AREA 1

TOWNSHIP: 21N	RANGE: 3E	SECTION: 36	
DAT-HRZ: W83-SF	VERT: PORT OF TACOMA BM#		
PARCEL: MULTIPLE	DRAWING SCALE: AS SHOWN		

C2.0
50 OF 163

CONT/CONS:	070770
M. ID:	201020.01
PHASE:	BID SET

THIS DRAWING IS THE PROPERTY OF THE PORT OF TACOMA AND SHALL NOT BE USED ON OTHER WORK, DISCLOSED, COPIED, IN WHOLE OR IN PART, WITHOUT WRITTEN PERMISSION

BINDING EDGE
PORT OF TACOMA FILE: C:\Users\cbennett\appdata\local\temp\AcPublish_9906\C2.0-C2.5 GRADING DRAINAGE AND UTILITY PLANS

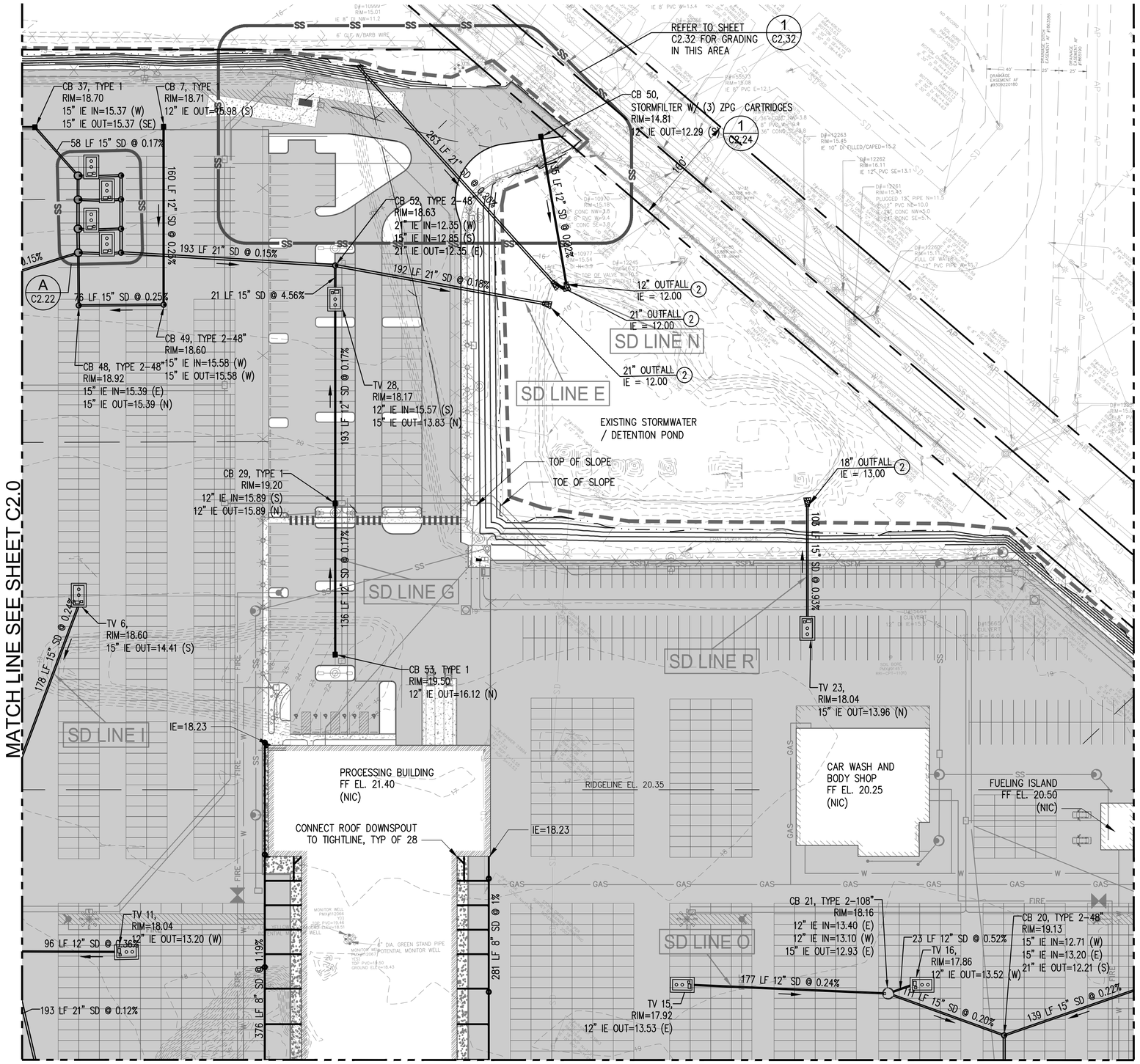

GRADING AND DRAINAGE NOTES

1. PAVEMENT EDGE, SEE 3/C3.7
2. OUTFALL PROTECTION, SEE 1/C2.25
3. CONSTRUCT CULVERT PROTECTION SLAB PER 2/C1.16

NOTES

1. REFER TO SHEETS D1.0 THRU D1.6 FOR AREAS OF KNOWN REMNANT CONTAMINATION, AREAS OF REMEDIATED CONTAMINATION, AND APPROXIMATE LOCATION OF BURIED CONCRETE FOUNDATIONS.
2. PROPOSED CONTOURS REPRESENT TOP OF PAVEMENT IN PAVED AREAS.
3. STRAIGHT GRADE SHALL BE MAINTAINED BETWEEN CONTOUR LINES AND SPOT ELEVATIONS UNLESS OTHERWISE SHOWN ON THE PLANS.
4. ALL FILL SOILS OR SOILS DISTURBED OR OVEREXCAVATED DURING CONSTRUCTION SHALL BE COMPACTED IN ACCORDANCE WITH THE SPECIFICATIONS.
5. STORM DRAIN PIPE SHALL BE CORRUGATED POLYETHYLENE PIPE, UNLESS OTHERWISE NOTED. REFER TO STORM DRAIN PROFILE SHEETS C2.9 THRU C2.20 FOR PIPE MATERIALS. PIPES CONNECTED TO TREATMENT VAULTS, FLOWING IN OR OUT, SHALL BE PVC
6. ALL CATCH BASIN TYPE 1 STRUCTURES SHALL BE CONSTRUCTED PER WSDOT STD PLAN B-5.20-01.
7. TYPE 1 CATCH BASINS SHALL HAVE A RECTANGULAR BI-DIRECTIONAL VANED GRATE PER WSDOT STD PLAN B-30.40-01
8. ALL CATCH BASIN TYPE 2 STRUCTURES SHALL BE CONSTRUCTED PER WSDOT STD PLAN B-10.20-01.
9. ALL PIPE MATERIALS, JOINTS, AND PROTECTIVE TREATMENTS SHALL BE IN ACCORDANCE WITH SECTION 9.05 OF THE 2018 WSDOT STANDARD SPECIFICATIONS.
10. ALL CATCH BASIN, MANHOLE AND TREATMENT VAULT BLOCKOUTS SHALL BE FITTED WITH PRECAST COMPRESSSION GASKET CONNECTION OR FLEXIBLE BOOT CONNECTION. SEE SHEET C2.6, NOTE 6.
11. PROVIDE CLEANOUT ON UPSTREAM END OF ALL SUBDRAIN AND ALL TIGHTLINE PIPES, AND MIDWAY ALONG SUBDRAIN AND ALL TIGHTLINE PIPES GREATER THAN 300 FEET LONG. REFER TO 3/C2.21 AND 5/C2.21
12. REFER TO SHEETS U1.0 THRU U1.5 FOR UTILITIES.
13. FOR TYPICAL TRACK SUBDRAIN INSTALLATION, REFER TO 3/C2.27

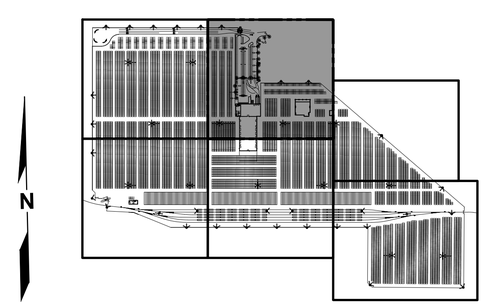

KEY PLAN
NTS

Port of Tacoma
P.O. BOX 1837 TACOMA, WA 98401 (253)383-5841

kpff
2407 North 31st Street, Suite 100
Tacoma, Washington 98407
(253) 396-0150 Fax (253) 396-0162

MARK:	REVISION:	BY:	APPR:	DATE:

APPROVED:

CMB	5/7/2018	
CHECKED BY	DATE	
SWK	5/9/2018	
PROJ. ENGR	DATE	
cbennett May 10, 2018		
PRINTED BY:		
PORT ADDRESS: ONE SITCUM PLAZA TACOMA WA, 98401-1837		
DIRECTOR ENG.	DATE	

PARCEL 77 AUTO IMPORT TERMINAL

GRADING & DRAINAGE
AREA 2

TOWNSHIP: 21N	RANGE: 3E	SECTION: 36	
DAT-HRZ: W83-SF	VERT: PORT OF TACOMA BM#		
PARCEL: MULTIPLE	DRAWING SCALE: AS SHOWN		

C2.1

51 OF 163

CONT/CONS:	070770
M. ID:	201020.01
PHASE:	BID SET

THIS DRAWING IS THE PROPERTY OF THE PORT OF TACOMA AND SHALL NOT BE USED ON OTHER WORK, DISCLOSED, COPIED, IN WHOLE OR IN PART, WITHOUT WRITTEN PERMISSION

BINDING EDGE
PORT OF TACOMA FILE: C:\Users\cbennett\appdata\local\temp\AcPublish_9906\C2.0-C2.5 GRADING DRAINAGE AND UTILITY PLANS

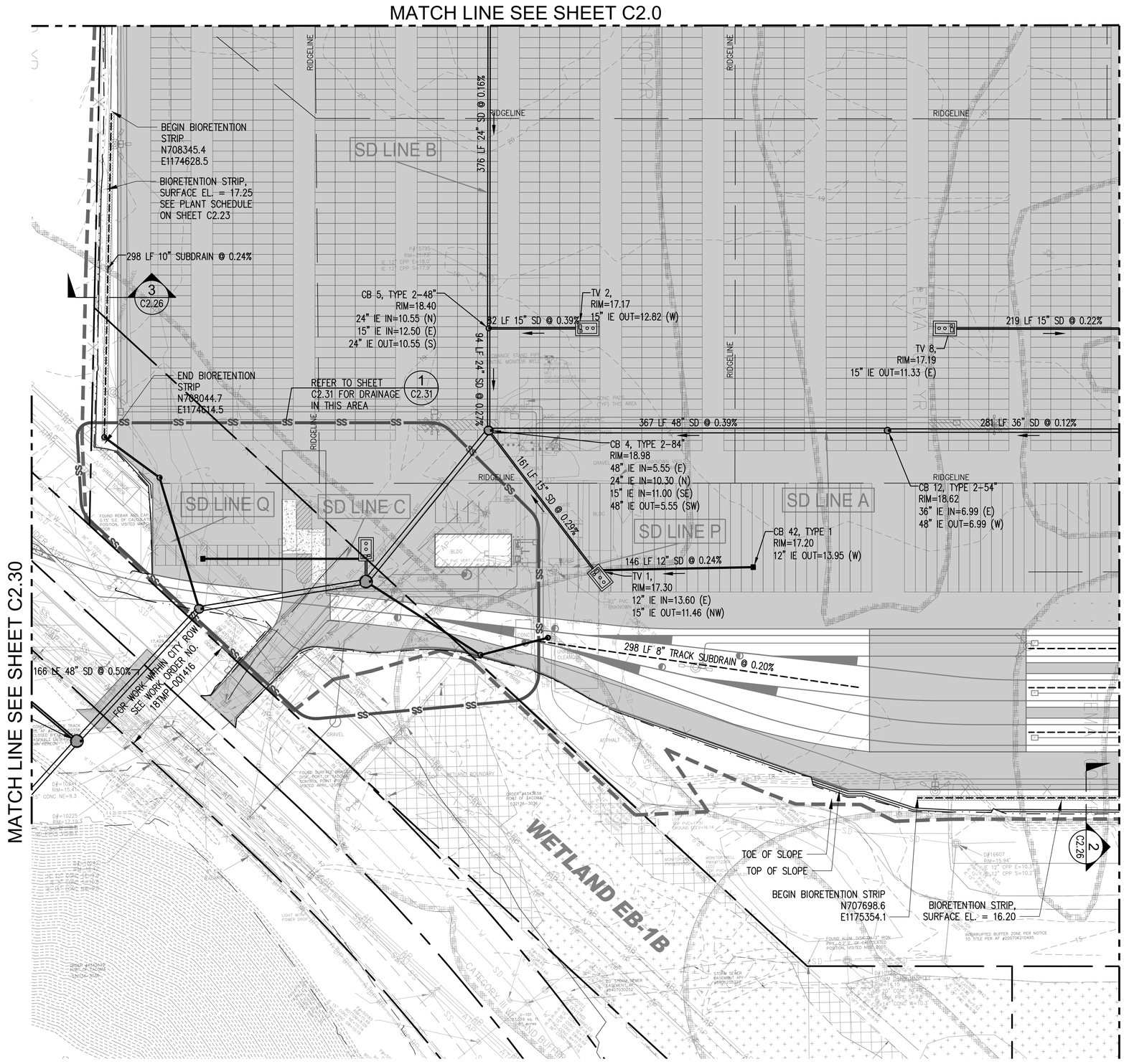

GRADING AND DRAINAGE NOTES

1. PAVEMENT EDGE, SEE 3/C3.7
2. OUTFALL PROTECTION, SEE 1/C2.25
3. CONSTRUCT CULVERT PROTECTION SLAB PER 2/C1.16

NOTES

1. REFER TO SHEETS D1.0 THRU D1.6 FOR AREAS OF KNOWN REMNANT CONTAMINATION, AREAS OF REMEDIATED CONTAMINATION, AND APPROXIMATE LOCATION OF BURIED CONCRETE FOUNDATIONS.
2. PROPOSED CONTOURS REPRESENT TOP OF PAVEMENT IN PAVED AREAS.
3. STRAIGHT GRADE SHALL BE MAINTAINED BETWEEN CONTOUR LINES AND SPOT ELEVATIONS UNLESS OTHERWISE SHOWN ON THE PLANS.
4. ALL FILL SOILS OR SOILS DISTURBED OR OVEREXCAVATED DURING CONSTRUCTION SHALL BE COMPACTED IN ACCORDANCE WITH THE SPECIFICATIONS.
5. STORM DRAIN PIPE SHALL BE CORRUGATED POLYETHYLENE PIPE, UNLESS OTHERWISE NOTED. REFER TO STORM DRAIN PROFILE SHEETS C2.9 THRU C2.20 FOR PIPE MATERIALS. PIPES CONNECTED TO TREATMENT VAULTS, FLOWING IN OR OUT, SHALL BE PVC
6. ALL CATCH BASIN TYPE 1 STRUCTURES SHALL BE CONSTRUCTED PER WSDOT STD PLAN B-5.20-01.
7. TYPE 1 CATCH BASINS SHALL HAVE A RECTANGULAR BI-DIRECTIONAL VANED GRATE PER WSDOT STD PLAN B-30.40-01
8. ALL CATCH BASIN TYPE 2 STRUCTURES SHALL BE CONSTRUCTED PER WSDOT STD PLAN B-10.20-01.
9. ALL PIPE MATERIALS, JOINTS, AND PROTECTIVE TREATMENTS SHALL BE IN ACCORDANCE WITH SECTION 9.05 OF THE 2018 WSDOT STANDARD SPECIFICATIONS.
10. ALL CATCH BASIN, MANHOLE AND TREATMENT VAULT BLOCKOUTS SHALL BE FITTED WITH PRECAST COMPRESSSION GASKET CONNECTION OR FLEXIBLE BOOT CONNECTION. SEE SHEET C2.6, NOTE 6.
11. PROVIDE CLEANOUT ON UPSTREAM END OF ALL SUBDRAIN AND ALL TIGHTLINE PIPES, AND MIDWAY ALONG SUBDRAIN AND ALL TIGHTLINE PIPES GREATER THAN 300 FEET LONG. REFER TO 3/C2.21 AND 5/C2.21
12. REFER TO SHEETS U1.0 THRU U1.5 FOR UTILITIES.
13. FOR TYPICAL TRACK SUBDRAIN INSTALLATION, REFER TO 3/C2.27

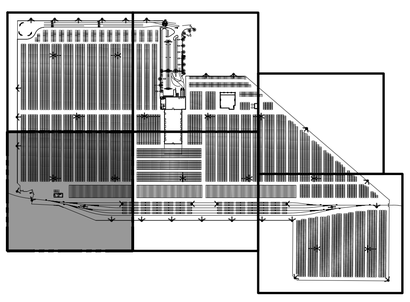

N

KEY PLAN
NTS

Port of Tacoma
P.O. BOX 1837 TACOMA, WA 98401 (253)383-5841

kpff
2407 North 31st Street, Suite 100
Tacoma, WA 98407
(253) 396-0150 Fax (253) 396-0162

MARK:	REVISION:	BY:	APPR:	DATE:

NADEEM KINCEY WASHINGTON STATE REGISTERED PROFESSIONAL ENGINEER 52791

CMB	5/7/2018	
CHECKED BY		DATE
SWK	5/9/2018	
PROJ. ENGR		DATE
PRINTED BY: cbennett May 10, 2018		
PORT ADDRESS: ONE SITCUM PLAZA		
TACOMA WA, 98401-1837		

APPROVED:

DIRECTOR ENG. DATE

PARCEL 77 AUTO IMPORT TERMINAL

GRADING & DRAINAGE
AREA 3

C2.2

52 OF 163

CONT/CONS: 070770	TOWNSHIP: 21N	RANGE: 3E	SECTION: 36
M. ID: 201020.01	DAT-HRZ: W83-SF	VERT: PORT OF TACOMA BM#	
PHASE: BID SET	PARCEL: MULTIPLE	DRAWING SCALE: AS SHOWN	

THIS DRAWING IS THE PROPERTY OF THE PORT OF TACOMA AND SHALL NOT BE USED ON OTHER WORK, DISCLOSED, COPIED, IN WHOLE OR IN PART, WITHOUT WRITTEN PERMISSION

BINDING EDGE
PORT OF TACOMA FILE: C:\Users\cbennett\appdata\local\temp\AcPublish_9906\C2.0-C2.5 GRADING DRAINAGE AND UTILITY PLANS

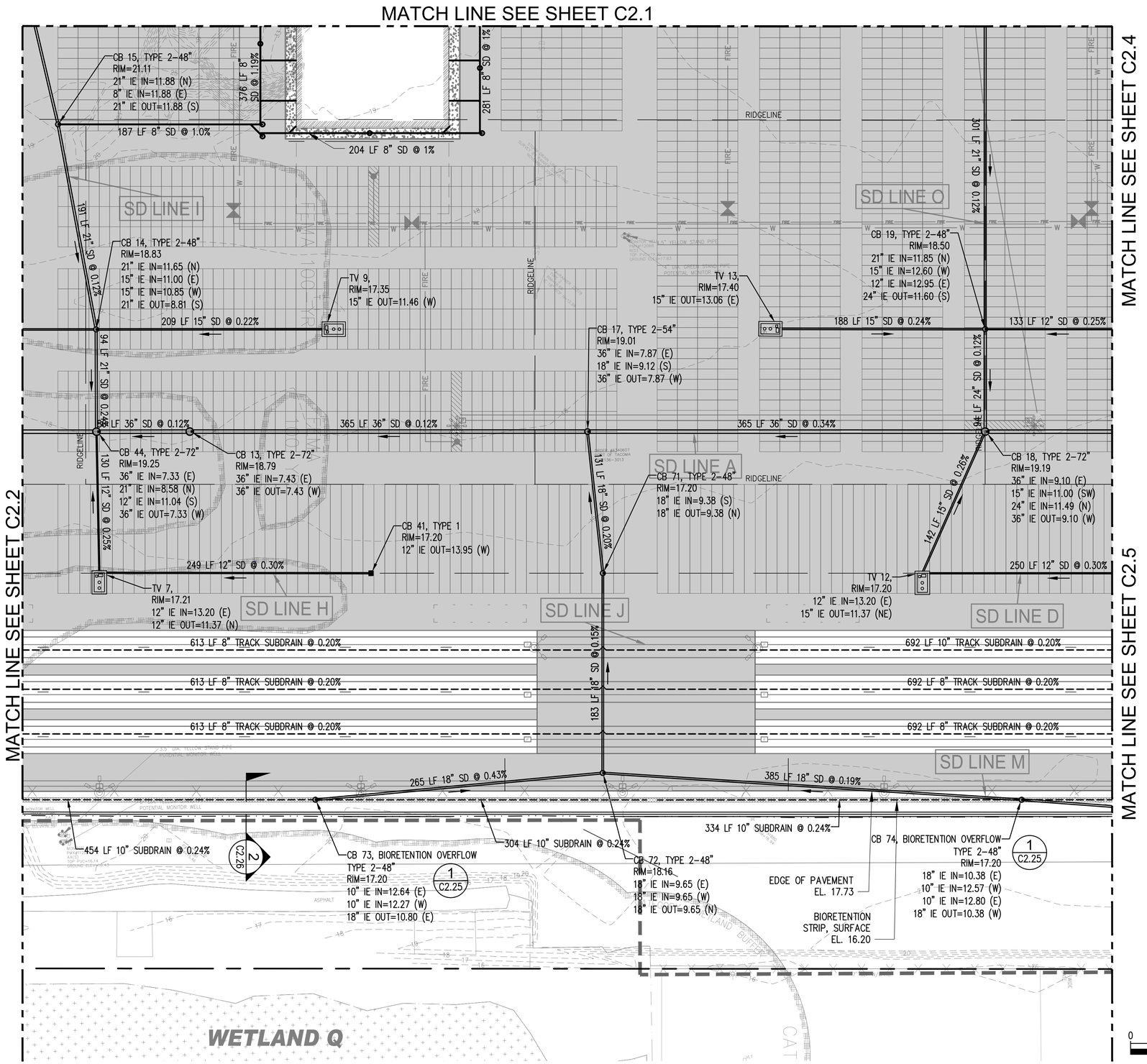

GRADING AND DRAINAGE NOTES

1. PAVEMENT EDGE, SEE 3/C3.7
2. OUTFALL PROTECTION, SEE 1/C2.25
3. CONSTRUCT CULVERT PROTECTION SLAB PER 2/C1.16

NOTES

1. REFER TO SHEETS D1.0 THRU D1.6 FOR AREAS OF KNOWN REMNANT CONTAMINATION, AREAS OF REMEDIATED CONTAMINATION, AND APPROXIMATE LOCATION OF BURIED CONCRETE FOUNDATIONS.
2. PROPOSED CONTOURS REPRESENT TOP OF PAVEMENT IN PAVED AREAS.
3. STRAIGHT GRADE SHALL BE MAINTAINED BETWEEN CONTOUR LINES AND SPOT ELEVATIONS UNLESS OTHERWISE SHOWN ON THE PLANS.
4. ALL FILL SOILS OR SOILS DISTURBED OR OVEREXCAVATED DURING CONSTRUCTION SHALL BE COMPACTED IN ACCORDANCE WITH THE SPECIFICATIONS.
5. STORM DRAIN PIPE SHALL BE CORRUGATED POLYETHYLENE PIPE, UNLESS OTHERWISE NOTED. REFER TO STORM DRAIN PROFILE SHEETS C2.9 THRU C2.20 FOR PIPE MATERIALS. PIPES CONNECTED TO TREATMENT VAULTS, FLOWING IN OR OUT, SHALL BE PVC
6. ALL CATCH BASIN TYPE 1 STRUCTURES SHALL BE CONSTRUCTED PER WSDOT STD PLAN B-5.20-01.
7. TYPE 1 CATCH BASINS SHALL HAVE A RECTANGULAR BI-DIRECTIONAL VANED GRATE PER WSDOT STD PLAN B-30.40-01
8. ALL CATCH BASIN TYPE 2 STRUCTURES SHALL BE CONSTRUCTED PER WSDOT STD PLAN B-10.20-01.
9. ALL PIPE MATERIALS, JOINTS, AND PROTECTIVE TREATMENTS SHALL BE IN ACCORDANCE WITH SECTION 9.05 OF THE 2018 WSDOT STANDARD SPECIFICATIONS.
10. ALL CATCH BASIN, MANHOLE AND TREATMENT VAULT BLOCKOUTS SHALL BE FITTED WITH PRECAST COMPRESSSION GASKET CONNECTION OR FLEXIBLE BOOT CONNECTION. SEE SHEET C2.6, NOTE 6.
11. PROVIDE CLEANOUT ON UPSTREAM END OF ALL SUBDRAIN AND ALL TIGHTLINE PIPES, AND MIDWAY ALONG SUBDRAIN AND ALL TIGHTLINE PIPES GREATER THAN 300 FEET LONG. REFER TO 3/C2.21 AND 5/C2.21
12. REFER TO SHEETS U1.0 THRU U1.5 FOR UTILITIES.
13. FOR TYPICAL TRACK SUBDRAIN INSTALLATION, REFER TO 3/C2.27

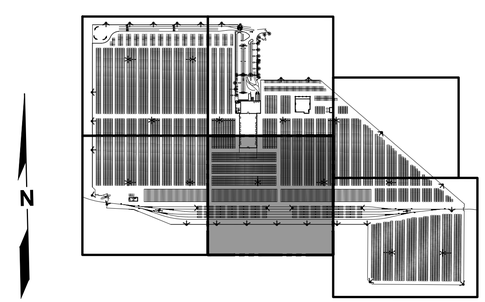

KEY PLAN
NTS

Port of Tacoma
P.O. BOX 1837 TACOMA, WA 98401 (253)383-5841
kpff
2407 North 31st Street, Suite 100
Tacoma, WA 98407
(253) 396-0150 Fax (253) 396-0162

MARK:	REVISION:	BY:	APPR:	DATE:

CMB	5/7/2018	
CHECKED BY	DATE	
SWK	5/9/2018	
DIRECTOR ENG.	DATE	
PROJ. ENGR	DATE	
APPROVED:		

PARCEL 77 AUTO IMPORT TERMINAL

GRADING & DRAINAGE
AREA 4

PRINTED BY: cbennett May 10, 2018
PORT ADDRESS: ONE SITCUM PLAZA
TACOMA WA, 98401-1837

TOWNSHIP: 21N	RANGE: 3E	SECTION: 36	
DAT-HRZ: W83-SF	VERT: PORT OF TACOMA BM#		
PARCEL: MULTIPLE	DRAWING SCALE: AS SHOWN		

C2.3
53 OF 163

CONT/CONS:	070770
M. ID:	201020.01
PHASE:	BID SET

THIS DRAWING IS THE PROPERTY OF THE PORT OF TACOMA AND SHALL NOT BE USED ON OTHER WORK, DISCLOSED, COPIED, IN WHOLE OR IN PART, WITHOUT WRITTEN PERMISSION

PORT OF TACOMA FILE: C:\Users\cbennett\appdata\local\temp\AcPublish_9906\C2.0-C2.5 GRADING DRAINAGE AND UTILITY PLANS
BINDING EDGE

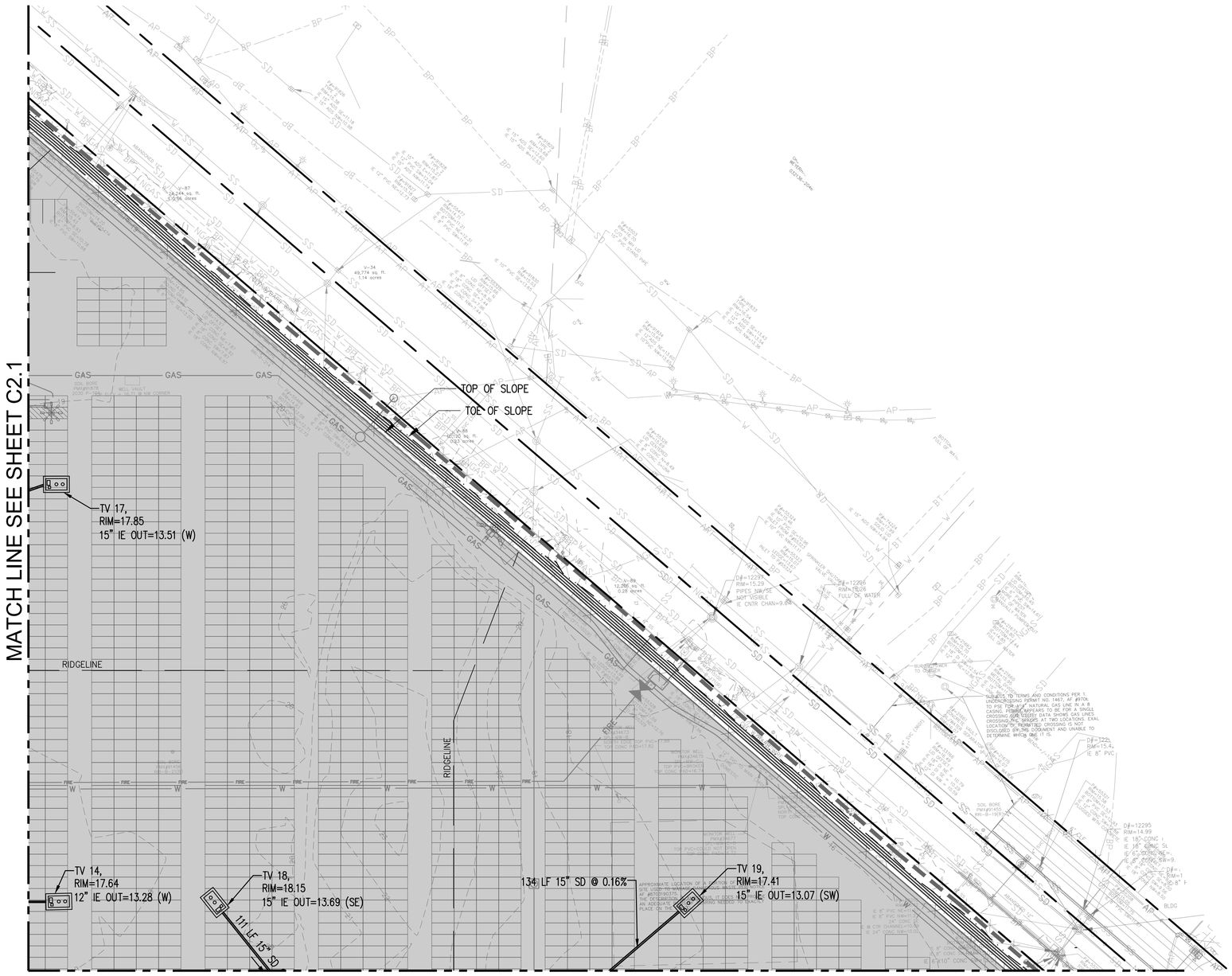

GRADING AND DRAINAGE NOTES

1. PAVEMENT EDGE, SEE 3 / C3.7
2. OUTFALL PROTECTION, SEE 1 / C2.25
3. CONSTRUCT CULVERT PROTECTION SLAB PER 2 / C1.16

NOTES

1. REFER TO SHEETS D1.0 THRU D1.6 FOR AREAS OF KNOWN REMNANT CONTAMINATION, AREAS OF REMEDIATED CONTAMINATION, AND APPROXIMATE LOCATION OF BURIED CONCRETE FOUNDATIONS.
2. PROPOSED CONTOURS REPRESENT TOP OF PAVEMENT IN PAVED AREAS.
3. STRAIGHT GRADE SHALL BE MAINTAINED BETWEEN CONTOUR LINES AND SPOT ELEVATIONS UNLESS OTHERWISE SHOWN ON THE PLANS.
4. ALL FILL SOILS OR SOILS DISTURBED OR OVEREXCAVATED DURING CONSTRUCTION SHALL BE COMPACTED IN ACCORDANCE WITH THE SPECIFICATIONS.
5. STORM DRAIN PIPE SHALL BE CORRUGATED POLYETHYLENE PIPE, UNLESS OTHERWISE NOTED. REFER TO STORM DRAIN PROFILE SHEETS C2.9 THRU C2.20 FOR PIPE MATERIALS. PIPES CONNECTED TO TREATMENT VAULTS, FLOWING IN OR OUT, SHALL BE PVC
6. ALL CATCH BASIN TYPE 1 STRUCTURES SHALL BE CONSTRUCTED PER WSDOT STD PLAN B-5.20-01.
7. TYPE 1 CATCH BASINS SHALL HAVE A RECTANGULAR BI-DIRECTIONAL VANED GRATE PER WSDOT STD PLAN B-30.40-01
8. ALL CATCH BASIN TYPE 2 STRUCTURES SHALL BE CONSTRUCTED PER WSDOT STD PLAN B-10.20-01.
9. ALL PIPE MATERIALS, JOINTS, AND PROTECTIVE TREATMENTS SHALL BE IN ACCORDANCE WITH SECTION 9.05 OF THE 2018 WSDOT STANDARD SPECIFICATIONS.
10. ALL CATCH BASIN, MANHOLE AND TREATMENT VAULT BLOCKOUTS SHALL BE FITTED WITH PRECAST COMPRESSSION GASKET CONNECTION OR FLEXIBLE BOOT CONNECTION. SEE SHEET C2.6, NOTE 6.
11. PROVIDE CLEANOUT ON UPSTREAM END OF ALL SUBDRAIN AND ALL TIGHTLINE PIPES, AND MIDWAY ALONG SUBDRAIN AND ALL TIGHTLINE PIPES GREATER THAN 300 FEET LONG. REFER TO 3 / C2.21 AND 5 / C2.21
12. REFER TO SHEETS U1.0 THRU U1.5 FOR UTILITIES.
13. FOR TYPICAL TRACK SUBDRAIN INSTALLATION, REFER TO 3 / C2.27

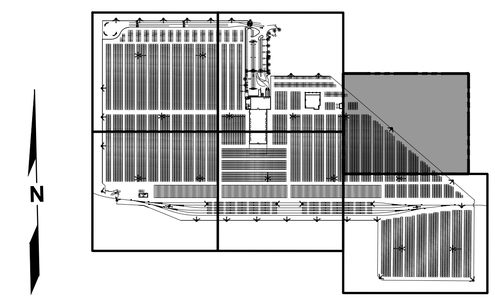

KEY PLAN
NTS

0 50 100 150
SCALE IN FEET

Port of Tacoma
P.O. BOX 1837 TACOMA, WA 98401 (253)383-5841

kpff
2407 North 31st Street, Suite 100
Tacoma, Washington 98407
(253) 396-0150 Fax (253) 396-0162

MARK:	REVISION:	BY:	APPR:	DATE:

CMB 5/7/2018
CHECKED BY DATE
SWK 5/9/2018
PROJ. ENGR DATE
cbennett May 10, 2018
DIRECTOR ENG. DATE
PRINTED BY:
APPROVED:

PARCEL 77 AUTO IMPORT TERMINAL

GRADING & DRAINAGE
AREA 5

TOWNSHIP: 21N	RANGE: 3E	SECTION: 36	
DAT-HRZ: W83-SF	VERT: PORT OF TACOMA BM#		
PARCEL: MULTIPLE	DRAWING SCALE: AS SHOWN		

PORT ADDRESS: ONE SITCUM PLAZA TACOMA WA, 98401-1837

C2.4
54 OF 163

CONT/CONS: 070770
M. ID: 201020.01
PHASE: BID SET

THIS DRAWING IS THE PROPERTY OF THE PORT OF TACOMA AND SHALL NOT BE USED ON OTHER WORK, DISCLOSED, COPIED, IN WHOLE OR IN PART, WITHOUT WRITTEN PERMISSION

BINDING EDGE
PORT OF TACOMA FILE: C:\Users\cbennett\appdata\local\temp\AcPublish_9906\C2.0-C2.5 GRADING DRAINAGE AND UTILITY PLANS

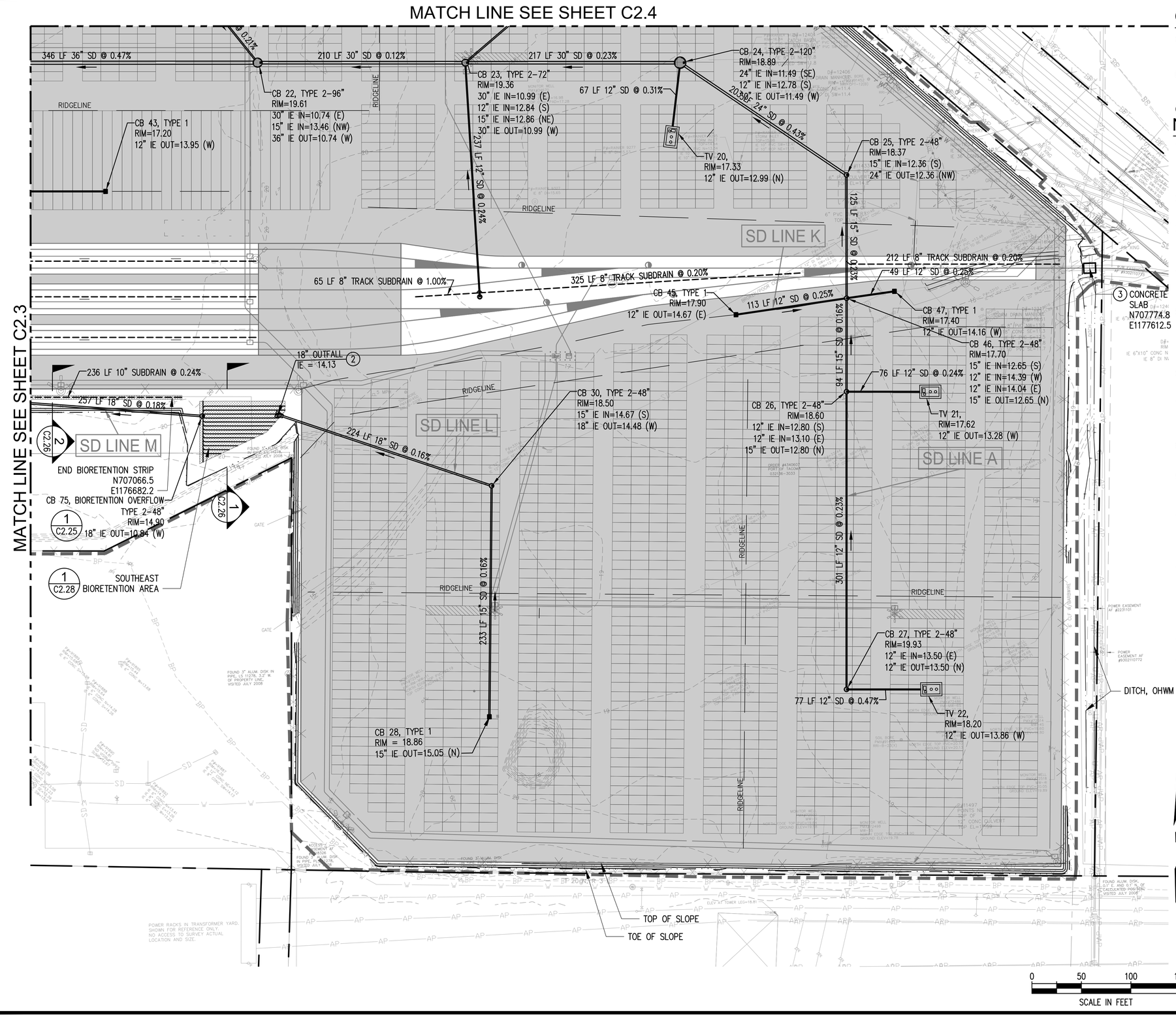

GRADING AND DRAINAGE NOTES

1. PAVEMENT EDGE, SEE 3/C3.7
2. OUTFALL PROTECTION, SEE 1/C2.25
3. CONSTRUCT CULVERT PROTECTION SLAB PER 2/C1.16

NOTES

1. REFER TO SHEETS D1.0 THRU D1.6 FOR AREAS OF KNOWN REMNANT CONTAMINATION, AREAS OF REMEDIATED CONTAMINATION, AND APPROXIMATE LOCATION OF BURIED CONCRETE FOUNDATIONS.
2. PROPOSED CONTOURS REPRESENT TOP OF PAVEMENT IN PAVED AREAS.
3. STRAIGHT GRADE SHALL BE MAINTAINED BETWEEN CONTOUR LINES AND SPOT ELEVATIONS UNLESS OTHERWISE SHOWN ON THE PLANS.
4. ALL FILL SOILS OR SOILS DISTURBED OR OVEREXCAVATED DURING CONSTRUCTION SHALL BE COMPACTED IN ACCORDANCE WITH THE SPECIFICATIONS.
5. STORM DRAIN PIPE SHALL BE CORRUGATED POLYETHYLENE PIPE, UNLESS OTHERWISE NOTED. REFER TO STORM DRAIN PROFILE SHEETS C2.9 THRU C2.20 FOR PIPE MATERIALS. PIPES CONNECTED TO TREATMENT VAULTS, FLOWING IN OR OUT, SHALL BE PVC
6. ALL CATCH BASIN TYPE 1 STRUCTURES SHALL BE CONSTRUCTED PER WSDOT STD PLAN B-5.20-01.
7. TYPE 1 CATCH BASINS SHALL HAVE A RECTANGULAR BI-DIRECTIONAL VANED GRATE PER WSDOT STD PLAN B-30.40-01
8. ALL CATCH BASIN TYPE 2 STRUCTURES SHALL BE CONSTRUCTED PER WSDOT STD PLAN B-10.20-01.
9. ALL PIPE MATERIALS, JOINTS, AND PROTECTIVE TREATMENTS SHALL BE IN ACCORDANCE WITH SECTION 9.05 OF THE 2018 WSDOT STANDARD SPECIFICATIONS.
10. ALL CATCH BASIN, MANHOLE AND TREATMENT VAULT BLOCKOUTS SHALL BE FITTED WITH PRECAST COMPRESSSION GASKET CONNECTION OR FLEXIBLE BOOT CONNECTION. SEE SHEET C2.6, NOTE 6.
11. PROVIDE CLEANOUT ON UPSTREAM END OF ALL SUBDRAIN AND ALL TIGHTLINE PIPES, AND MIDWAY ALONG SUBDRAIN AND ALL TIGHTLINE PIPES GREATER THAN 300 FEET LONG. REFER TO 3/C2.21 AND 5/C2.21
12. REFER TO SHEETS U1.0 THRU U1.5 FOR UTILITIES.
13. FOR TYPICAL TRACK SUBDRAIN INSTALLATION, REFER TO 3/C2.27

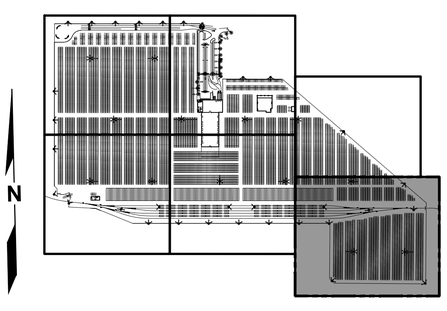

KEY PLAN
NTS

Port of Tacoma
P.O. BOX 1837 TACOMA, WA 98401 (253)383-5841

kpff
2407 North 31st Street, Suite 100
Tacoma, WA 98407-3220
(253) 396-0130 Fax (253) 396-0162

MARK:	REVISION:	BY:	APPR:	DATE:

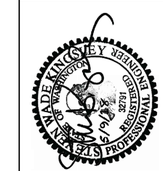

CMB	5/7/2018	APPROVED:	
CHECKED BY	DATE		
SWK	5/9/2018	DIRECTOR ENG.	DATE
PROJ. ENGR	DATE		
PRINTED BY: cbennett May 10, 2018			
PORT ADDRESS: ONE SITCUM PLAZA TACOMA WA, 98401-1837			

PARCEL 77 AUTO IMPORT TERMINAL

GRADING & DRAINAGE
AREA 6

TOWNSHIP: 21N	RANGE: 3E	SECTION: 36	
DAT-HRZ: W83-SF	VERT: PORT OF TACOMA BM#		
PARCEL: MULTIPLE	DRAWING SCALE: AS SHOWN		

C2.5
55 OF 163

CONT/CONS:	070770
M. ID:	201020.01
PHASE:	BID SET

THIS DRAWING IS THE PROPERTY OF THE PORT OF TACOMA AND SHALL NOT BE USED ON OTHER WORK, DISCLOSED, COPIED, IN WHOLE OR IN PART, WITHOUT WRITTEN PERMISSION

BINDING EDGE
PORT OF TACOMA FILE: C:\Users\cbennett\appdata\local\temp\AcPublish_9906\C2.0-C2.5 GRADING DRAINAGE AND UTILITY PLANS

GRADING GENERAL NOTES:

1. PROPOSED CONTOURS REPRESENT TOP OF PAVEMENT IN PAVED AREAS.
2. STRAIGHT GRADE SHALL BE MAINTAINED BETWEEN CONTOUR LINES AND SPOT ELEVATIONS UNLESS OTHERWISE SHOWN ON THE PLANS.
3. ALL FILL SOILS OR SOILS DISTURBED OR OVEREXCAVATED DURING CONSTRUCTION SHALL BE COMPACTED IN ACCORDANCE WITH THE SPECIFICATIONS.
4. REFER TO SHEETS U1.0 THRU U1.5 FOR UTILITIES.

STORM DRAINAGE GENERAL NOTES:

1. ALL CATCH BASIN TYPE 1 STRUCTURES SHALL BE CONSTRUCTED PER WSDOT STD PLAN B-5.20-01.
2. TYPE 1 CATCH BASINS SHALL HAVE A RECTANGULAR BI-DIRECTIONAL VANED GRATE PER WSDOT STD PLAN B-30.40-01.
3. ALL CATCH BASIN TYPE 2 STRUCTURES SHALL BE CONSTRUCTED PER WSDOT STD PLAN B-10.20-01 AND MODIFIED FOR LOAD CONDITIONS ON SHEET C-2.00.
4. SEE DRAINAGE PROFILES FOR STRUCTURE TYPES, SIZES, AND RIM ELEVATIONS.
5. ALL PIPE MATERIALS, JOINTS, AND PROTECTIVE TREATMENTS SHALL BE IN ACCORDANCE WITH SECTION 9.05 OF THE 2012 WSDOT STANDARD SPECIFICATIONS AND AASHTO AND ASTM TREATMENT STANDARDS.
6. ALL CATCH BASIN AND MANHOLE KNOCKOUTS SHALL BE FITTED WITH PRECAST COMPRESSION GASKET CONNECTION, FLEXIBLE BOOT CONNECTION. FLEXIBLE BOOT CONNECTORS SHALL BE MANUFACTURED FOR THE PIPE MATERIAL AND DIAMETER TO BE CONNECTED, AND SHALL INCLUDE CORRUGATED PIPE ADAPTORS WHERE NECESSARY. GROUTED CONNECTIONS SHALL NOT BE ALLOWED UNLESS OTHERWISE NOTED.
7. CORRUGATED POLYETHYLENE PIPES WITH DIAMETERS 12 THROUGH 30 INCH SHALL HAVE A SMOOTH INTERIOR AND ANNULAR EXTERIOR CORRUGATIONS AND MEET OR EXCEED ASTM F2736 AND AASHTO MP-21. PIPES WITH DIAMETERS BETWEEN 36 AND 60 INCHES SHALL HAVE SMOOTH INTERIOR AND ANNULAR EXTERIOR CORRUGATIONS AND MEET OR EXCEED ASTM F2881 AND AASHTO MP-21 AND POLYPROPYLENE SHALL BE AN IMPACT MODIFIED COPOLYMER.
8. WHERE CALLED FOR IN THE PLANS, POLYVINYL CHLORIDE (PVC) PIPE SHALL BE ASTM D3034 SDR35 FOR PIPE DIAMETERS LESS THAN OR EQUAL TO 15 INCHES AND PVC PIPE SHALL MEET ASTM F679 FOR PVC PIPE DIAMETERS GREATER THAN 15 INCHES.
9. CONTRACTOR SHALL CALL FOR UTILITY LOCATES AND LOCATE EXISTING UTILITIES IN THE ROADWAY AND ON-SITE BEFORE DEMOLITION OR EXCAVATION.

STORMWATER STRUCTURE HORIZONTAL CONTROL POINTS

NAME	NORTHING	EASTING
CB 1	707769.26	1174582.70
CB 2	707888.17	1174697.96
CB 3	707909.53	1174851.98
CB 4	708045.75	1174968.00
CB 5	708139.72	1174970.25
CB 6	708515.60	1174979.83
CB 7	709240.72	1175703.94
CB 8	708797.26	1174986.02
CB 9	707934.12	1174702.52
CB 10	708647.61	1175551.16
CB 11	707839.61	1174955.61
CB 12	708036.96	1175334.60
CB 13	708028.17	1175701.20
CB 14	708123.98	1175617.49
CB 15	708312.99	1175587.07
CB 16	708502.15	1175547.65
CB 17	708019.42	1176066.05
CB 18	708010.62	1176430.88
CB 19	708104.65	1176433.14
CB 20	708405.16	1176440.35
CB 21	708445.31	1176336.93
CB 22	708002.44	1176776.79
CB 23	707997.38	1176986.59
CB 24	707992.15	1177203.68
CB 25	707874.79	1177369.06
CB 26	707655.89	1177363.81
CB 27	707355.18	1177356.60
CB 28	707336.21	1176995.06
CB 30	707569.43	1177002.94
CB 31	709057.40	1174756.21
CB 32	709263.96	1174730.64
CB 33	709258.46	1174900.06
CB 34	709254.65	1175070.02
CB 35	709250.84	1175239.98
CB 36	709247.02	1175409.94
CB 37	709243.04	1175588.22
CB 38	709096.22	1175065.01
CB 39	709090.18	1175312.08
CB 40	709086.84	1175478.90
CB 41	707894.22	1175864.29

STORMWATER STRUCTURE HORIZONTAL CONTROL POINTS

NAME	NORTHING	EASTING
CB 42	707914.32	1175208.20
CB 43	707876.11	1176619.99
CB 44	708030.12	1175615.58
CB 45	707736.33	1177253.98
CB 46	707750.26	1177366.16
CB 47	707756.07	1177414.66
CB 48	709081.75	1175623.79
CB 49	709080.61	1175700.13
CB 52	709112.15	1175855.29
CB 53	708762.14	1175846.90
CB 61	709129.22	1175624.56
CB 62	709150.72	1175624.80
CB 63	709176.95	1175625.44
CB 64	709198.44	1175625.95
CB 65	709128.30	1175663.00
CB 66	709149.79	1175663.52
CB 67	709176.24	1175664.15
CB 68	709197.73	1175664.67
CB 71	707889.12	1176076.99
CB 72	707705.81	1176072.50
CB 73	707687.58	1175808.29
CB 74	707672.01	1176456.21
CB 75	707646.86	1176712.25
CB 81	708009.70	1174664.49
CB 82	708048.08	1174614.57
TV 1	707914.92	1175061.95
TV 2	708137.81	1175052.14
TV 3	708515.04	1175053.29
TV 4	708799.87	1174877.08
TV 5	708791.54	1175224.64
TV 6	708812.36	1175617.36
TV 7	707900.57	1175615.09
TV 8	708129.27	1175398.35
TV 9	708119.19	1175826.69
TV 10	708506.09	1175400.29
TV 11	708499.08	1175644.00
TV 12	707882.04	1176370.06
TV 13	708109.42	1176244.82
TV 14	708101.46	1176566.11
TV 15	708457.28	1176160.67

STORMWATER STRUCTURE HORIZONTAL CONTROL POINTS

NAME	NORTHING	EASTING
TV 16	708452.62	1176358.83
TV 17	708447.44	1176572.39
TV 18	708090.63	1176709.36
TV 19	708081.95	1177090.14
TV 20	707926.09	1177194.28
TV 21	707653.97	1177439.73
TV 22	707353.35	1177433.48
TV 23	708784.34	1176272.30
TV 24	709197.37	1175637.83
TV 25	709175.54	1175651.38
TV 26	709149.43	1175636.68
TV 27	709127.60	1175650.23
TV 28	709090.69	1175854.78
TV 29	707930.52	1174852.48
TV 30	708547.01	1174747.01

kpff
2407 North 31st Street, Suite 100
Tacoma, WA 98407
(253) 396-0150 Fax (253) 396-0162

Port of Tacoma
P.O. BOX 1837 TACOMA, WA 98401 (253)383-5841

MARK: | REVISION: | BY: | APPR: | DATE:

APPROVED:

CMB 5/7/2018
CHECKED BY DATE
SWK 5/9/2018
DIRECTOR ENG. DATE PROJ. ENGR DATE
PRINTED BY: cbennett May 10, 2018
PORT ADDRESS: ONE SITCUM PLAZA TACOMA WA, 98401-1837

PARCEL 77 AUTO IMPORT TERMINAL

GRADING AND DRAINAGE LOCATION SCHEDULE AND NOTES

TOWNSHIP: 21N | RANGE: 3E | SECTION: 36
DAT-HRZ: W83-SF | VERT: PORT OF TACOMA BM#
PARCEL: MULTIPLE | DRAWING SCALE: AS SHOWN

C2.6

56 OF 163

CONT/CONS: 070770
M. ID: 201020.01
PHASE: BID SET

THIS DRAWING IS THE PROPERTY OF THE PORT OF TACOMA AND SHALL NOT BE USED ON OTHER WORK, DISCLOSED, COPIED, IN WHOLE OR IN PART, WITHOUT WRITTEN PERMISSION

BINDING EDGE
PORT OF TACOMA FILE: C:\Users\cbennett\appdata\local\temp\AcPublish_9908\C2.6 GRADING AND DRAINAGE NOTES AND SCHEDULE

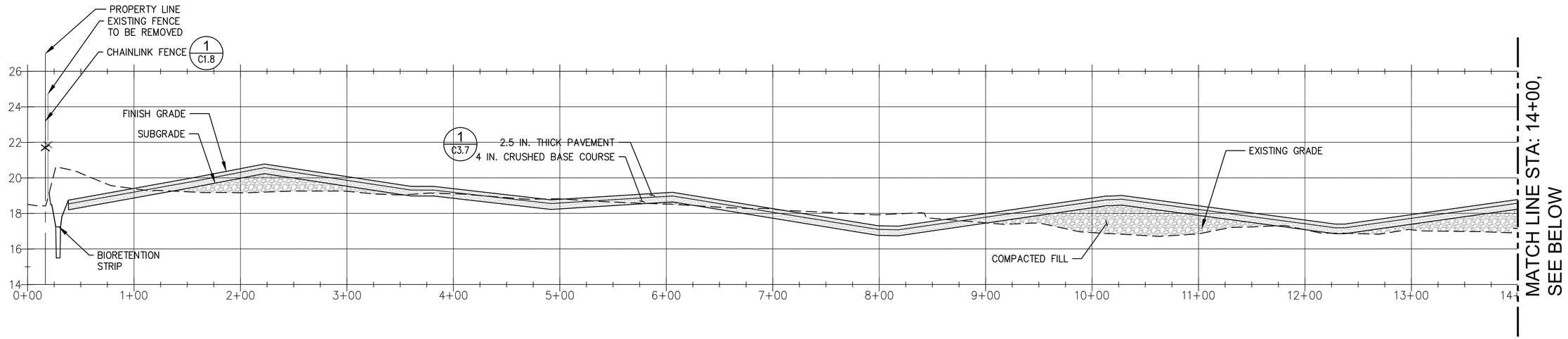

B / C2.7 E-W SITE SECTION; STA 0+00 TO 14+00

SCALE: H: 1" = 50', V: 1" = 3'

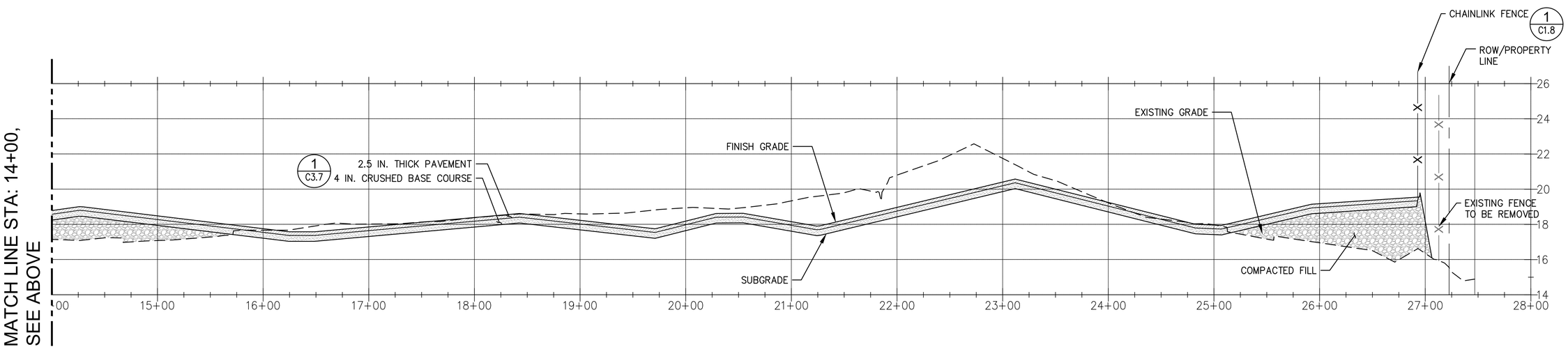

B / C2.7 E-W SITE SECTION; STA 14+00 TO 28+00

SCALE: H: 1" = 50', V: 1" = 3'

GENERAL NOTES

SECTION DOES NOT REFLECT STRIPING OF SURFICIAL SOILS AND VEGETATION, REFER TO SHEET D1.6.

Port of Tacoma
P.O. BOX 1837 TACOMA, WA 98401 (253)383-5841

kpff
2407 North 31st Street, Suite 100
Tacoma, Washington 98407
(253) 396-0150 Fax (253) 396-0162

MARK:	REVISION:	BY:	APPR:	DATE:

PARCEL 77 AUTO IMPORT TERMINAL

SITE SECTIONS

APPROVED:

CMB	5/7/2018		
CHECKED BY	DATE		
SWK	5/9/2018		
DIRECTOR ENG.	DATE	PROJ. ENGR	DATE

PRINTED BY: cbennett May 10, 2018

PORT ADDRESS: ONE SITCUM PLAZA TACOMA WA, 98401-1837

C2.7

57 OF 163

CONT/CONS: 070770	TOWNSHIP: 21N	RANGE: 3E	SECTION: 36
M. ID: 201020.01	DAT-HRZ: W83-SF	VERT: PORT OF TACOMA BM#	
PHASE: BID SET	PARCEL: MULTIPLE	DRAWING SCALE: AS SHOWN	

THIS DRAWING IS THE PROPERTY OF THE PORT OF TACOMA AND SHALL NOT BE USED ON OTHER WORK, DISCLOSED, COPIED, IN WHOLE OR IN PART, WITHOUT WRITTEN PERMISSION

BINDING EDGE

PORT OF TACOMA FILE: N:\2017\1700082 Automobile Import Terminal Planning\Part 3 - KPFF Design\3.13 Drawings\Current\30pc Design\C2.7-C2.8 SITE SECTIONS

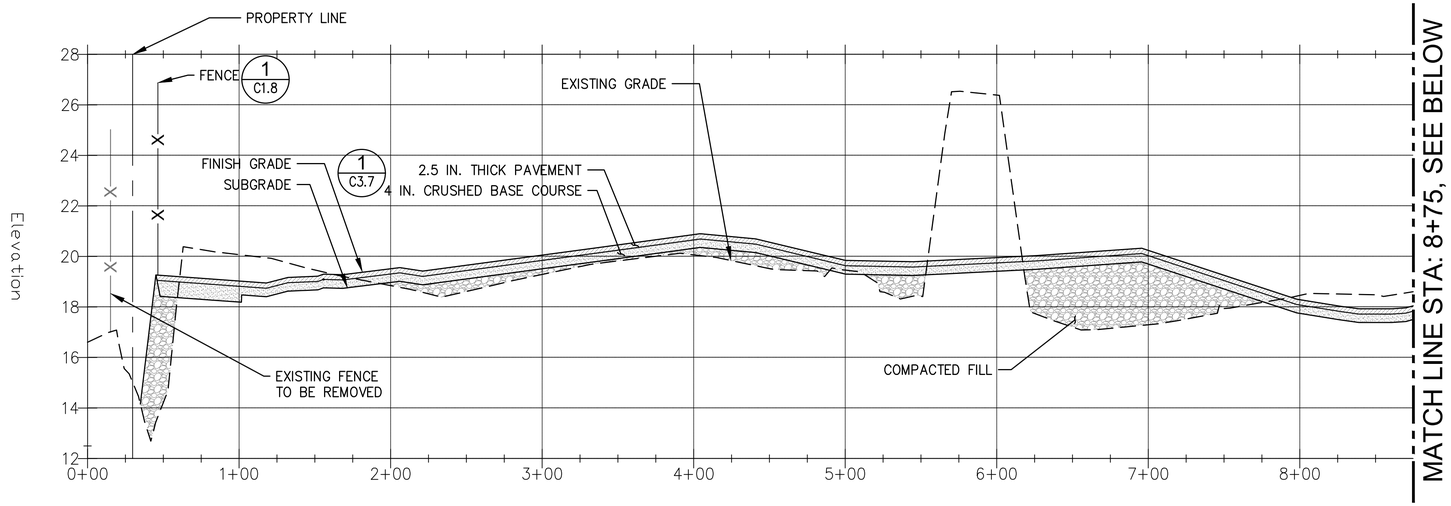

A C2.8 **N-S SITE SECTION; STA: 0+00 TO 8+75**

SCALE: H: 1" = 50', V: 1" = 3'

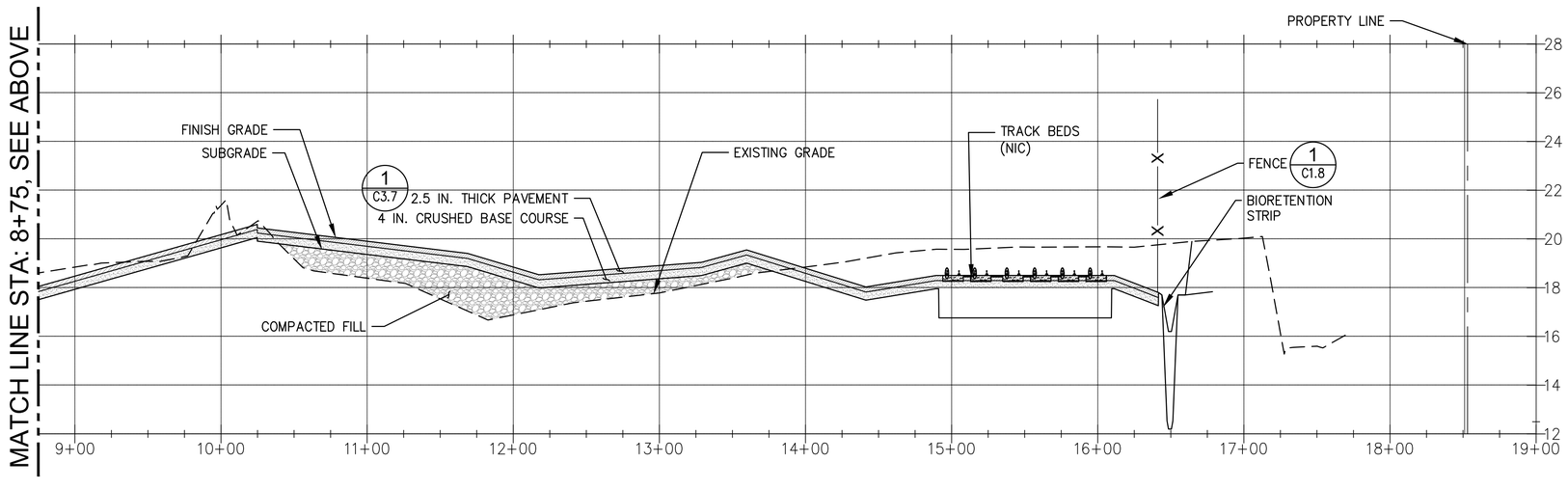

A C2.8 **N-S SITE SECTION; STA: 8+75 TO 19+00**

SCALE: H: 1" = 50', V: 1" = 3'

GENERAL NOTES

SECTION DOES NOT REFLECT STRIPING OF SURFICIAL SOILS AND VEGETATION, REFER TO SHEET D1.6

Port of Tacoma
P.O. BOX 1837 TACOMA, WA 98401 (253)383-5841

kpff
2407 North 31st Street, Suite 100
Tacoma, WA 98407
(253) 396-0150 Fax (253) 396-0162

MARK: REVISION: BY: APPR: DATE:

APPROVED:

CMB 5/7/2018
CHECKED BY DATE

SWK 5/9/2018
DIRECTOR ENG. DATE PROJ. ENGR DATE

PRINTED BY: cbennett May 10, 2018
PORT ADDRESS: ONE SITCUM PLAZA
TACOMA WA, 98401-1837

PARCEL 77 AUTO IMPORT TERMINAL

SITE SECTIONS

C2.8

58 OF 163

CONT/CONS: 070770	TOWNSHIP: 21N	RANGE: 3E	SECTION: 36
M. ID: 201020.01	DAT-HRZ: W83-SF	VERT: PORT OF TACOMA BM#	
PHASE: BID SET	PARCEL: MULTIPLE	DRAWING SCALE: AS SHOWN	

THIS DRAWING IS THE PROPERTY OF THE PORT OF TACOMA AND SHALL NOT BE USED ON OTHER WORK, DISCLOSED, COPIED, IN WHOLE OR IN PART, WITHOUT WRITTEN PERMISSION

BINDING EDGE
PORT OF TACOMA FILE: N:\2017\1700082 Automobile Import Terminal Planning\Part 3 - KPFF Design\3.13 Drawings\Current\30pc Design\C2.7-C2.8 SITE SECTIONS

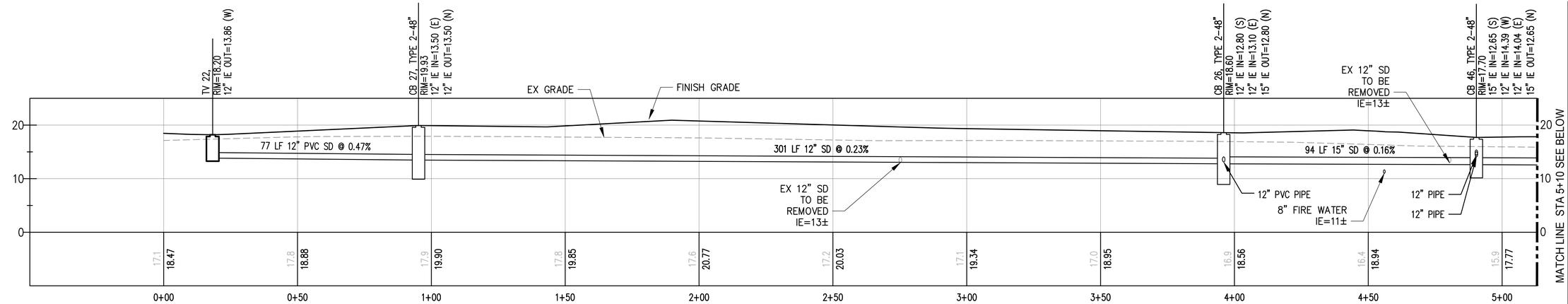

1 C2.9 SD LINE A

SCALE: HORZ 1"=20' VERT 1"=4'

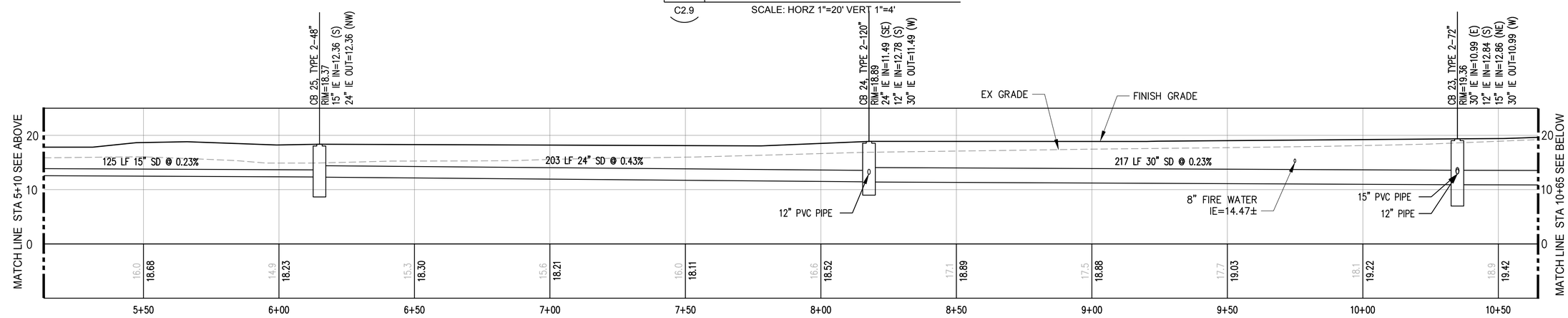

2 C2.9 SD LINE A

SCALE: HORZ 1"=20' VERT 1"=4'

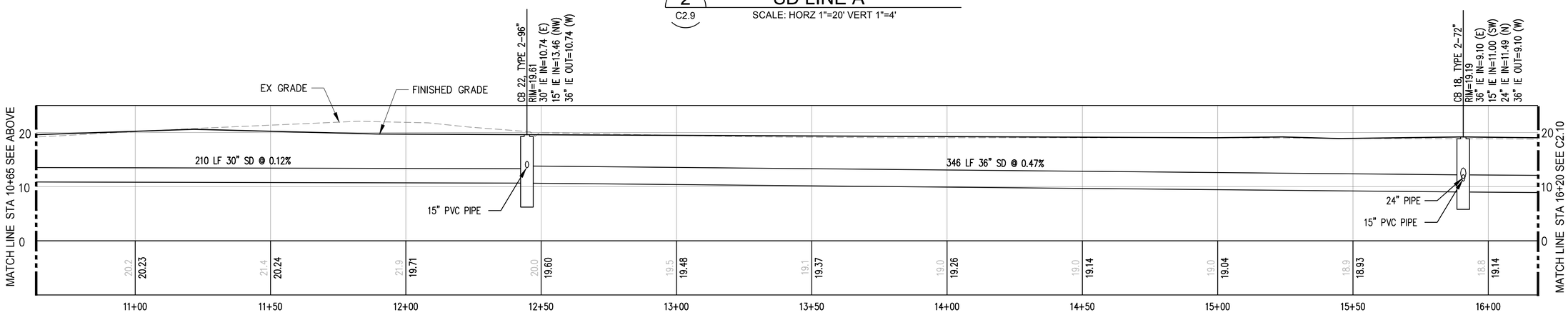

3 C2.9 SD LINE A

SCALE: HORZ 1"=20' VERT 1"=4'

GENERAL NOTES

1. ELEVATIONS SHOWN ARE IN NAVD88 VERTICAL DATUM.

0 20 40 60

SCALE IN FEET

kpff
2407 North 31st Street, Suite 100
Tacoma, WA 98407-3500
(253) 396-0150 Fax (253) 396-0162

Port of Tacoma
P.O. BOX 1837 TACOMA, WA 98401 (253)383-5841

MARK:	REVISION:	BY:	APPR:	DATE:

APPROVED:

CMB	5/7/2018	
CHECKED BY	DATE	
SWK	5/9/2018	
DIRECTOR ENG. DATE	PROJ. ENGR	DATE

PRINTED BY: cbennett May 10, 2018

PORT ADDRESS: ONE SITCUM PLAZA TACOMA WA, 98401-1837

PARCEL 77 AUTO IMPORT TERMINAL

STORM DRAINAGE PROFILES

TOWNSHIP: 21N	RANGE: 3E	SECTION: 36	
DAT-HRZ: W83-SF	VERT: PORT OF TACOMA BM#		
PARCEL: MULTIPLE	DRAWING SCALE: AS SHOWN		

C2.9

59 OF 163

CONT/CONS:	070770
M. ID:	201020.01
PHASE:	BID SET

THIS DRAWING IS THE PROPERTY OF THE PORT OF TACOMA AND SHALL NOT BE USED ON OTHER WORK, DISCLOSED, COPIED, IN WHOLE OR IN PART, WITHOUT WRITTEN PERMISSION

BINDING EDGE

PORT OF TACOMA FILE: N:\2017\1700082 Automobile Import Terminal Planning\Part 3 - KPFF Design\3.13 Drawings\Current\30pc Design\C2.9-C2.20 STORM DRAINAGE PROFILES

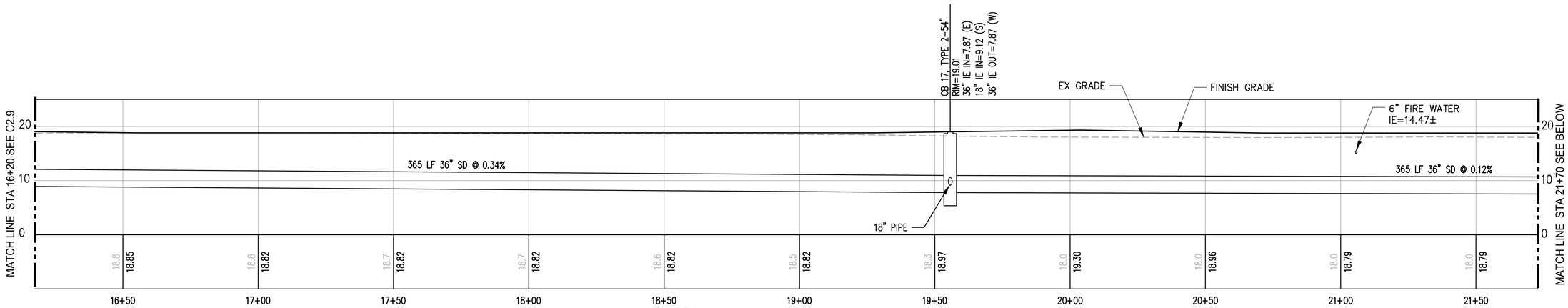

1 SD LINE A
C2.10
SCALE: HORZ 1"=20' VERT 1"=4'

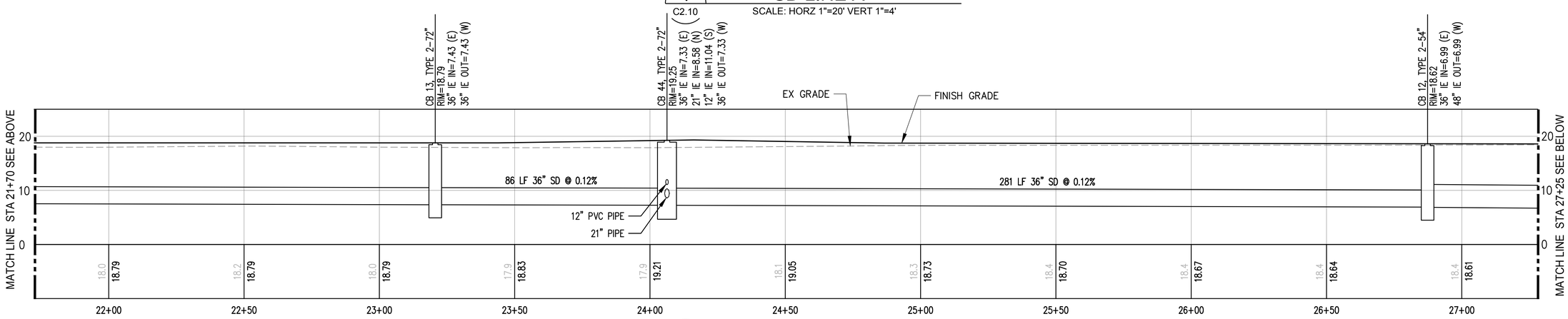

2 SD LINE A
C2.10
SCALE: HORZ 1"=20' VERT 1"=4'

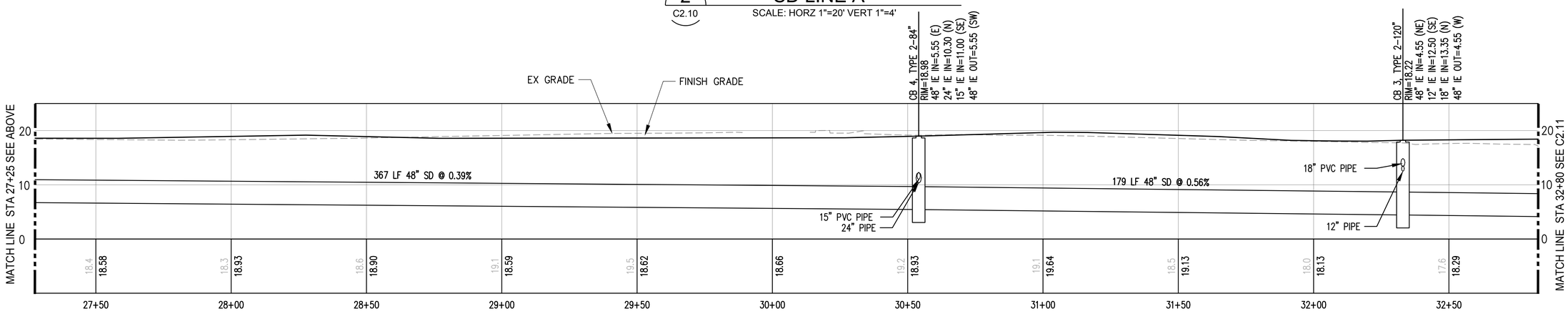

3 SD LINE A
C2.10
SCALE: HORZ 1"=20' VERT 1"=4'

GENERAL NOTES

1. ELEVATIONS SHOWN ARE IN NAVD88 VERTICAL DATUM.

0 20 40 60
SCALE IN FEET

Port of Tacoma
P.O. BOX 1837 TACOMA, WA 98401 (253)383-5841

kpff
2407 North 31st Street, Suite 100
Tacoma, Washington 98407
(253) 396-0150 Fax (253) 396-0162

MARK:	REVISION:	BY:	APPR:	DATE:

STATE OF WASHINGTON
MADE KING CHEY
32791
REGISTERED PROFESSIONAL ENGINEER
5/9/18

APPROVED:

		CMB	5/7/2018
		CHECKED BY	DATE
		SWK	5/9/2018
DIRECTOR ENG:	DATE	PROJ. ENGR	DATE
PRINTED BY:	cbennett May 10, 2018		
PORT ADDRESS:	ONE SITCUM PLAZA TACOMA WA, 98401-1837		

PARCEL 77 AUTO IMPORT TERMINAL

STORM DRAINAGE PROFILES

TOWNSHIP: 21N	RANGE: 3E	SECTION: 36	
DAT-HRZ: W83-SF	VERT: PORT OF TACOMA BM#		
PARCEL: MULTIPLE	DRAWING SCALE: AS SHOWN		

C2.10

60 OF 163

CONT/CONS:	070770
M. ID:	201020.01
PHASE:	BID SET

THIS DRAWING IS THE PROPERTY OF THE PORT OF TACOMA AND SHALL NOT BE USED ON OTHER WORK, DISCLOSED, COPIED, IN WHOLE OR IN PART, WITHOUT WRITTEN PERMISSION

PORT OF TACOMA FILE: N:\2017\1700082 Automobile Import Terminal Planning\Part 3 - KPFF Design\3.13 Drawings\Current\30pc Design\C2.9-C2.20 STORM DRAINAGE PROFILES
BINDING EDGE

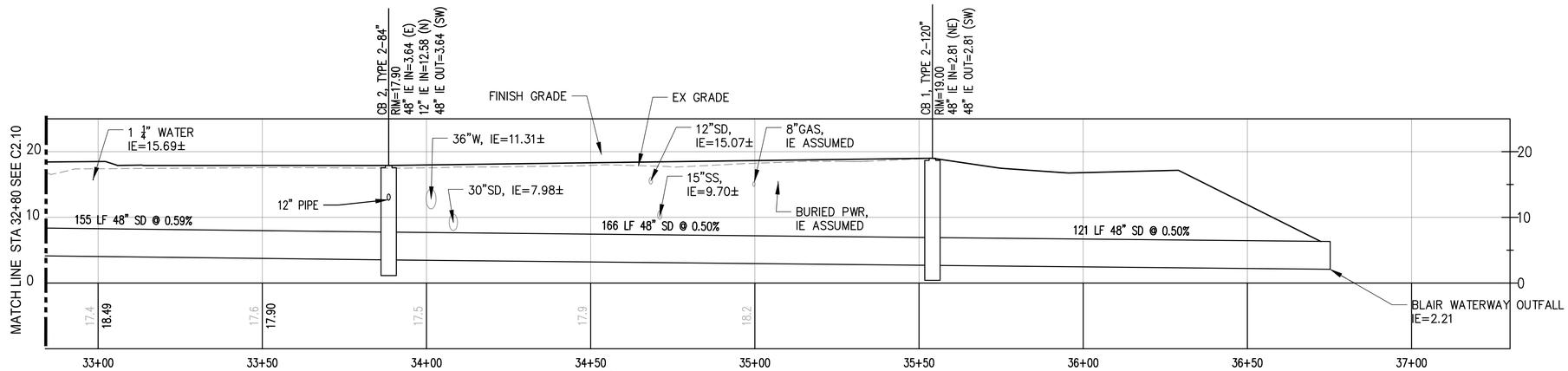

1 C2.11 SD LINE A

SCALE: HORZ 1"=20' VERT 1"=4'

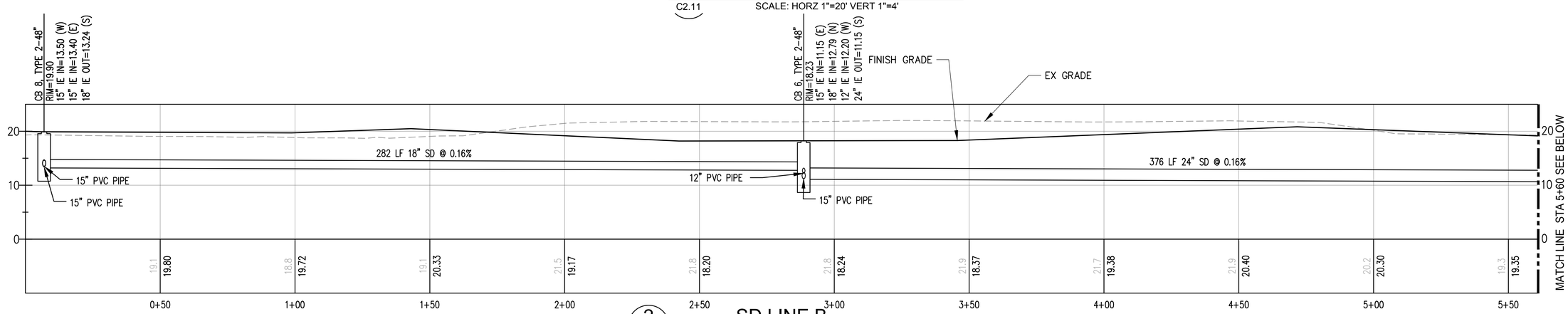

2 C2.11 SD LINE B

SCALE: HORZ 1"=20' VERT 1"=4'

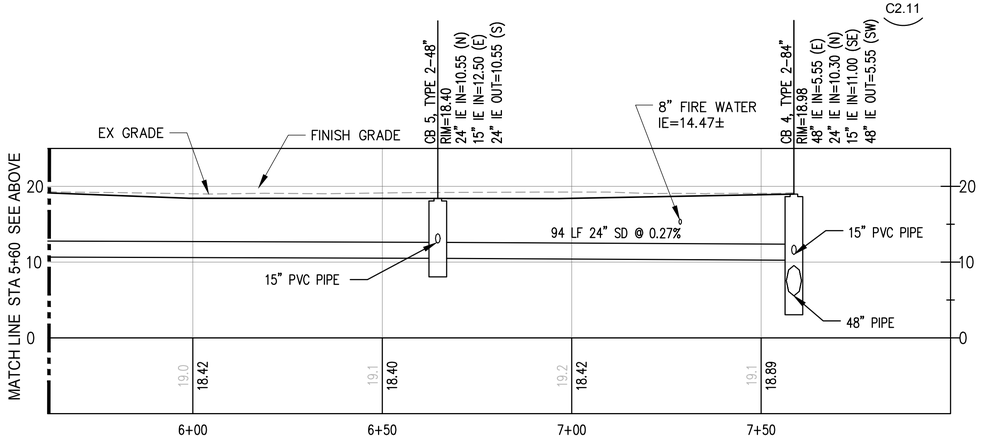

3 C2.11 SD LINE B

SCALE: HORZ 1"=20' VERT 1"=4'

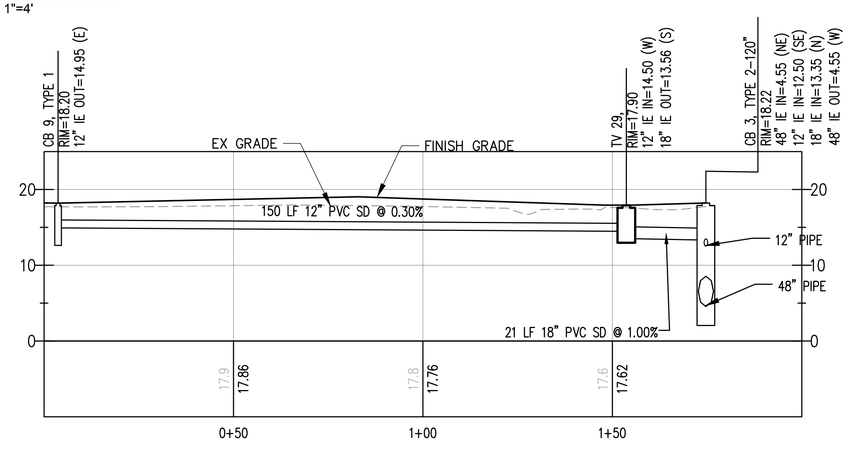

4 C2.11 SD LINE C

SCALE: HORZ 1"=20' VERT 1"=4'

0 20 40 60

SCALE IN FEET

GENERAL NOTES

1. ELEVATIONS SHOWN ARE IN NAVD88 VERTICAL DATUM.

Port of Tacoma
P.O. BOX 1837 TACOMA, WA 98401 (253)383-5841

kpff
2407 North 31st Street, Suite 100
Tacoma, WA 98407
(253) 396-0150 Fax (253) 396-0162

MARK:	REVISION:	BY:	APPR:	DATE:

NADEAN KINGSLEY
STATE OF WASHINGTON
32791
REGISTERED PROFESSIONAL ENGINEER

CMB	5/7/2018	
CHECKED BY	DATE	
SWK	5/9/2018	
DIRECTOR ENG. DATE	PROJ. ENGR	DATE

APPROVED:

PRINTED BY: cbennett May 10, 2018

PORT ADDRESS: ONE SITCUM PLAZA TACOMA WA, 98401-1837

PARCEL 77 AUTO IMPORT TERMINAL

STORM DRAINAGE PROFILES

TOWNSHIP: 21N	RANGE: 3E	SECTION: 36	
DAT-HRZ: W83-SF	VERT: PORT OF TACOMA BM#		
PARCEL: MULTIPLE	DRAWING SCALE: AS SHOWN		

C2.11

61 OF 163

CONT/CONS: 070770			
M. ID: 201020.01			
PHASE: BID SET			

THIS DRAWING IS THE PROPERTY OF THE PORT OF TACOMA AND SHALL NOT BE USED ON OTHER WORK, DISCLOSED, COPIED, IN WHOLE OR IN PART, WITHOUT WRITTEN PERMISSION

PORT OF TACOMA FILE: N:\2017\1700082 Automobile Import Terminal Planning\Part 3 - KPFF Design\3.13 Drawings\Current\30pc Design\C2.9-C2.20 STORM DRAINAGE PROFILES

BINDING EDGE

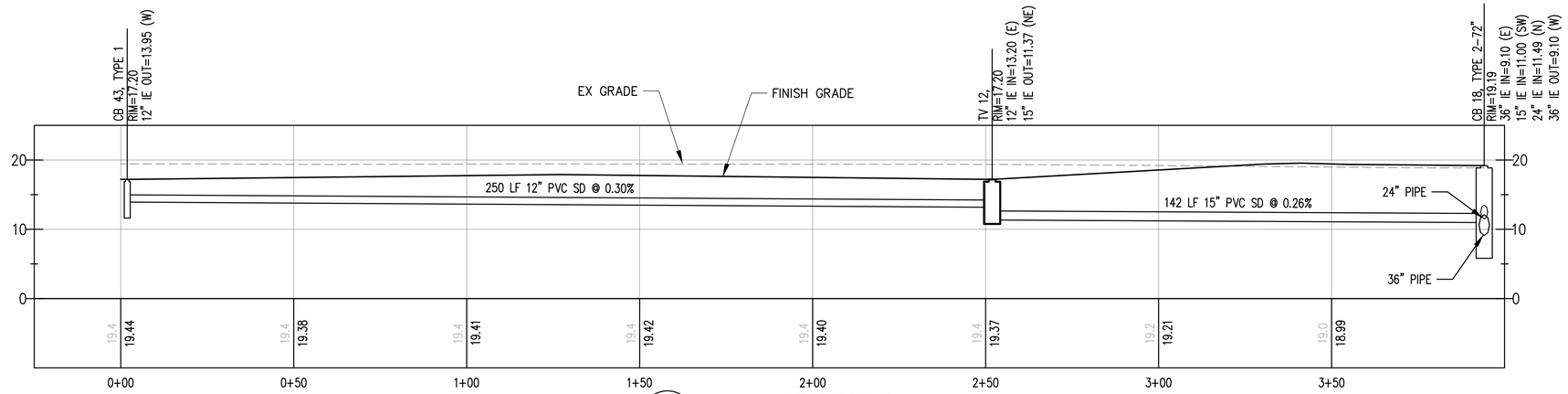

1 C2.12 SD LINE D

SCALE: HORZ 1"=20' VERT 1"=4'

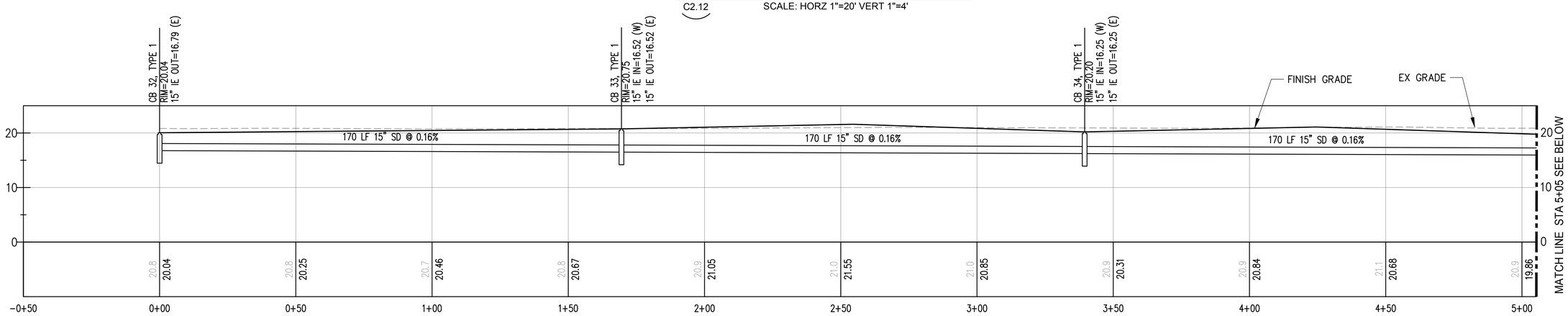

2 C2.12 SD LINE E

SCALE: HORZ 1"=20' VERT 1"=4'

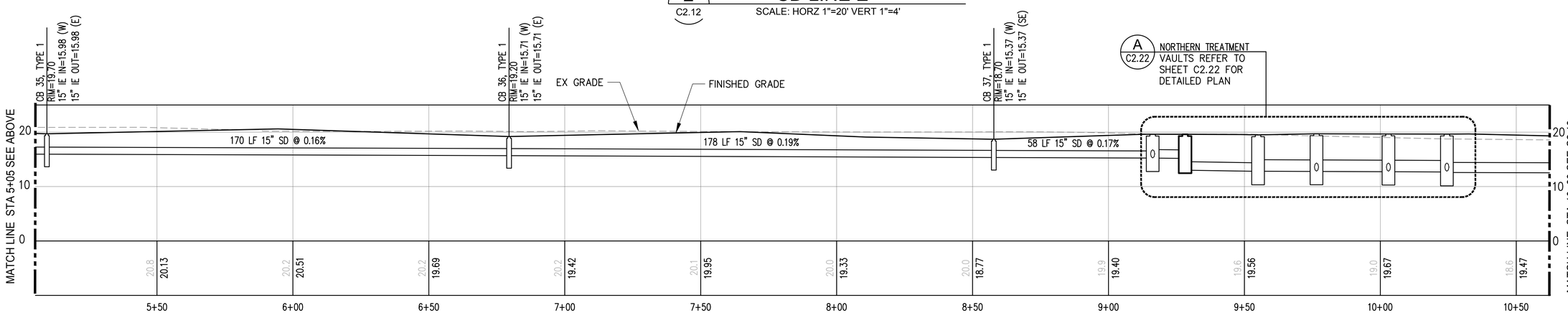

3 C2.12 SD LINE E

SCALE: HORZ 1"=20' VERT 1"=4'

GENERAL NOTES

1. ELEVATIONS SHOWN ARE IN NAVD88 VERTICAL DATUM.

0 20 40 60

SCALE IN FEET

Port of Tacoma
P.O. BOX 1837 TACOMA, WA 98401 (253)383-5841

kpff
2407 North 31st Street, Suite 100
Tacoma, WA 98407-3200
(253) 396-0150 Fax (253) 396-0162

MARK:	REVISION:	BY:	APPR:	DATE:

CANADA KING CONSTANTINE GREY
STATE OF WASHINGTON
32791
REGISTERED PROFESSIONAL ENGINEER
5/9/18

APPROVED:

CMB	5/7/2018	
CHECKED BY	DATE	
SWK	5/9/2018	
DIRECTOR ENG.	DATE	PROJ. ENGR DATE

PRINTED BY: cbennett May 10, 2018
PORT ADDRESS: ONE SITCUM PLAZA TACOMA WA, 98401-1837

PARCEL 77 AUTO IMPORT TERMINAL

STORM DRAINAGE PROFILES

TOWNSHIP: 21N	RANGE: 3E	SECTION: 36	
DAT-HRZ: W83-SF	VERT: PORT OF TACOMA BM#		
PARCEL: MULTIPLE	DRAWING SCALE: AS SHOWN		

C2.12

62 OF 163

CONT/CONS:	070770
M. ID:	201020.01
PHASE:	BID SET

THIS DRAWING IS THE PROPERTY OF THE PORT OF TACOMA AND SHALL NOT BE USED ON OTHER WORK, DISCLOSED, COPIED, IN WHOLE OR IN PART, WITHOUT WRITTEN PERMISSION

PORT OF TACOMA FILE: N:\2017\1700082 Automobile Import Terminal Planning\Part 3 - KPFF Design\3.13 Drawings\Current\30pc Design\C2.9-C2.20 STORM DRAINAGE PROFILES

BINDING EDGE

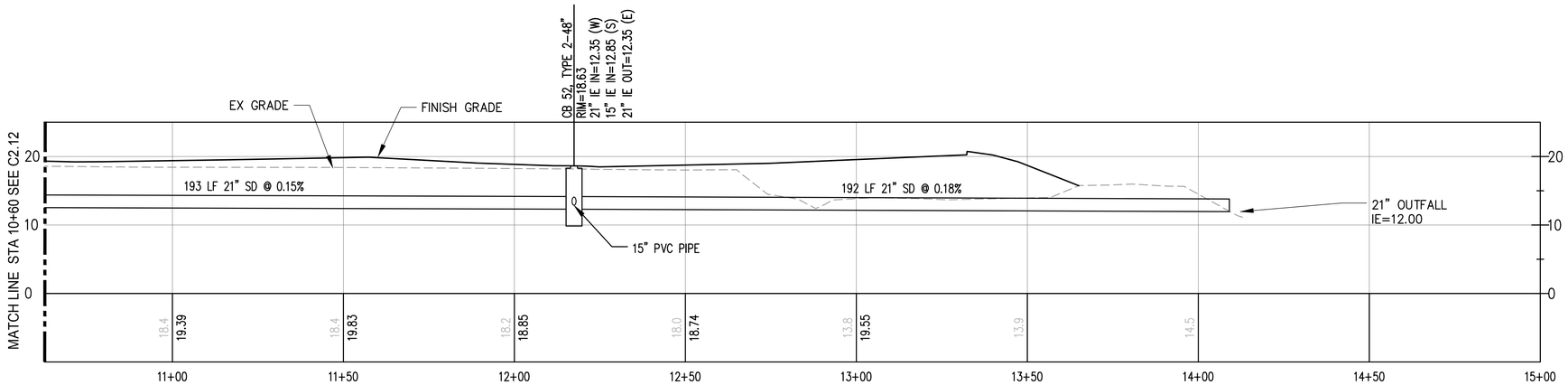

1 C2.13 SD LINE E

SCALE: HORZ 1"=20' VERT 1"=4'

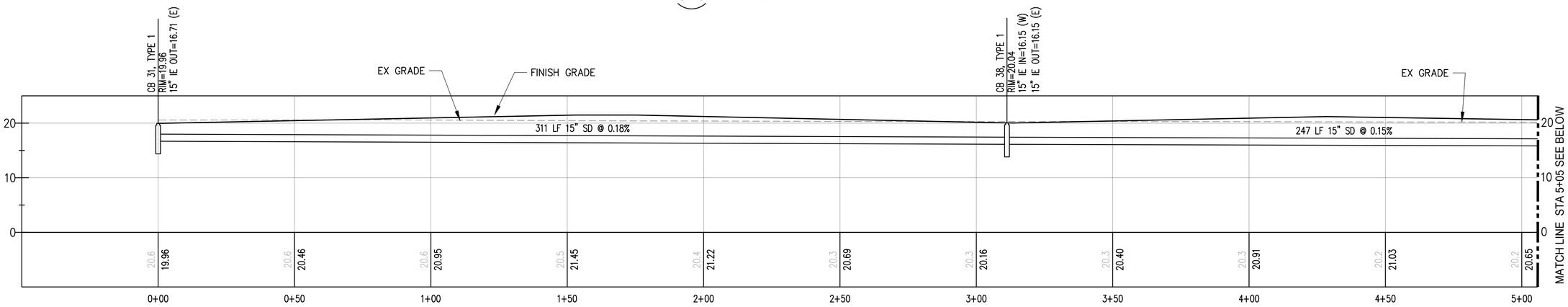

2 C2.13 SD LINE F

SCALE: HORZ 1"=20' VERT 1"=4'

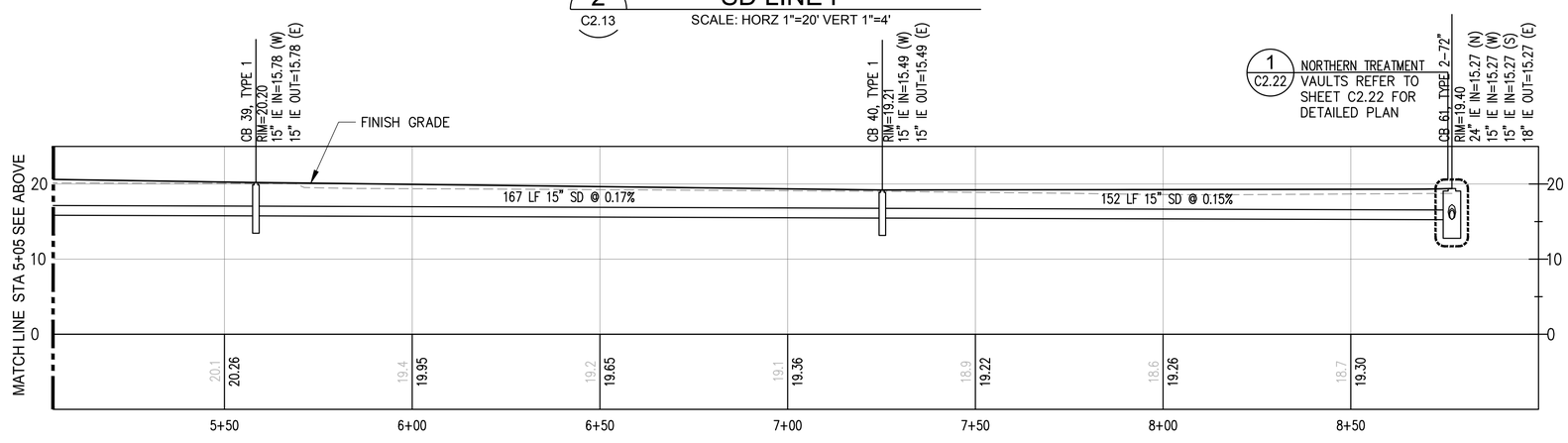

3 C2.13 SD LINE F

SCALE: HORZ 1"=20' VERT 1"=4'

GENERAL NOTES

1. ELEVATIONS SHOWN ARE IN NAVD88 VERTICAL DATUM.

0 20 40 60

SCALE IN FEET

Port of Tacoma
P.O. BOX 1837 TACOMA, WA 98401 (253)383-5841

kpff
2407 North 31st Street, Suite 100
Tacoma, Washington 98407
(253) 396-0150 Fax (253) 396-0162

MARK:	REVISION:	BY:	APPR:	DATE:

STATE OF WASHINGTON
NADEEM KINGSLEY
32791
REGISTERED PROFESSIONAL ENGINEER
5/9/2018

APPROVED:

CMB	5/7/2018	
CHECKED BY	DATE	
SWK	5/9/2018	
DIRECTOR ENG. DATE	PROJ. ENGR	DATE

PRINTED BY: cbennett May 10, 2018
PORT ADDRESS: ONE SITCUM PLAZA TACOMA WA, 98401-1837

PARCEL 77 AUTO IMPORT TERMINAL

STORM DRAINAGE PROFILES

TOWNSHIP: 21N	RANGE: 3E	SECTION: 36	
DAT-HRZ: W83-SF	VERT: PORT OF TACOMA BM#		
PARCEL: MULTIPLE	DRAWING SCALE: AS SHOWN		

C2.13

63 OF 163

CONT/CONS:	070770
M. ID:	201020.01
PHASE:	BID SET

THIS DRAWING IS THE PROPERTY OF THE PORT OF TACOMA AND SHALL NOT BE USED ON OTHER WORK, DISCLOSED, COPIED, IN WHOLE OR IN PART, WITHOUT WRITTEN PERMISSION

PORT OF TACOMA FILE: N:\2017\1700082 Automobile Import Terminal Planning\Part 3 - KPFF Design\3.13 Drawings\Current\30pc Design\C2.9-C2.20 STORM DRAINAGE PROFILES

BINDING EDGE

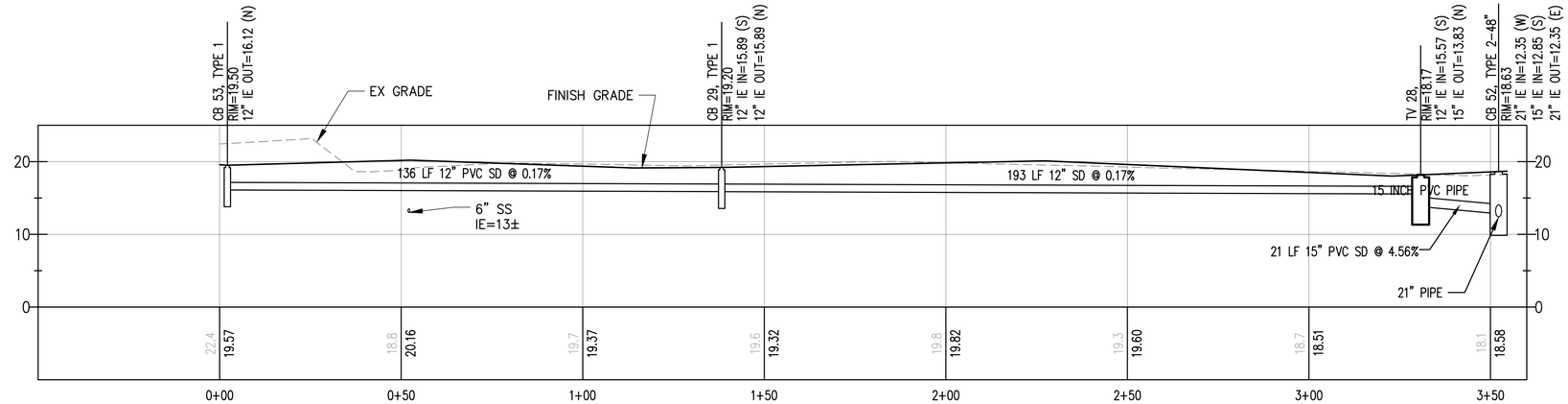

1 C2.14 SD LINE G

SCALE: HORZ 1"=20' VERT 1"=4'

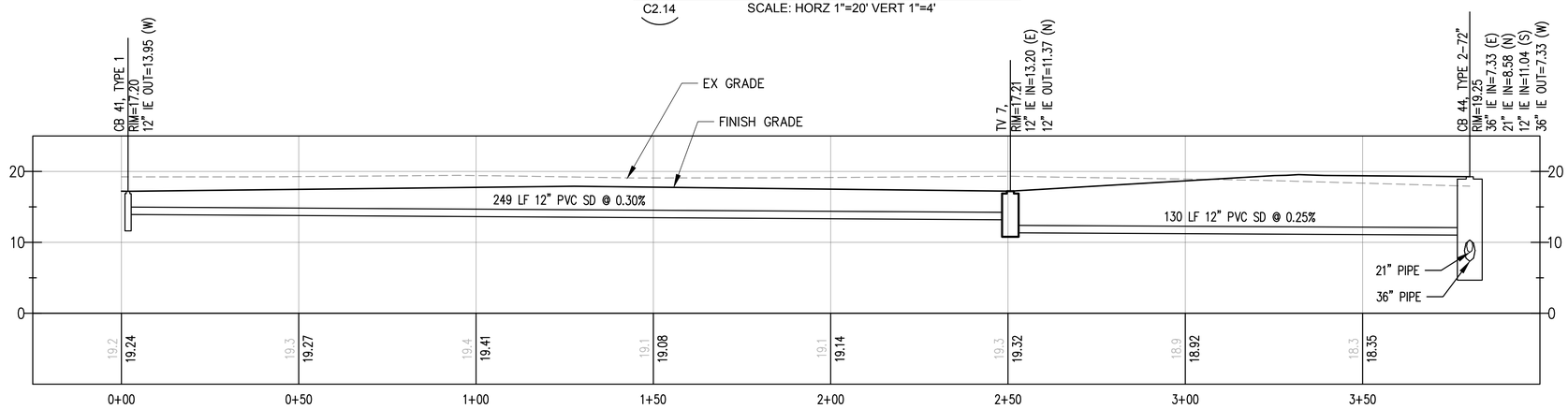

2 C2.14 SD LINE H

SCALE: HORZ 1"=20' VERT 1"=4'

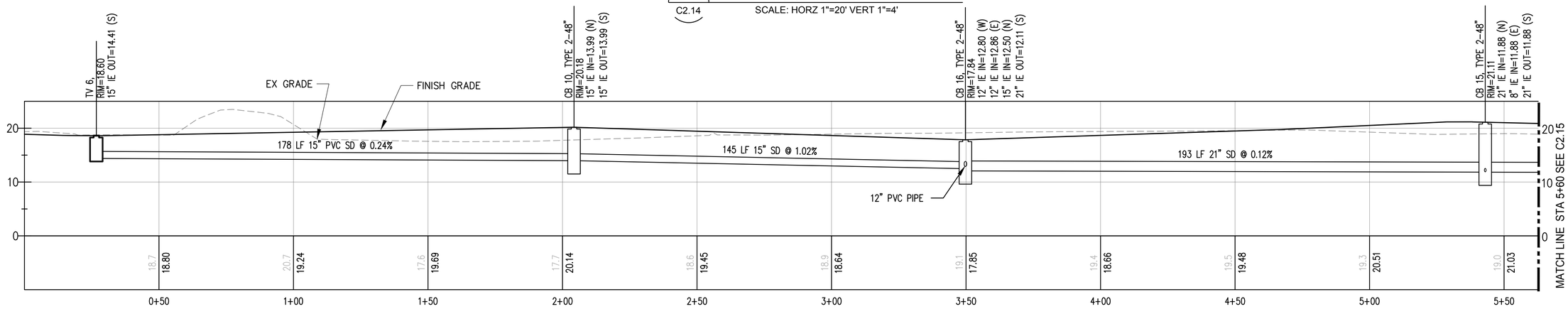

3 C2.14 SD LINE I

SCALE: HORZ 1"=20' VERT 1"=4'

GENERAL NOTES

1. ELEVATIONS SHOWN ARE IN NAVD88 VERTICAL DATUM.

0 20 40 60

SCALE IN FEET

Port of Tacoma
P.O. BOX 1837 TACOMA, WA 98401 (253)383-5841

kpff
2407 North 31st Street, Suite 100
Tacoma, WA 98407
(253) 396-0150 Fax (253) 396-0162

MARK:	REVISION:	BY:	APPR:	DATE:

NATHANIEL KINGSLEY WEBER
STATE OF WASHINGTON
32791
REGISTERED PROFESSIONAL ENGINEER

APPROVED:	CMB	5/7/2018
	CHECKED BY	DATE
	SWK	5/9/2018
DIRECTOR ENG. DATE	PROJ. ENGR	DATE
PRINTED BY: cbennett May 10, 2018		
PORT ADDRESS: ONE SITCUM PLAZA TACOMA WA, 98401-1837		

PARCEL 77 AUTO IMPORT TERMINAL

STORM DRAINAGE PROFILES

TOWNSHIP: 21N	RANGE: 3E	SECTION: 36	
DAT-HRZ: W83-SF	VERT: PORT OF TACOMA BM#		
PARCEL: MULTIPLE	DRAWING SCALE: AS SHOWN		

C2.14

64 OF 163

CONT/CONS: 070770	
M. ID: 201020.01	
PHASE: BID SET	

THIS DRAWING IS THE PROPERTY OF THE PORT OF TACOMA AND SHALL NOT BE USED ON OTHER WORK, DISCLOSED, COPIED, IN WHOLE OR IN PART, WITHOUT WRITTEN PERMISSION

PORT OF TACOMA FILE: N:\2017\1700082 Automobile Import Terminal Planning\Part 3 - KPFF Design\3.13 Drawings\Current\30pc Design\C2.9-C2.20 STORM DRAINAGE PROFILES

BINDING EDGE

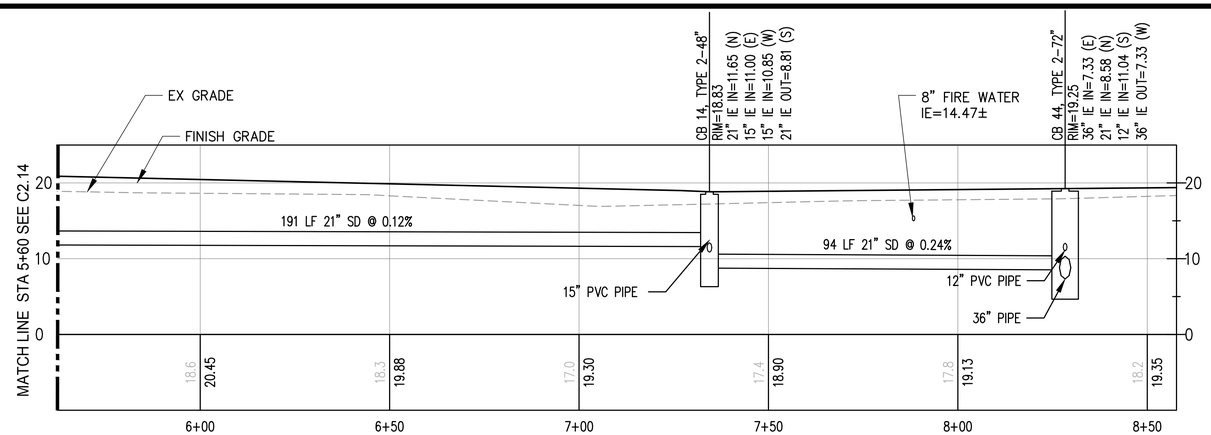

1 C2.15 SD LINE I

SCALE: HORZ 1"=20' VERT 1"=4'

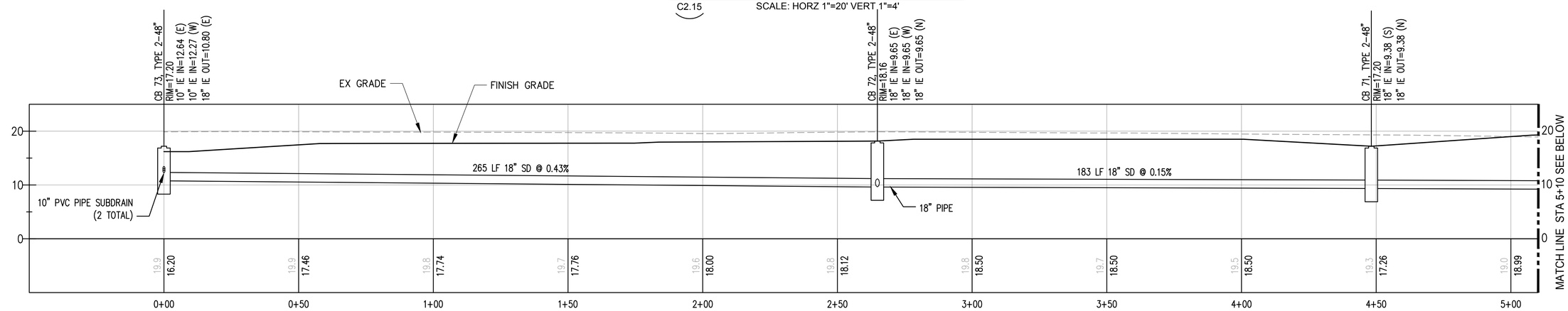

2 C2.15 SD LINE J

SCALE: HORZ 1"=20' VERT 1"=4'

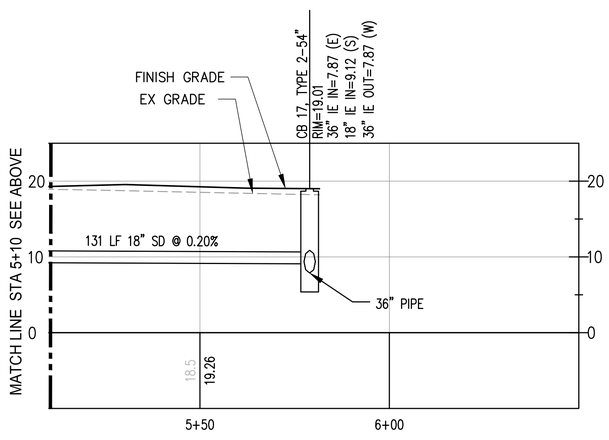

3 C2.15 SD LINE J

SCALE: HORZ 1"=20' VERT 1"=4'

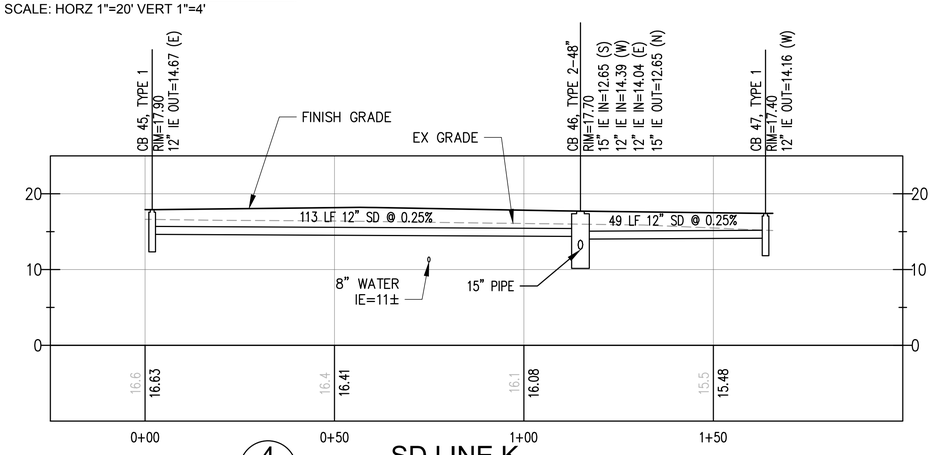

4 C2.15 SD LINE K

SCALE: HORZ 1"=20' VERT 1"=4'

GENERAL NOTES

1. ELEVATIONS SHOWN ARE IN NAVD88 VERTICAL DATUM.

0 20 40 60
SCALE IN FEET

Port of Tacoma
P.O. BOX 1837 TACOMA, WA 98401 (253)383-5841

kpff
2407 North 31st Street, Suite 100
Tacoma, Washington 98407
(253) 396-0150 Fax (253) 396-0162

MARK:	REVISION:	BY:	APPR:	DATE:

CMB 5/7/2018
CHECKED BY DATE
SWK 5/9/2018
PROJ. ENGR DATE
DIRECTOR ENG. DATE
PRINTED BY: cbennett May 10, 2018
PORT ADDRESS: ONE SITCUM PLAZA TACOMA WA, 98401-1837

APPROVED:

PARCEL 77 AUTO IMPORT TERMINAL

STORM DRAINAGE PROFILES

TOWNSHIP: 21N RANGE: 3E SECTION: 36
DAT-HRZ: W83-SF VERT: PORT OF TACOMA BM#
PARCEL: MULTIPLE DRAWING SCALE: AS SHOWN

C2.15

65 OF 163

CONT/CONS: 070770
M. ID: 201020.01
PHASE: BID SET

THIS DRAWING IS THE PROPERTY OF THE PORT OF TACOMA AND SHALL NOT BE USED ON OTHER WORK, DISCLOSED, COPIED, IN WHOLE OR IN PART, WITHOUT WRITTEN PERMISSION

PORT OF TACOMA FILE: N:\2017\1700082 Automobile Import Terminal Planning\Part 3 - KPFF Design\3.13 Drawings\Current\30pc Design\C2.9-C2.20 STORM DRAINAGE PROFILES

BINDING EDGE

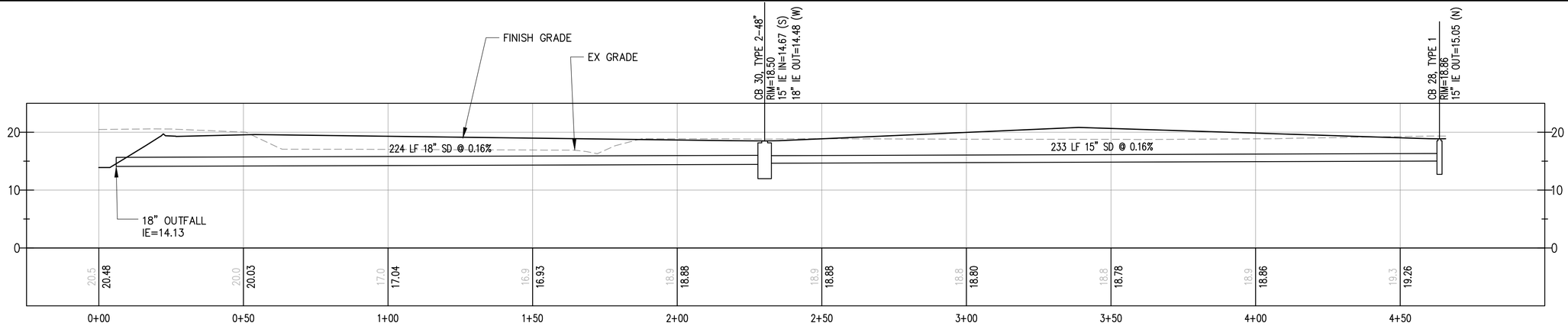

1 C2.16 **SD LINE L**

SCALE: HORZ 1"=20' VERT 1"=4'

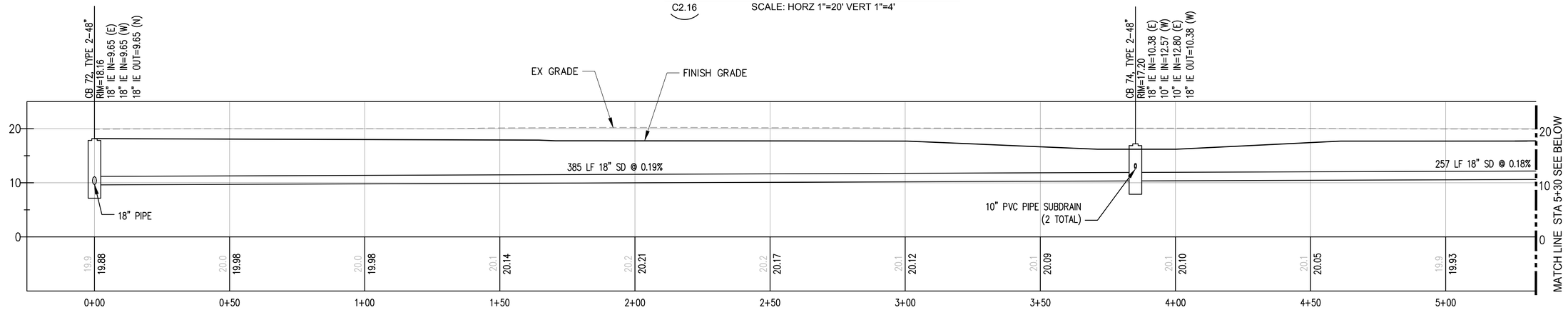

2 C2.16 **SD LINE M**

SCALE: HORZ 1"=20' VERT 1"=4'

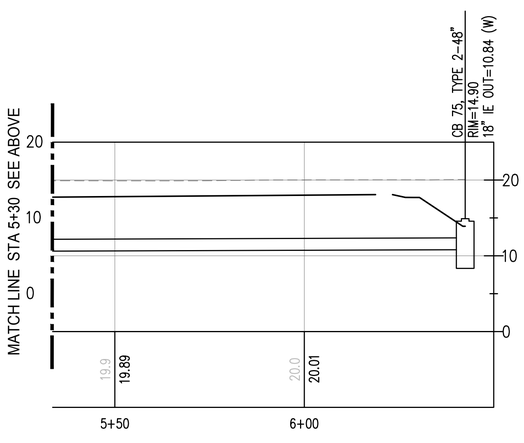

3 C2.16 **SD LINE M**

SCALE: HORZ 1"=20' VERT 1"=4'

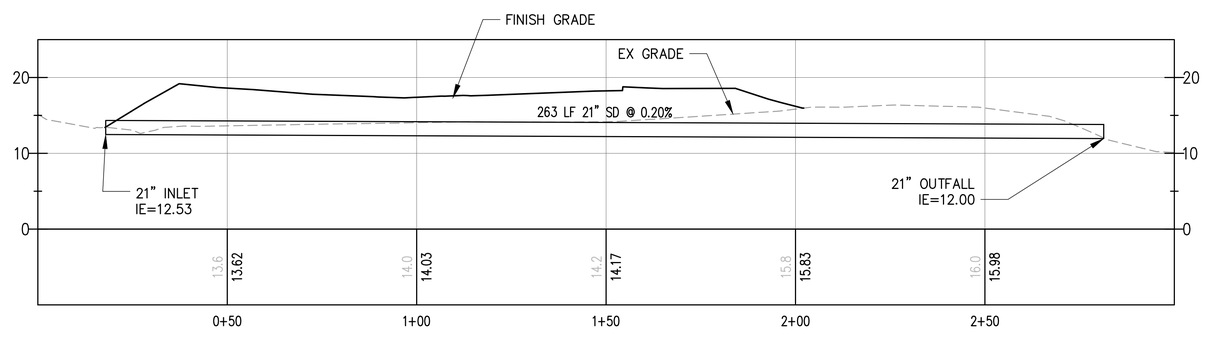

4 C2.16 **SD LINE N**

SCALE: HORZ 1"=20' VERT 1"=4'

GENERAL NOTES

1. ELEVATIONS SHOWN ARE IN NAVD88 VERTICAL DATUM.

0 20 40 60
SCALE IN FEET

Port of Tacoma
P.O. BOX 1837 TACOMA, WA 98401 (253)383-5841

kpff
2407 North 31st Street, Suite 100
Tacoma, Washington 98407
(253) 396-0150 Fax (253) 396-0162

MARK:	REVISION:	BY:	APPR:	DATE:

STATE OF WASHINGTON
CHANDLER KINGSLEY WEY
32791
REGISTERED PROFESSIONAL ENGINEER
5/9/2018

APPROVED:

CMB	5/7/2018	
CHECKED BY	DATE	
SWK	5/9/2018	
DIRECTOR ENG.	DATE	PROJ. ENGR DATE

PRINTED BY: cbennett May 10, 2018
PORT ADDRESS: ONE SITCUM PLAZA TACOMA WA, 98401-1837

PARCEL 77 AUTO IMPORT TERMINAL

STORM DRAINAGE PROFILES

TOWNSHIP: 21N	RANGE: 3E	SECTION: 36	
DAT-HRZ: W83-SF	VERT: PORT OF TACOMA BM#		
PARCEL: MULTIPLE	DRAWING SCALE: AS SHOWN		

C2.16

66 OF 163

CONT/CONS:	070770
M. ID:	201020.01
PHASE:	BID SET

THIS DRAWING IS THE PROPERTY OF THE PORT OF TACOMA AND SHALL NOT BE USED ON OTHER WORK, DISCLOSED, COPIED, IN WHOLE OR IN PART, WITHOUT WRITTEN PERMISSION

PORT OF TACOMA FILE: N:\2017\1700082 Automobile Import Terminal Planning\Part 3 - KPFF Design\3.13 Drawings\Current\30pc Design\C2.9-C2.20 STORM DRAINAGE PROFILES
BINDING EDGE

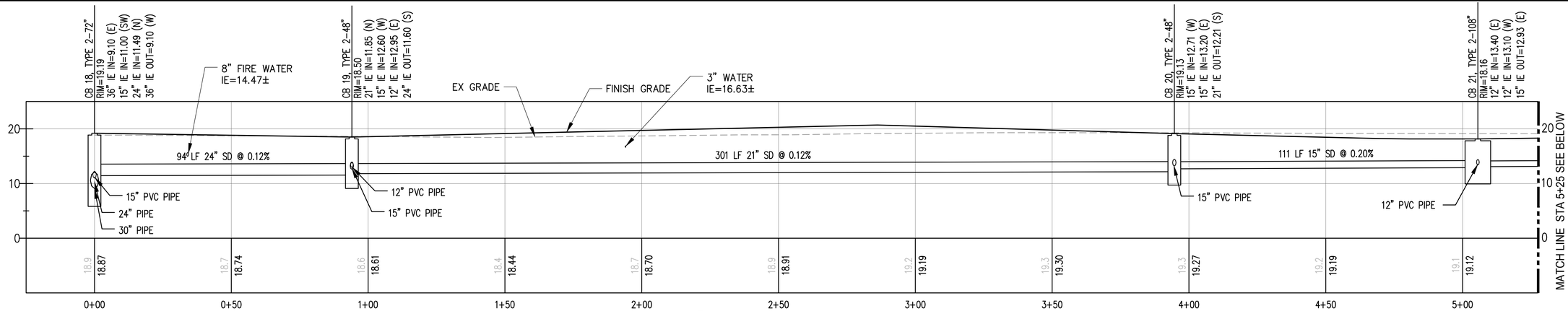

1 C2.17 SD LINE O

SCALE: HORZ 1"=20' VERT 1"=4'

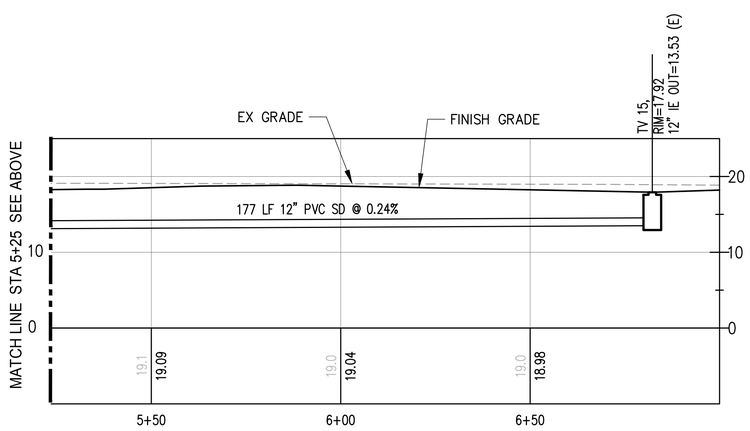

2 C2.17 SD LINE O

SCALE: HORZ 1"=20' VERT 1"=4'

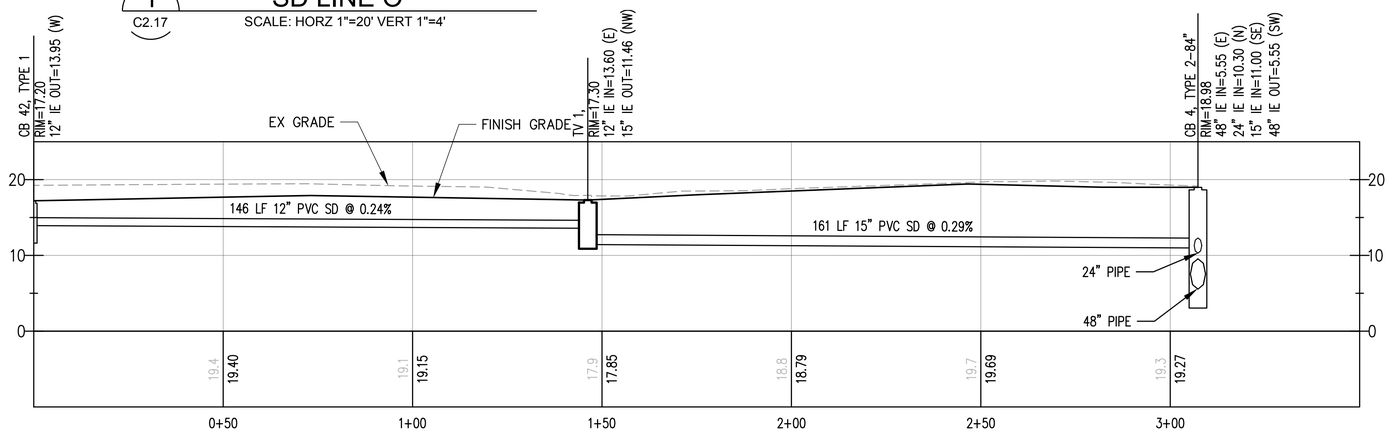

3 C2.17 SD LINE P

SCALE: HORZ 1"=20' VERT 1"=4'

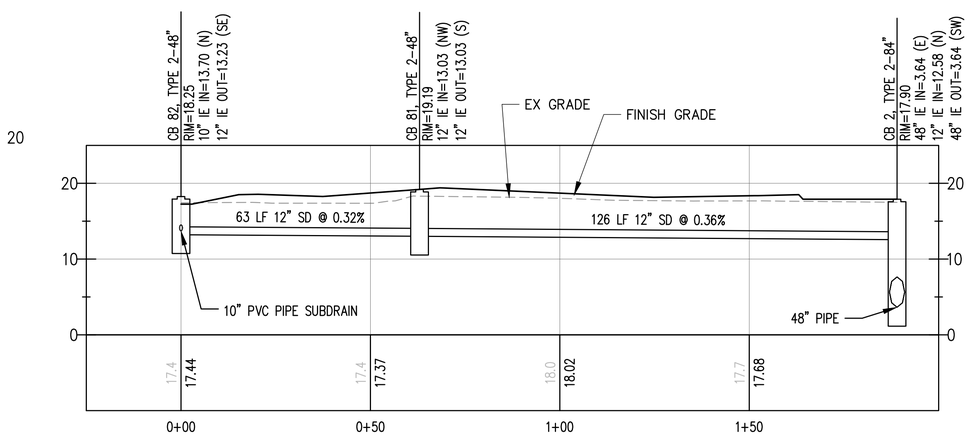

4 C2.17 SD LINE Q

SCALE: HORZ 1"=20' VERT 1"=4'

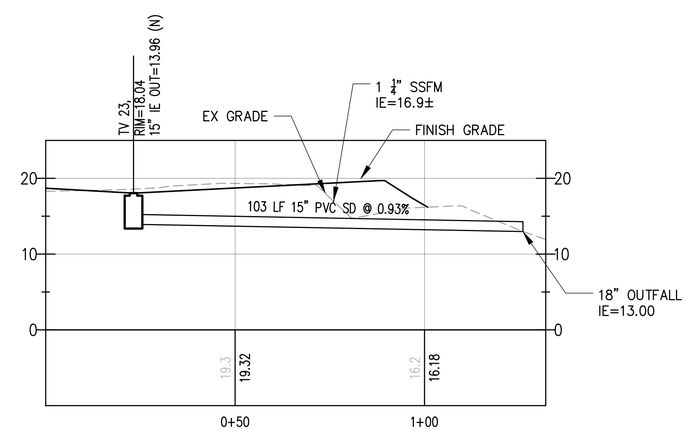

5 C2.17 SD LINE R

SCALE: HORZ 1"=20' VERT 1"=4'

GENERAL NOTES

1. ELEVATIONS SHOWN ARE IN NAVD88 VERTICAL DATUM.

0 20 40 60

SCALE IN FEET

Port of Tacoma
P.O. BOX 1837 TACOMA, WA 98401 (253)383-5841

kpff
2407 North 31st Street, Suite 100
Tacoma, Washington 98407
(253) 396-0150 Fax (253) 396-0162

MARK:	REVISION:	BY:	APPR:	DATE:

APPROVED:

CMB	CHECKED BY	5/7/2018 DATE
SWK	PROJ. ENGR	5/9/2018 DATE
DIRECTOR ENG. DATE	PRINTED BY: cbennett May 10, 2018	
	PORT ADDRESS: ONE SITCUM PLAZA TACOMA WA, 98401-1837	

PARCEL 77 AUTO IMPORT TERMINAL

STORM DRAINAGE PROFILES

TOWNSHIP: 21N	RANGE: 3E	SECTION: 36	
DAT-HRZ: W83-SF	VERT: PORT OF TACOMA BM#		
PARCEL: MULTIPLE	DRAWING SCALE: AS SHOWN		

C2.17

67 OF 163

CONT/CONS:	070770
M. ID:	201020.01
PHASE:	BID SET

THIS DRAWING IS THE PROPERTY OF THE PORT OF TACOMA AND SHALL NOT BE USED ON OTHER WORK, DISCLOSED, COPIED, IN WHOLE OR IN PART, WITHOUT WRITTEN PERMISSION

PORT OF TACOMA FILE: N:\2017\1700082 Automobile Import Terminal Planning\Part 3 - KPFF Design\3.13 Drawings\Current\30pc Design\C2.9-C2.20 STORM DRAINAGE PROFILES

BINDING EDGE

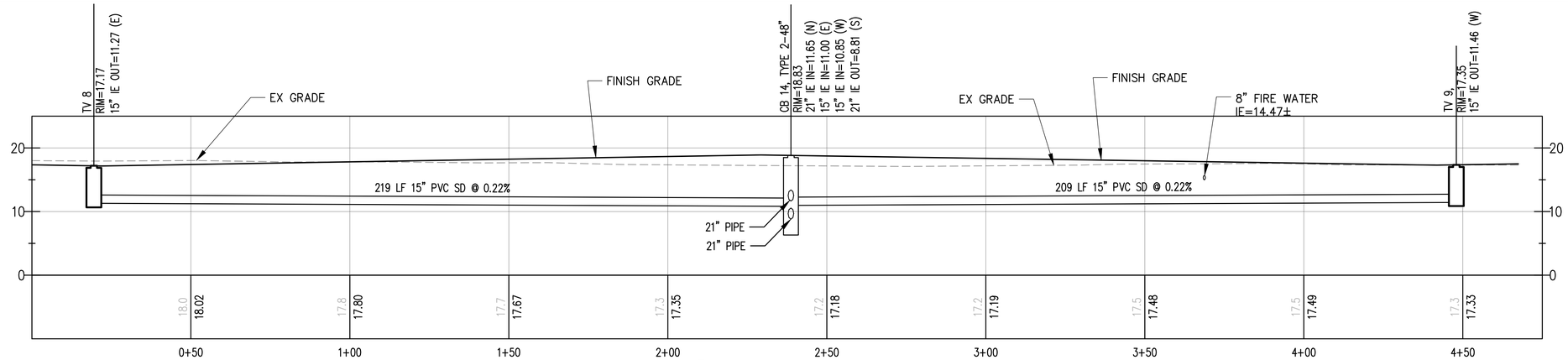

1 C2.18 SD LINE
SCALE: HORZ 1"=20' VERT 1"=4'

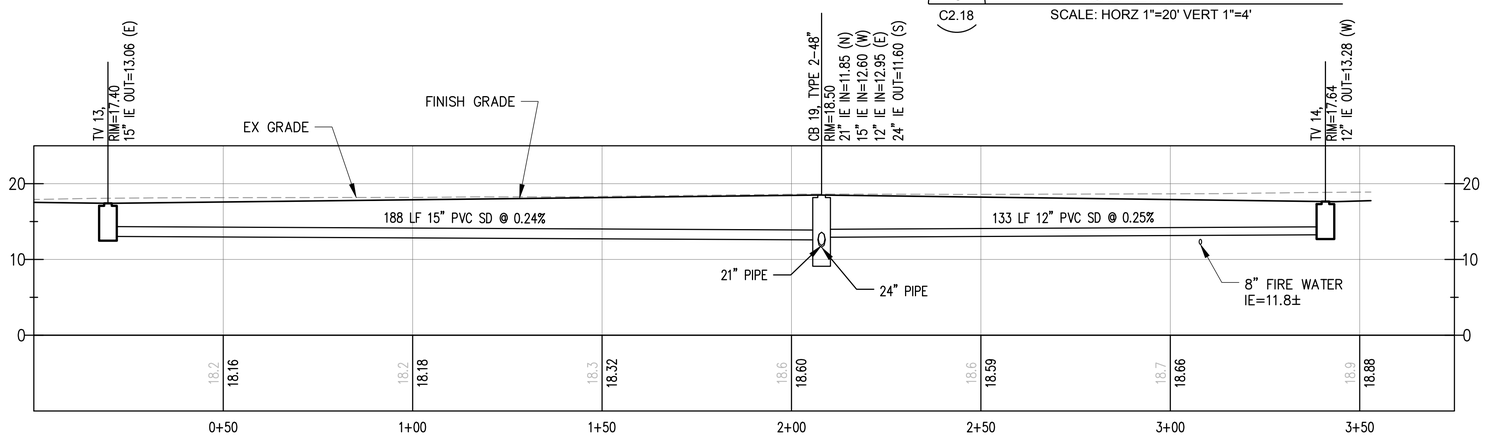

2 C2.18 SD LINE
SCALE: HORZ 1"=20' VERT 1"=4'

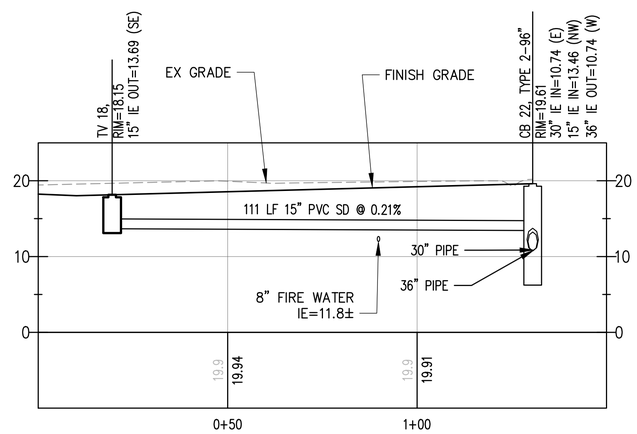

3 C2.18 SD LINE
SCALE: HORZ 1"=20' VERT 1"=4'

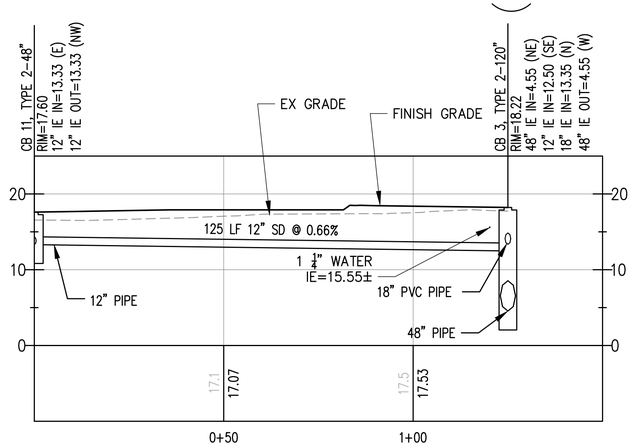

4 C2.18 SD LINE
SCALE: HORZ 1"=20' VERT 1"=4'

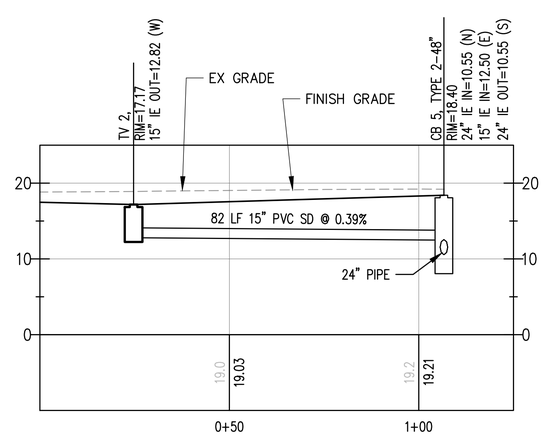

5 C2.18 SD LINE
SCALE: HORZ 1"=20' VERT 1"=4'

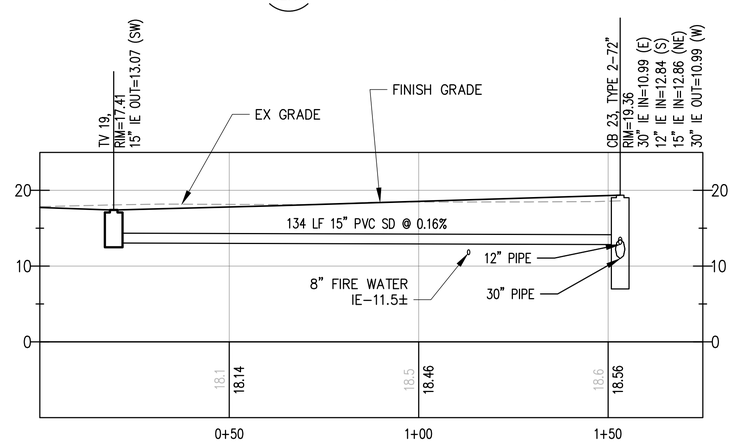

6 C2.18 SD LINE
SCALE: HORZ 1"=20' VERT 1"=4'

0 20 40 60
SCALE IN FEET

GENERAL NOTES

1. ELEVATIONS SHOWN ARE IN NAVD88 VERTICAL DATUM.

Port of Tacoma
P.O. BOX 1837 TACOMA, WA 98401 (253)383-5841

kpff
2407 North 31st Street, Suite 100
Tacoma, Washington 98407
(253) 396-0150 Fax (253) 396-0162

MARK:	REVISION:	BY:	APPR:	DATE:

APPROVED:

CMB	5/7/2018	
CHECKED BY	DATE	
SWK	5/9/2018	
DIRECTOR ENG. DATE	PROJ. ENGR	DATE

PRINTED BY: cbennett May 10, 2018
PORT ADDRESS: ONE SITCUM PLAZA TACOMA WA 98401-1837

PARCEL 77 AUTO IMPORT TERMINAL

STORM DRAINAGE PROFILES

TOWNSHIP: 21N	RANGE: 3E	SECTION: 36	
DAT-HRZ: W83-SF	VERT: PORT OF TACOMA BM#		
PARCEL: MULTIPLE	DRAWING SCALE: AS SHOWN		

C2.18

68 OF 163

CONT/CONS:	070770
M. ID:	201020.01
PHASE:	BID SET

THIS DRAWING IS THE PROPERTY OF THE PORT OF TACOMA AND SHALL NOT BE USED ON OTHER WORK, DISCLOSED, COPIED, IN WHOLE OR IN PART, WITHOUT WRITTEN PERMISSION

PORT OF TACOMA FILE: N:\2017\1700082 Automobile Import Terminal Planning\Part 3 - KPFF Design\3.13 Drawings\Current\30pc Design\C2.9-C2.20 STORM DRAINAGE PROFILES
BINDING EDGE

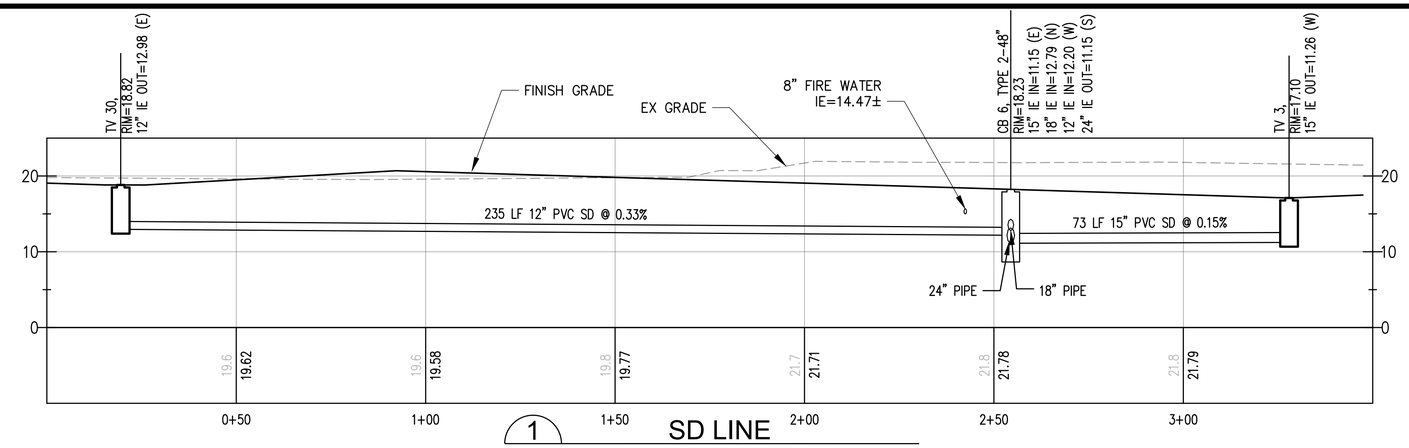

1 C2.19 SD LINE
SCALE: HORZ 1"=20' VERT 1"=4'

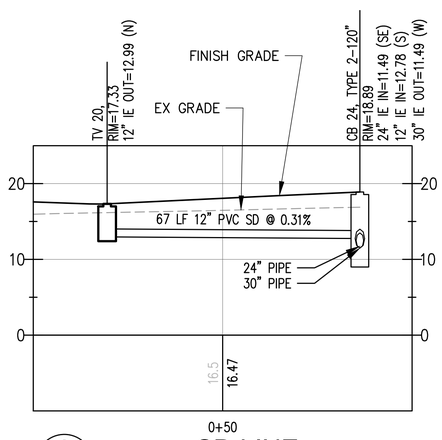

2 C2.19 SD LINE
SCALE: HORZ 1"=20' VERT 1"=4'

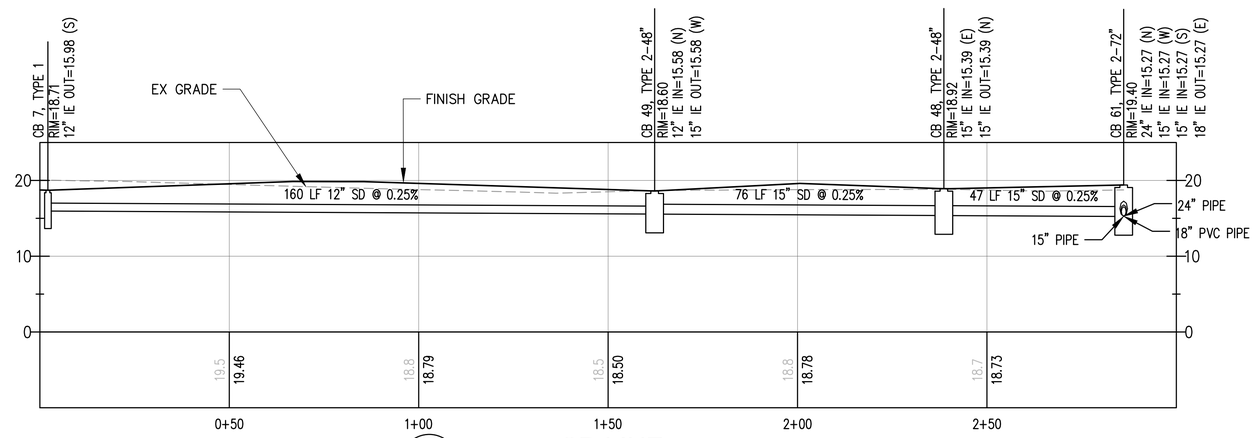

3 C2.19 SD LINE
SCALE: HORZ 1"=20' VERT 1"=4'

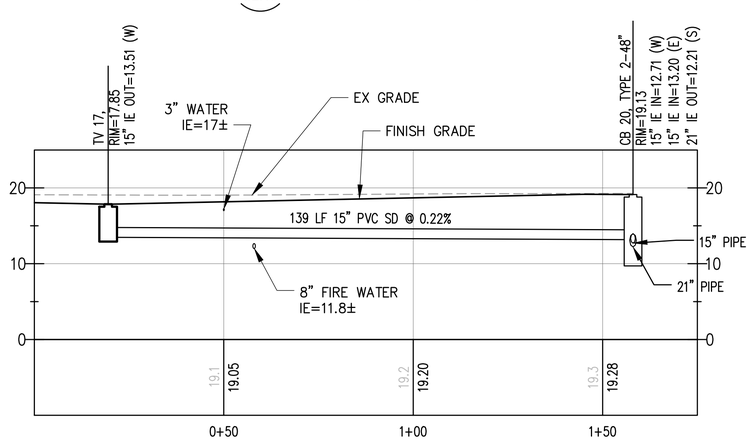

4 C2.19 SD LINE
SCALE: HORZ 1"=20' VERT 1"=4'

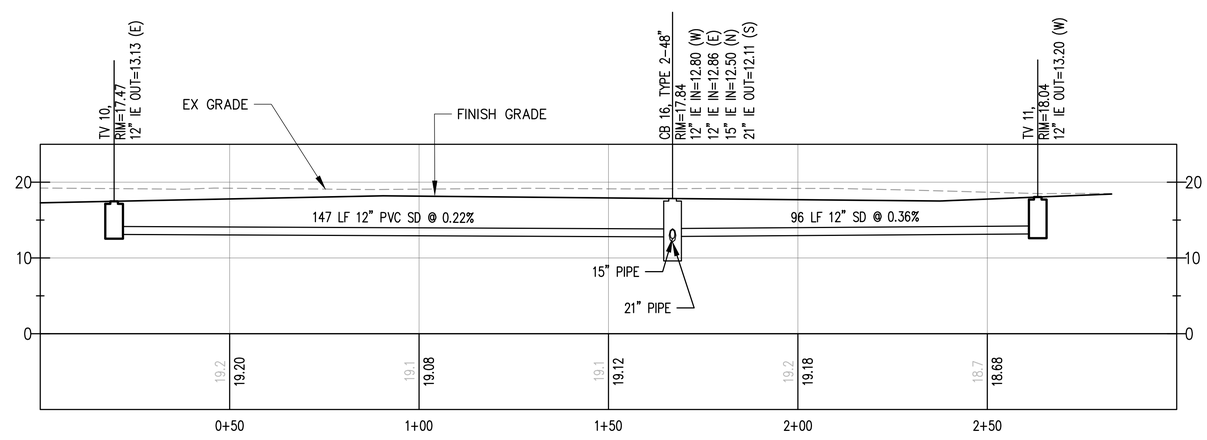

5 C2.19 SD LINE
SCALE: HORZ 1"=20' VERT 1"=4'

GENERAL NOTES

1. ELEVATIONS SHOWN ARE IN NAVD88 VERTICAL DATUM.

0 20 40 60
SCALE IN FEET

Port of Tacoma
P.O. BOX 1837 TACOMA, WA 98401 (253)383-5841

kpff
2407 North 31st Street, Suite 100
Tacoma, Washington 98407
(253) 396-0150 Fax (253) 396-0162

MARK:	REVISION:	BY:	APPR:	DATE:

APPROVED:

CMB	5/7/2018	
CHECKED BY	DATE	
SWK	5/9/2018	
DIRECTOR ENG.	DATE	PROJ. ENGR

PRINTED BY: cbennett May 10, 2018
PORT ADDRESS: ONE SITCUM PLAZA TACOMA WA, 98401-1837

PARCEL 77 AUTO IMPORT TERMINAL

STORM DRAINAGE PROFILES

TOWNSHIP: 21N	RANGE: 3E	SECTION: 36	
DAT-HRZ: W83-SF	VERT: PORT OF TACOMA BM#		
PARCEL: MULTIPLE	DRAWING SCALE: AS SHOWN		

C2.19
69 OF 163

CONT/CONS:	070770
M. ID:	201020.01
PHASE:	BID SET

THIS DRAWING IS THE PROPERTY OF THE PORT OF TACOMA AND SHALL NOT BE USED ON OTHER WORK, DISCLOSED, COPIED, IN WHOLE OR IN PART, WITHOUT WRITTEN PERMISSION

PORT OF TACOMA FILE: N:\2017\1700082 Automobile Import Terminal Planning\Part 3 - KPFF Design\3.13 Drawings\Current\30pc Design\C2.9-C2.20 STORM DRAINAGE PROFILES
BINDING EDGE

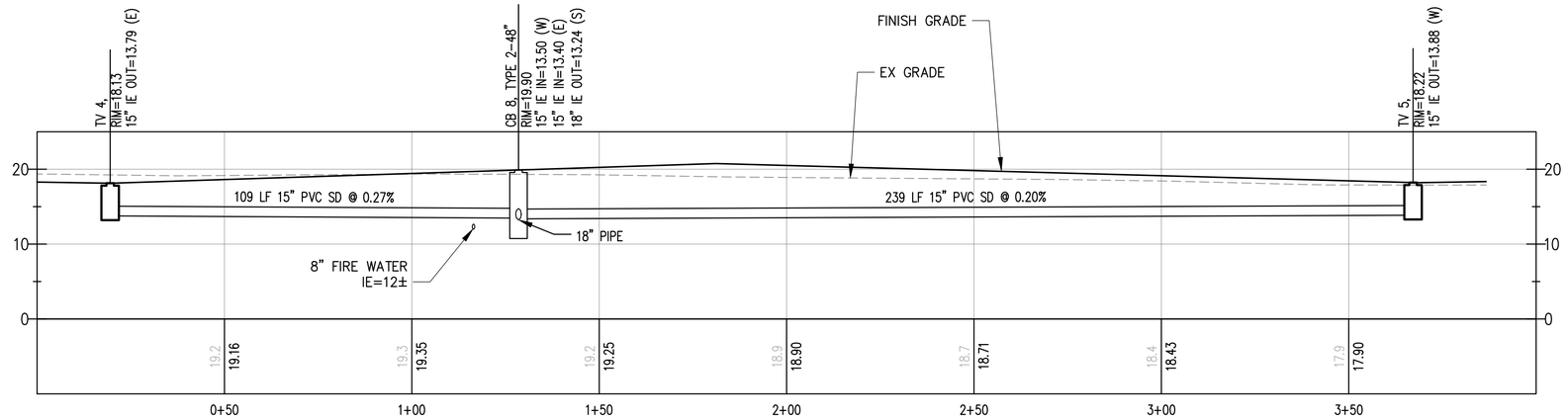

1 C2.20 SD LINE

SCALE: HORZ 1"=20' VERT 1"=4'

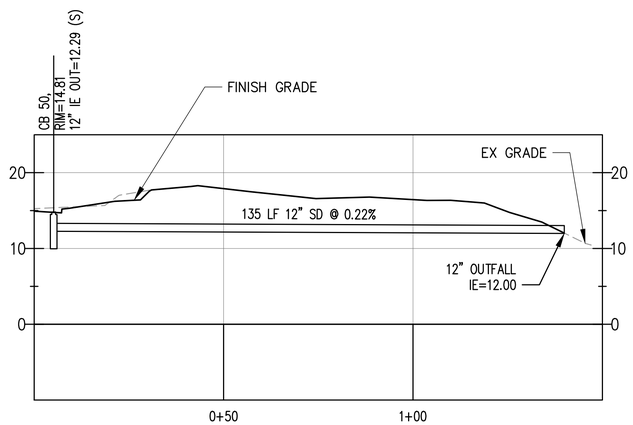

2 C2.20 SD LINE

SCALE: HORZ 1"=20' VERT 1"=4'

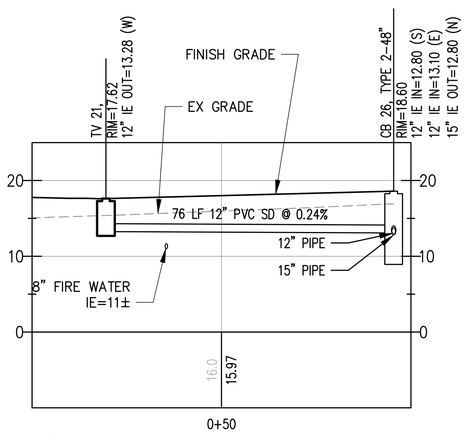

3 C2.20 SD LINE

SCALE: HORZ 1"=20' VERT 1"=4'

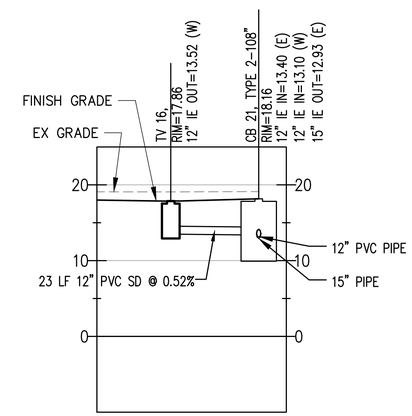

4 C2.20 SD LINE

SCALE: HORZ 1"=20' VERT 1"=4'

GENERAL NOTES

1. ELEVATIONS SHOWN ARE IN NAVD88 VERTICAL DATUM.

0 20 40 60

SCALE IN FEET

Port of Tacoma
P.O. BOX 1837 TACOMA, WA 98401 (253)383-5841

kpff
2407 North 31st Street, Suite 100
Tacoma, Washington 98407
(253) 396-0150 Fax (253) 396-0162

MARK:	REVISION:	BY:	APPR:	DATE:

APPROVED:

	CMB	5/7/2018
	CHECKED BY	DATE
	SWK	5/9/2018
DIRECTOR ENG. DATE	PROJ. ENGR	DATE
PRINTED BY: cbennett May 10, 2018		
PORT ADDRESS: ONE SITCUM PLAZA TACOMA WA, 98401-1837		

PARCEL 77 AUTO IMPORT TERMINAL

STORM DRAINAGE PROFILES

TOWNSHIP: 21N	RANGE: 3E	SECTION: 36	
DAT-HRZ: W83-SF	VERT: PORT OF TACOMA BM#		
PARCEL: MULTIPLE	DRAWING SCALE: AS SHOWN		

C2.20

70 OF 163

CONT/CONS:	070770
M. ID:	201020.01
PHASE:	BID SET

THIS DRAWING IS THE PROPERTY OF THE PORT OF TACOMA AND SHALL NOT BE USED ON OTHER WORK, DISCLOSED, COPIED, IN WHOLE OR IN PART, WITHOUT WRITTEN PERMISSION

PORT OF TACOMA FILE: N:\2017\1700082 Automobile Import Terminal Planning\Part 3 - KPFF Design\3.13 Drawings\Current\30pc Design\C2.9-C2.20 STORM DRAINAGE PROFILES

BINDING EDGE

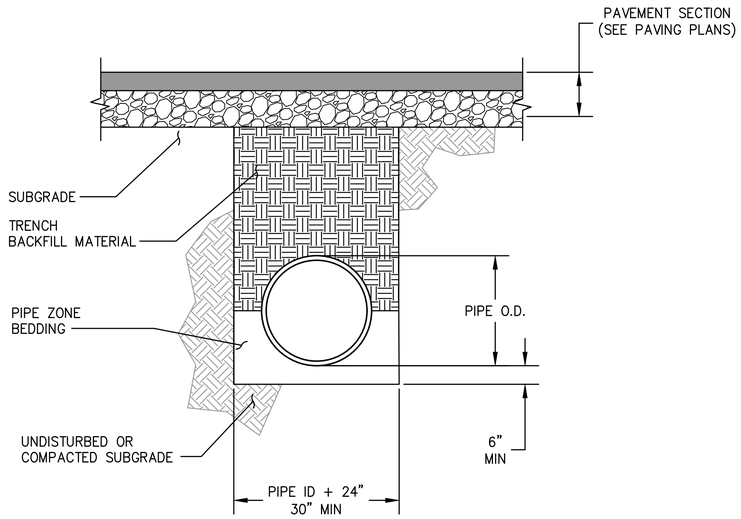

NOTE:

1. CONTRACTOR SHALL PROVIDE DEWATERING SYSTEMS AS REQUIRED DURING PIPE INSTALLATIONS.

1 C2.21 TYPICAL STORM DRAINAGE TRENCH DETAIL

NTS

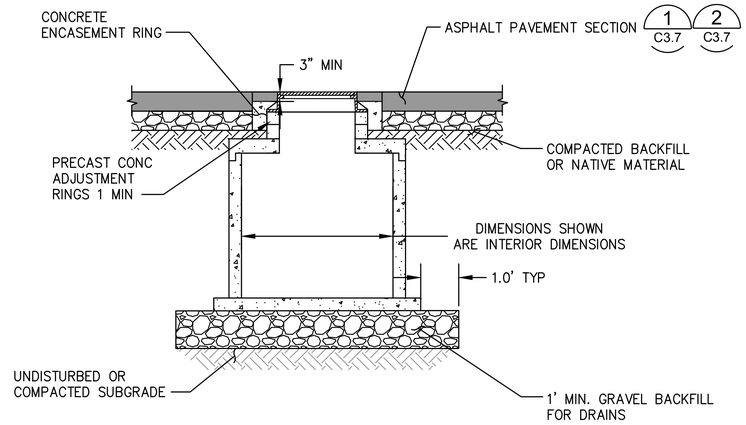

2 C2.21 TYPICAL CATCH BASIN TYPE 2 INSTALLATION DETAIL

NTS

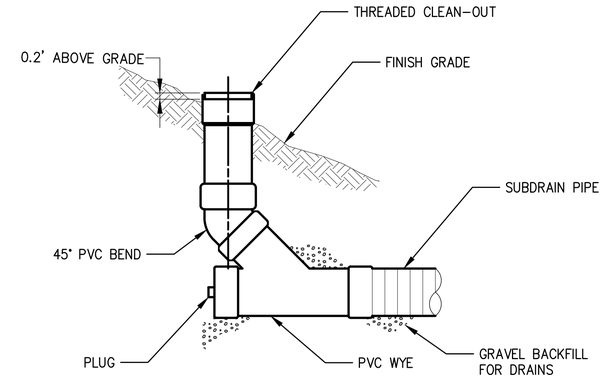

3 C2.21 TYPICAL BIORETENTION AREA CLEANOUT DETAIL

NTS

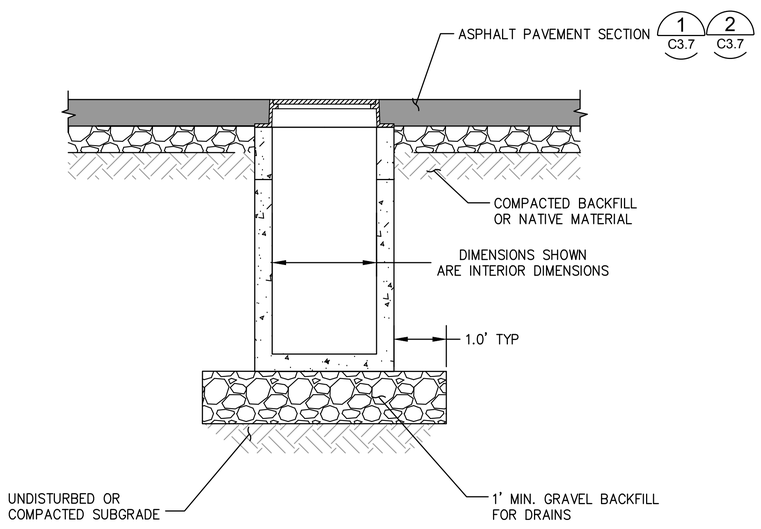

4 C2.21 TYPICAL CATCH BASIN TYPE 1 INSTALLATION DETAIL

NTS

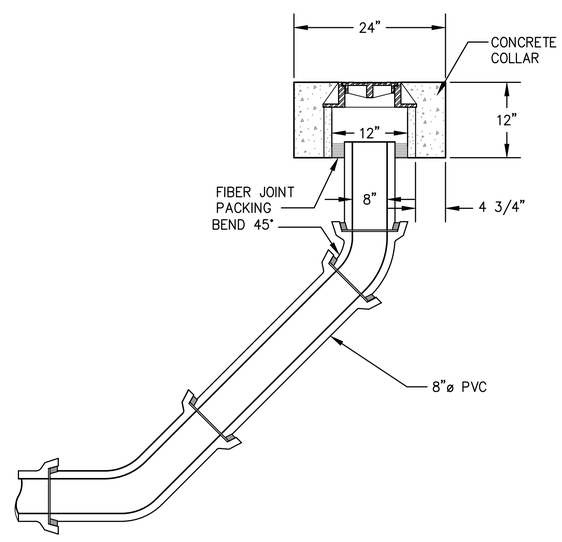

5 C2.21 PAVED OR OPEN BALLAST AREA STORM DRAIN CLEANOUT

NTS

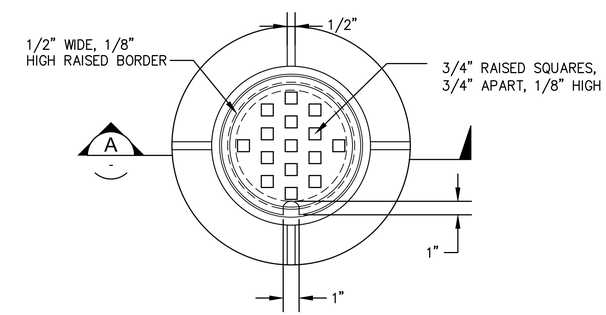

PLAN

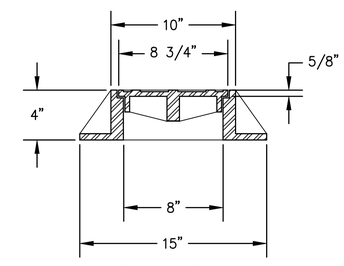

SECTION A

Port of Tacoma
P.O. BOX 1837 TACOMA, WA 98401 (253)383-5841

kpff
2407 North 31st Street, Suite 100
Tacoma, WA 98407
(253) 396-0150 Fax (253) 396-0162

MARK:	REVISION:	BY:	APPR:	DATE:

STATE OF WASHINGTON
CHADE LINCOLN CLEY
32791
REGISTERED PROFESSIONAL ENGINEER
5/9/18

APPROVED:

CMB	5/7/2018		
CHECKED BY	DATE		
SWK	5/9/2018		
DIRECTOR ENG.	DATE	PROJ. ENGR	DATE

PRINTED BY: cbennett May 10, 2018
PORT ADDRESS: ONE SITCUM PLAZA
TACOMA WA, 98401-1837

PARCEL 77 AUTO IMPORT TERMINAL

STORM DRAINAGE DETAILS

TOWNSHIP: 21N	RANGE: 3E	SECTION: 36	
DAT-HRZ: W83-SF	VERT: PORT OF TACOMA BM#		
PARCEL: MULTIPLE	DRAWING SCALE: AS SHOWN		

C2.21

71 OF 163

CONT/CONS:	070770
M. ID:	201020.01
PHASE:	100% SET

THIS DRAWING IS THE PROPERTY OF THE PORT OF TACOMA AND SHALL NOT BE USED ON OTHER WORK, DISCLOSED, COPIED, IN WHOLE OR IN PART, WITHOUT WRITTEN PERMISSION

PORT OF TACOMA FILE: N:\2017\1700082 Automobile Import Terminal Planning\Part 3 - KPFF Design\3.13 Drawings\Current\30pc Design\C2.21 STORM DRAINAGE DETAILS

BINDING EDGE

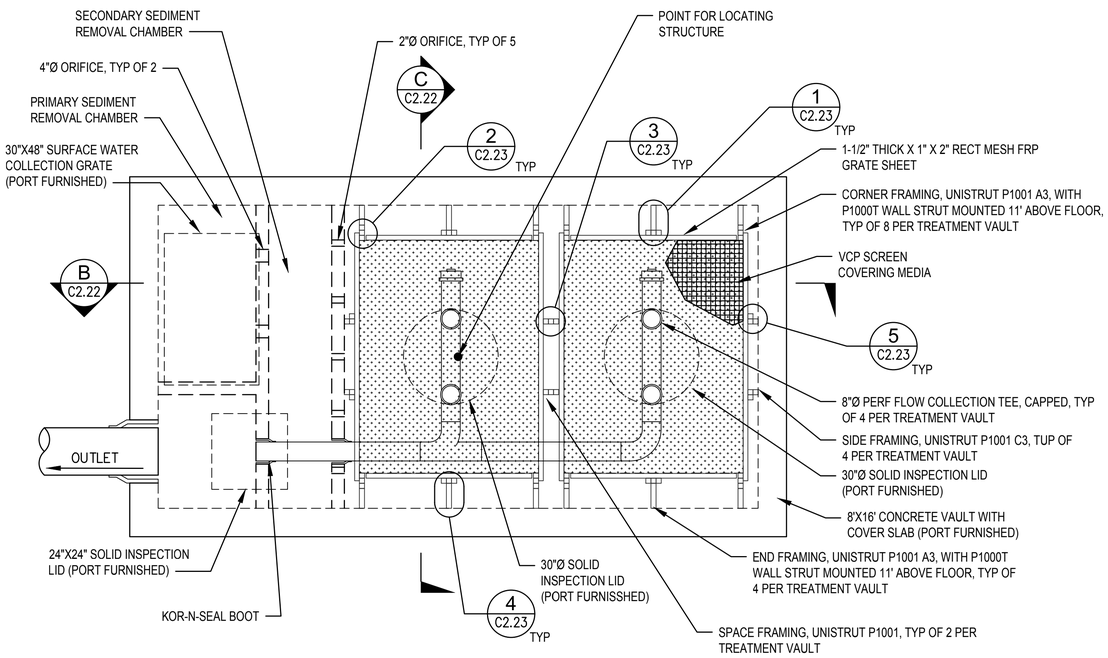

1 C2.22 TREATMENT VAULT, TYPICAL

SCALE: 1" = 2'

NOTE:
1. FOR ANCHORAGE OF UNISTRUT TO CONC FOUNDATION, SEE 6 C2.23

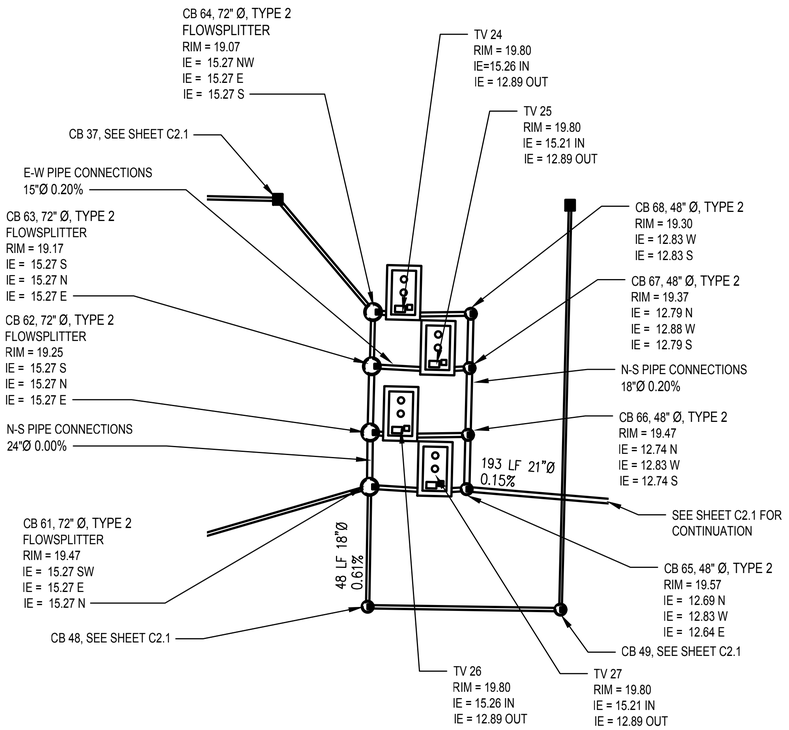

A C2.22 NORTHERN TREATMENT VAULTS

SCALE: 1" = 30'

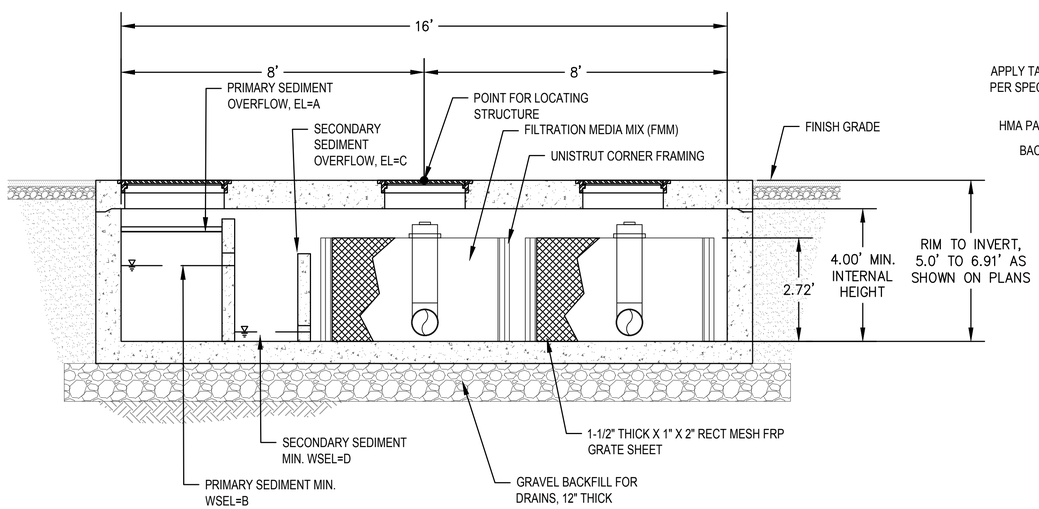

B C2.22 TREATMENT VAULT SECTION

SCALE: 1" = 2'

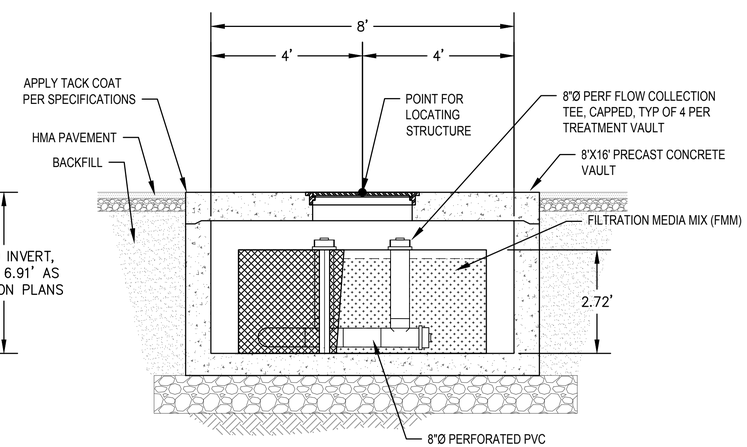

C C2.22 TREATMENT VAULT SECTION

SCALE: 1" = 2'

NOTES

1. CONCRETE VAULT COMPLETE WITH BAFFLE WALLS, INSPECTION LIDS AND COLLECTION GRATE SHALL BE PORT FURNISHED.

TREATMENT VAULT

BASIS OF DESIGN:
FMM CAGE SIDE SURFACE AREA = 112.8 SF
FMM CAGE TOP SURFACE AREA = 73.8 SF
FMM CAGE SURFACE AREA = 186.6 SF
TREATMENT RATE = 1 GPM/SF
VAULT TREATMENT CAPACITY = 186.6 GPM (0.42 CFS)

ELEVATIONS:
A = 43" ABOVE VAULT FLOOR, 37.5" W/ONE 2X2 FLASHBOARD
B = 24" ABOVE VAULT FLOOR
C = 28" ABOVE VAULT FLOOR, 35" W/TWO 2X4 FLASHBAORDS
D = 3" ABOVE VAULT FLOOR
E = 45" ABOVE VAULT FLOOR

Port of Tacoma
P.O. BOX 1837 TACOMA, WA 98401 (253)383-5841

kpff
2407 North 31st Street, Suite 100
Tacoma, WA 98407
(253) 396-0150 Fax (253) 396-0162

MARK:	REVISION:	BY:	APPR:	DATE:

CANADA, KINCSEY, STATE OF WASHINGTON, 32791, REGISTERED PROFESSIONAL ENGINEER

	CMB	5/7/2018
	CHECKED BY	DATE
	SWK	5/9/2018
DIRECTOR ENG. DATE	PROJ. ENGR	DATE
PRINTED BY: cbennett May 10, 2018		
PORT ADDRESS: ONE SITCUM PLAZA TACOMA WA, 98401-1837		

APPROVED:

PARCEL 77 AUTO IMPORT TERMINAL

STORMWATER TREATMENT VAULT DETAILS

TOWNSHIP: 21N	RANGE: 3E	SECTION: 36	
DAT-HRZ: W83-SF	VERT: PORT OF TACOMA BM#		
PARCEL: MULTIPLE	DRAWING SCALE: AS SHOWN		

C2.22

72 OF 163

CONT/CONS:	070770
M. ID:	201020.01
PHASE:	100% SET

THIS DRAWING IS THE PROPERTY OF THE PORT OF TACOMA AND SHALL NOT BE USED ON OTHER WORK, DISCLOSED, COPIED, IN WHOLE OR IN PART, WITHOUT WRITTEN PERMISSION

PORT OF TACOMA FILE: N:\2017\1700082 Automobile Import Terminal Planning\Part 3 - KPFF Design\3.13 Drawings\Current\30pc Design\C2.22 STORMWATER TREATMENT VAULT DETAILS
BINDING EDGE

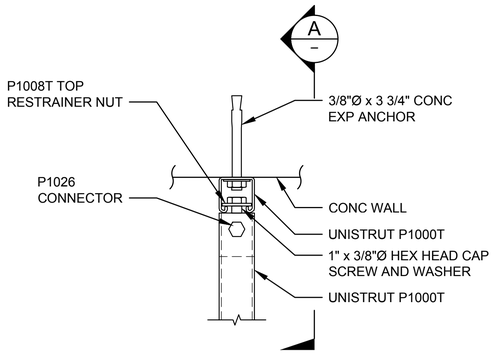

1 C2.23 **DETAIL**
SCALE: NTS

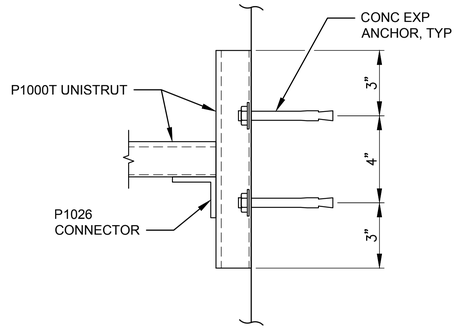

A C2.23 **DETAIL**
SCALE: NTS

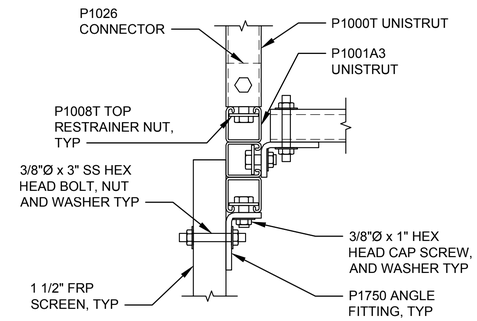

2 C2.23 **DETAIL**
SCALE: NTS

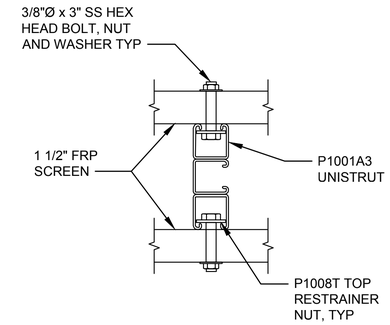

3 C2.23 **DETAIL**
SCALE: NTS

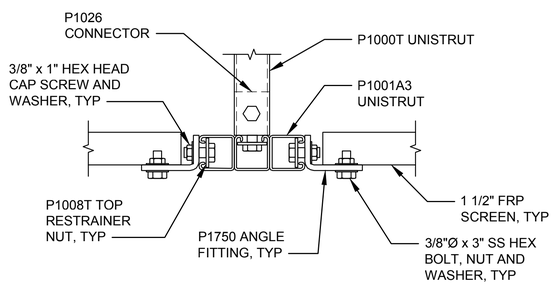

4 C2.23 **DETAIL**
SCALE: NTS

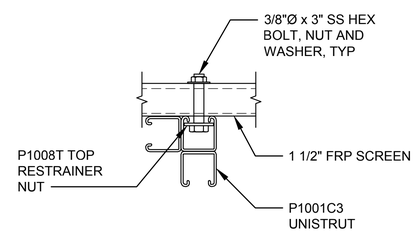

5 C2.23 **DETAIL**
SCALE: NTS

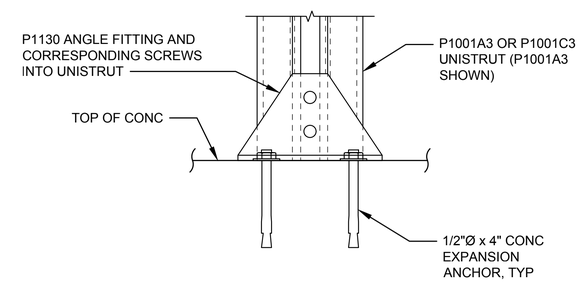

6 C2.23 **DETAIL**
SCALE: NTS

kpff
2407 North 31st Street, Suite 100
Tacoma, WA 98407
(253) 396-0150 Fax (253) 396-0162

Port of Tacoma
P.O. BOX 1837 TACOMA, WA 98401 (253)383-5841

MARK:	REVISION:	BY:	APPR:	DATE:

STATE OF WASHINGTON
CHARLES MICHAEL BLACKLEY
32791
REGISTERED PROFESSIONAL ENGINEER
5/9/2018

APPROVED:

	CMB	5/7/2018
	CHECKED BY	DATE
	SWK	5/9/2018
DIRECTOR ENG. DATE	PROJ. ENGR	DATE

PRINTED BY: cbennett May 10, 2018
PORT ADDRESS: ONE SITCUM PLAZA
TACOMA WA, 98401-1837

PARCEL 77 AUTO IMPORT TERMINAL

STORMWATER TREATMENT VAULT DETAILS

TOWNSHIP: 21N | RANGE: 3E | SECTION: 36
DAT–HRZ: W83-SF | VERT: PORT OF TACOMA BM#
PARCEL: MULTIPLE | DRAWING SCALE: AS SHOWN

C2.23

73 OF 163

CONT/CONS: 070770
M. ID: 201020.01
PHASE: 100% SET

THIS DRAWING IS THE PROPERTY OF THE PORT OF TACOMA AND SHALL NOT BE USED ON OTHER WORK, DISCLOSED, COPIED, IN WHOLE OR IN PART, WITHOUT WRITTEN PERMISSION

PORT OF TACOMA FILE: N:\2017\17000082 Automobile Import Terminal Planning\Part 3 - KPFF Design\3.13 Drawings\Current\30pc Design\C2.23 STORMWATER TREATMENT VAULT DETAILS
BINDING EDGE

STORMFILTER STEEL CATCHBASIN DESIGN NOTES

STORMFILTER TREATMENT CAPACITY IS A FUNCTION OF THE CARTRIDGE SELECTION AND THE NUMBER OF CARTRIDGES. 3 CARTRIDGE CATCHBASIN HAS A MAXIMUM OF THREE CARTRIDGES. SYSTEM IS SHOWN WITH A 27" CARTRIDGE, AND IS ALSO AVAILABLE WITH AN 18" CARTRIDGE. STORMFILTER CATCHBASIN CONFIGURATIONS ARE AVAILABLE WITH A DRY INLET BAY FOR VECTOR CONTROL.
PEAK HYDRAULIC CAPACITY PER TABLE BELOW. IF THE SITE CONDITIONS EXCEED PEAK HYDRAULIC CAPACITY, AN UPSTREAM BYPASS STRUCTURE IS REQUIRED.

CARTRIDGE SELECTION

CARTRIDGE HEIGHT	27"			18"			18" DEEP		
RECOMMENDED HYDRAULIC DROP (H)	3.05'			2.3'			3.3'		
SPECIFIC FLOW RATE (gpm/sf)	2	1.67	1	2	1.67	1	2	1.67	1
CARTRIDGE FLOW RATE (gpm)	22.5	18.79	11.25	15	12.53	7.5	15	12.53	7.5
PEAK HYDRAULIC CAPACITY	1.0			1.0			1.8		
INLET PERMANENT POOL LEVEL (A)	1'–0"			1'–0"			2'–0"		
OVERALL STRUCTURE HEIGHT (B)	4'–9"			3'–9"			4'–9"		

* 1.67 gpm/sf SPECIFIC FLOW RATE IS APPROVED WITH PHOSPHOSORB (PSORB) MEDIA ONLY

GENERAL NOTES
1. CONTECH TO PROVIDE ALL MATERIALS UNLESS NOTED OTHERWISE.
2. FOR SITE SPECIFIC DRAWINGS WITH DETAILED STORMFILTER CATCHBASIN STRUCTURE DIMENSIONS AND WEIGHTS, PLEASE CONTACT YOUR CONTECH ANGINEERED SOLUTIONS LLC REPRESENTATIVE. www.contechES.com
3. STORMFILTER CATCHBASIN WATER QUALITY STRUCTURE SHALL BE IN ACCORDANCE WITH ALL DESIGN DATA AND INFORMATION CONTAINED IN THIS DRAWING.
4. INLET SHOULD NOT BE LOWER THAN OUTLET. INLET (IF APPLICABLE) AND OUTLET PIPING TO BE SPECIFIED BY ENGINEER AND PROVIDED BY CONTRACTOR.
5. MANUFACTURER TO APPLY A SURFACE BEAD WELD IN THE SHAPE OF THE LETTER "O" ABOVE THE OUTLET PIPE STUB ON THE EXTERIOR SURFACE OF THE STEEL SFCB.
6. STORMFILTER CATCHBASIN EQUIPPED WITH 4 INCH (APPROXIMATE) LONG STUBS FOR INLET (IF APPLICABLE) AND OUTLET PIPING. STANDARD OUTLET STUB IS 8 INCHES IN DIAMETER. MAXIMUM OUTLET STUB IS 15 INCHES IN DIAMETER. CONNECTION TO COLLECTION PIPING CAN BE MADE USING FLEXIBLE COUPLING BY CONTRACTOR.
7. STEEL STRUCTURE TO BE MANUFACTURED OF 1/4 INCH STEEL PLATE. CASTINGS SHALL MEET AASHTO M306 LOAD RATING. TO MEET HS20 LOAD RATING ON STRUCTURE, A CONCRETE COLLAR IS REQUIRED. WHEN REQUIRED, CONCRETE COLLAR WITH #4 REINFORCING BARS TO BE PROVIDED BY CONTRACTOR.
8. FILTER CARTRIDGES SHALL BE MEDIA–FILLED, PASSIVE, SIPHON ACTUATED, RADIAL FLOW, AND SELF CLEANING. RADIAL MEDIA DEPTH SHALL BE 7–INCHES. FILTER MEDIA CONTACT TIME SHALL BE AT LEAST 38 SECONDS.
9. SPECIFIC FLOW RATE IS EQUAL TO THE FILTER TREATMENT CAPACITY (gpm) DIVIDED BY THE FILTER CONTACT SURFACE AREA (sq ft).

INSTALLATION NOTES
A. ANY SUB–BASE, BACKFILL DEPTH, AND/OR ANTI–FLOTATION PROVISIONS ARE SITE–SPECIFIC DESIGN CONSIDERATIONS AND SHALL BE SPECIFIED BY ENGINEER OF RECORD.
B. CONTRACTOR TO PROVIDE EQUIPMENT WITH SUFFICIENT LIFTING AND REACH CAPACITY TO LIFT AND SET THE CATCHBASIN (LIFTING CLUTCHES PROVIDED).
C. CONTRACTOR TO TAKE APPROPRIATE MEASURES TO PROTECT CARTRIDGES FROM CONSTRUCTION–RELATED EROSION RUNOFF.

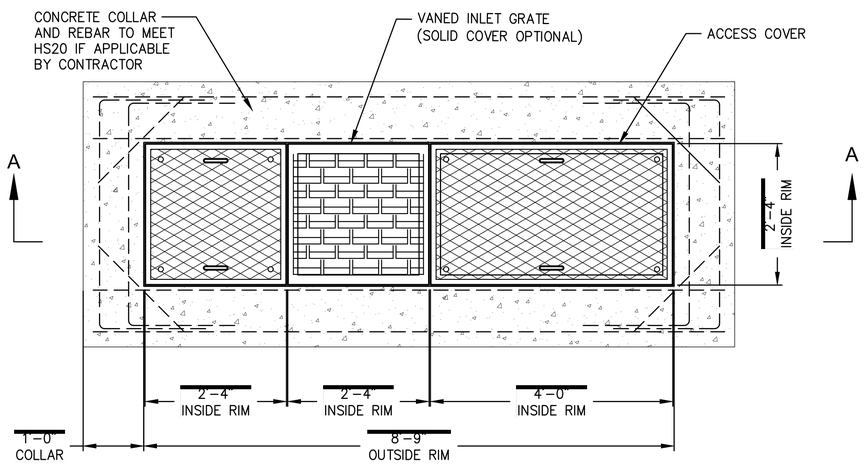

PLAN VIEW

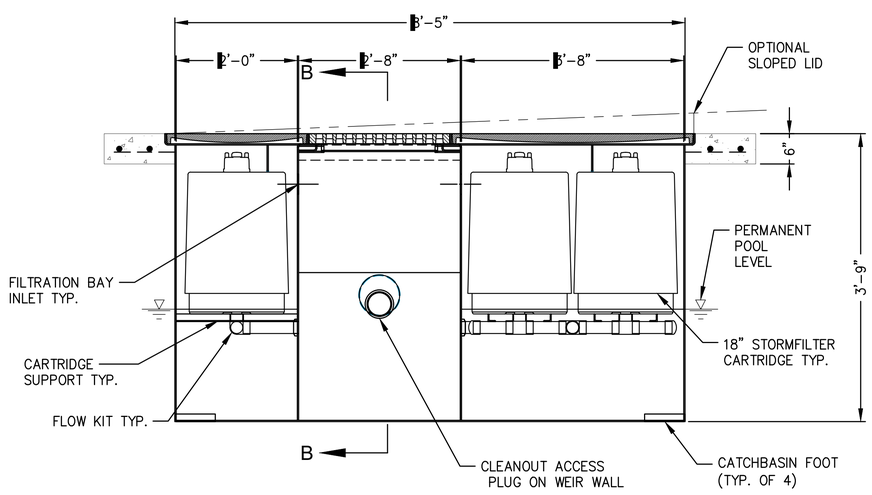

SECTION A-A

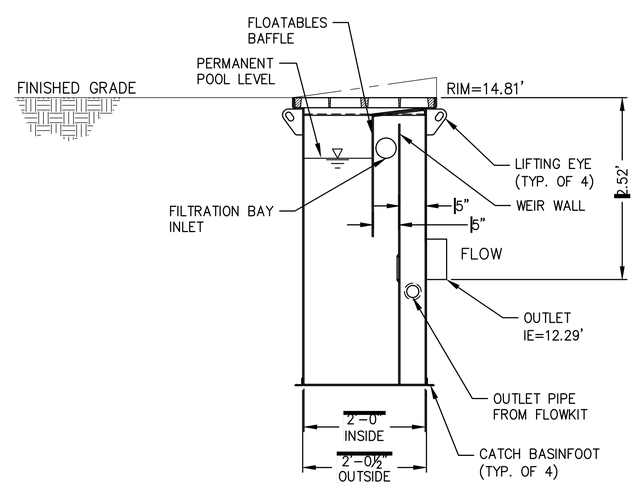

SECTION B-B

3–CARTRIDGE CATCHBASIN STORMFILTER DATA	
STRUCTURE ID	CB 50
WATER QUALITY FLOW RATE (cfs)	0.0387
PEAK FLOW RATE (<1 cfs)	0.4846
RETURN PERIOD OF PEAK FLOW (yrs)	100
CARTRIDGE FLOW RATE (gpm)	7.5
MEDIA TYPE (PERLITE, ZPG, PSORB)	ZPG
RIM ELEVATION	14.81'

PIPE DATA:	I.E.	DIAMETER
INLET STUB	-	-
OUTLET STUB	12.29'	12"

CONFIGURATION

SLOPED LID	NO
SOLID COVER	NO
NOTES/SPECIAL REQUIREMENTS:	

FOR REFERENCE ONLY

1 / C2.24 STORMFILTER DETAIL
NTS

Port of Tacoma
P.O. BOX 1837 TACOMA, WA 98401 (253)383-5841

kpff
2407 North 31st Street, Suite 100
Tacoma, Washington 98407
(253) 396-0150 Fax (253) 396-0162

MADE BY: CMB 5/7/2018 CHECKED BY DATE
SWK 5/9/2018 PROJ. ENGR DATE
DIRECTOR ENG: DATE
PRINTED BY: cbennett May 10, 2018
PORT ADDRESS: ONE SITCUM PLAZA TACOMA WA, 98401-1837

APPROVED:

PARCEL 77 AUTO IMPORT TERMINAL

STORMFILTER DETAILS

C2.24
74 OF 163

CONT/CONS: 070770	TOWNSHIP: 21N	RANGE: 3E	SECTION: 36
M. ID: 201020.01	DAT–HRZ: W83-SF	VERT: PORT OF TACOMA BM#	
PHASE: 100% SET	PARCEL: MULTIPLE	DRAWING SCALE: AS SHOWN	

MARK:	REVISION:	BY:	APPR:	DATE:

THIS DRAWING IS THE PROPERTY OF THE PORT OF TACOMA AND SHALL NOT BE USED ON OTHER WORK, DISCLOSED, COPIED, IN WHOLE OR IN PART, WITHOUT WRITTEN PERMISSION

BINDING EDGE
PORT OF TACOMA FILE: N:\2017\1700082 Automobile Import Terminal Planning\Part 3 - KPFF Design\3.13 Drawings\Current\30pc Design\C2.24 STORMFILTER DETAILS

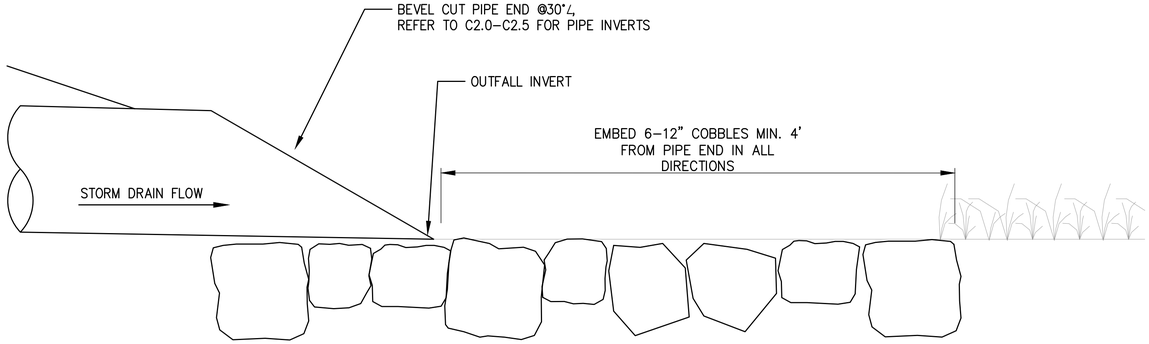

1 C2.25 OUTFALL PROTECTION

1"=1'

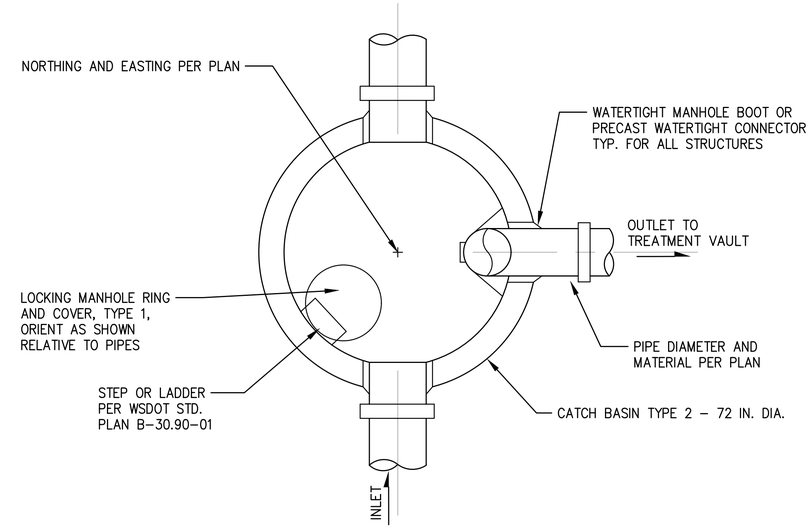

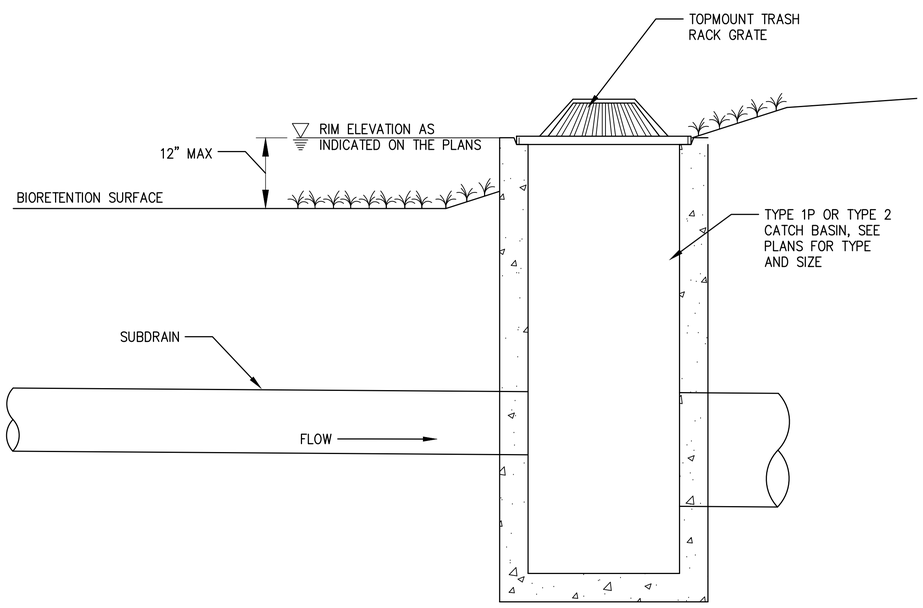

1 C2.25 BIORETENTION OVERFLOW

NTS

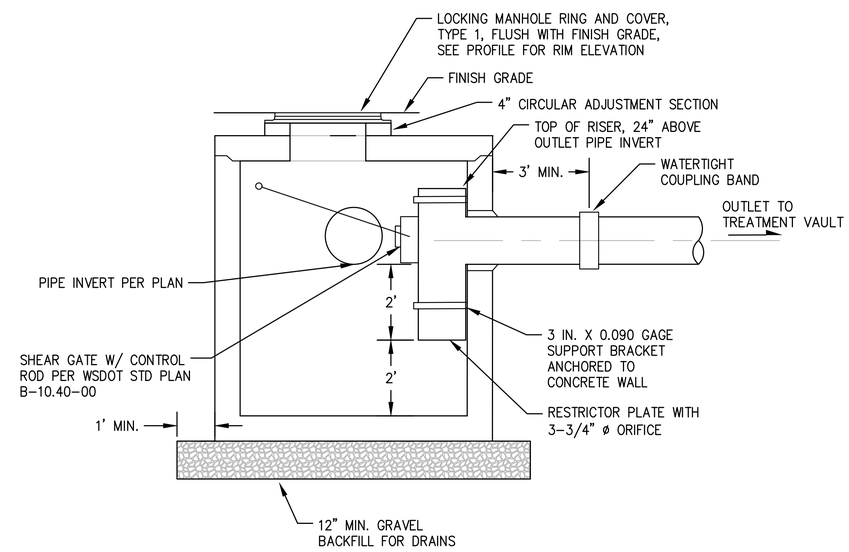

3 C2.25 FLOW SPLITTER STRUCTURE

SCALE: 1"=2'

Port of Tacoma
P.O. BOX 1837 TACOMA, WA 98401 (253)383-5841

kpff
2407 North 31st Street, Suite 100
Tacoma, WA 98407
(253) 396-0150 Fax (253) 396-0162

MARK:	REVISION:	BY:	APPR:	DATE:

STATE OF WASHINGTON
CHRISTOPHER M. BOYLE
32791
REGISTERED PROFESSIONAL ENGINEER

CMB	5/7/2018	
CHECKED BY		DATE
SWK	5/9/2018	
PROJ. ENGR		DATE
PRINTED BY: cbennett May 10, 2018		
PORT ADDRESS: ONE SITCUM PLAZA		
TACOMA WA, 98401-1837		

APPROVED:

DIRECTOR ENG. DATE

PARCEL 77 AUTO IMPORT TERMINAL

STORM DRAINAGE DETAILS

TOWNSHIP: 21N	RANGE: 3E	SECTION: 36	
DAT–HRZ: W83-SF	VERT: PORT OF TACOMA BM#		
PARCEL: MULTIPLE	DRAWING SCALE: AS SHOWN		

C2.25

75 OF 163

CONT/CONS:	070770
M. ID:	201020.01
PHASE:	100% SET

THIS DRAWING IS THE PROPERTY OF THE PORT OF TACOMA AND SHALL NOT BE USED ON OTHER WORK, DISCLOSED, COPIED, IN WHOLE OR IN PART, WITHOUT WRITTEN PERMISSION

PORT OF TACOMA FILE: N:\2017\1700082 Automobile Import Terminal Planning\Part 3 - KPFF Design\3.13 Drawings\Current\30pc Design\C2.25 STORM DRAINAGE DETAILS

BINDING EDGE

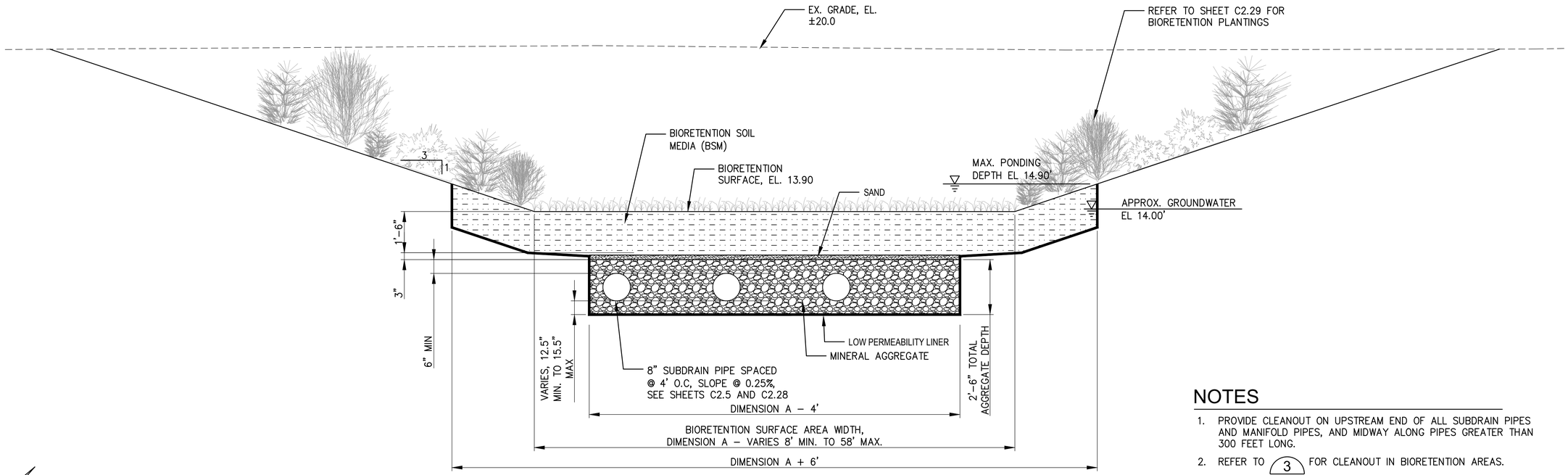

SOUTHEAST BIORETENTION AREA

1 / C2.26

SCALE: 1"=2'

NOTES

1. PROVIDE CLEANOUT ON UPSTREAM END OF ALL SUBDRAIN PIPES AND MANIFOLD PIPES, AND MIDWAY ALONG PIPES GREATER THAN 300 FEET LONG.
2. REFER TO 3 / C2.21 FOR CLEANOUT IN BIORETENTION AREAS.

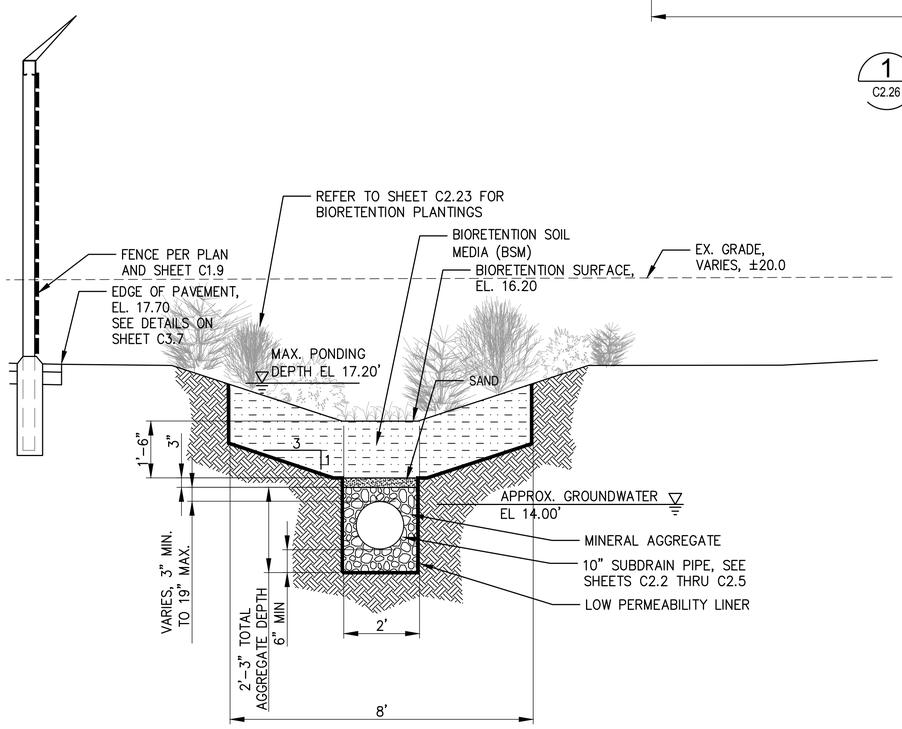

SOUTH BIORETENTION STRIP

2 / C2.26

SCALE: 1"=2'

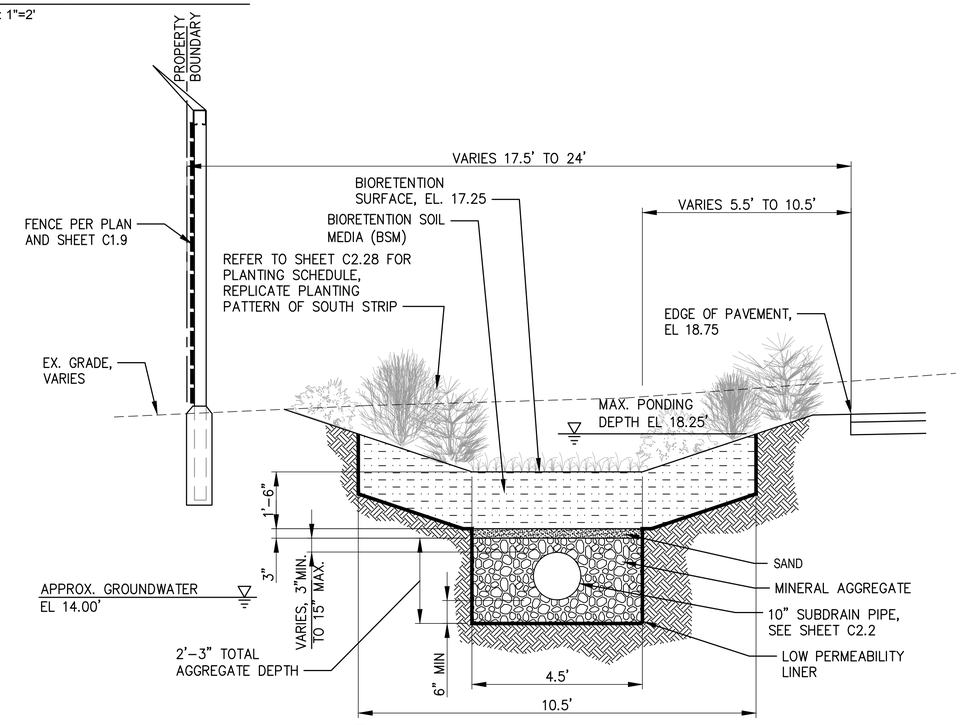

WEST BIORETENTION STRIP

3 / C2.26

SCALE: 1"=2'

Port of Tacoma
P.O. BOX 1837 TACOMA, WA 98401 (253)383-5841

kpff
2407 North 31st Street, Suite 100
Tacoma, WA 98407
(253) 396-0150 Fax (253) 396-0162

MARK:	REVISION:	BY:	APPR:	DATE:

STATE OF WASHINGTON — MADE KING SEY — 32791 — REGISTERED PROFESSIONAL ENGINEER

CMB	5/7/2018	
CHECKED BY	DATE	
SWK	5/9/2018	
DIRECTOR ENG.	DATE	
PROJ. ENGR	DATE	
APPROVED:		

PARCEL 77 AUTO IMPORT TERMINAL

STORM DRAINAGE DETAILS

TOWNSHIP: 21N	RANGE: 3E	SECTION: 36	
DAT–HRZ: W83-SF	VERT: PORT OF TACOMA BM#		
PARCEL: MULTIPLE	DRAWING SCALE: AS SHOWN		

PRINTED BY: cbennett May 10, 2018

PORT ADDRESS: ONE SITCUM PLAZA TACOMA WA, 98401-1837

C2.26

76 OF 163

CONT/CONS:	070770		
M. ID:	201020.01		
PHASE:	100% SET		

THIS DRAWING IS THE PROPERTY OF THE PORT OF TACOMA AND SHALL NOT BE USED ON OTHER WORK, DISCLOSED, COPIED, IN WHOLE OR IN PART, WITHOUT WRITTEN PERMISSION

PORT OF TACOMA FILE: N:\2017\1700082 Automobile Import Terminal Planning\Part 3 - KPFF Design\3.13 Drawings\Current\30pc Design\C2.26a STORM DRAINAGE DETAILS

BINDING EDGE

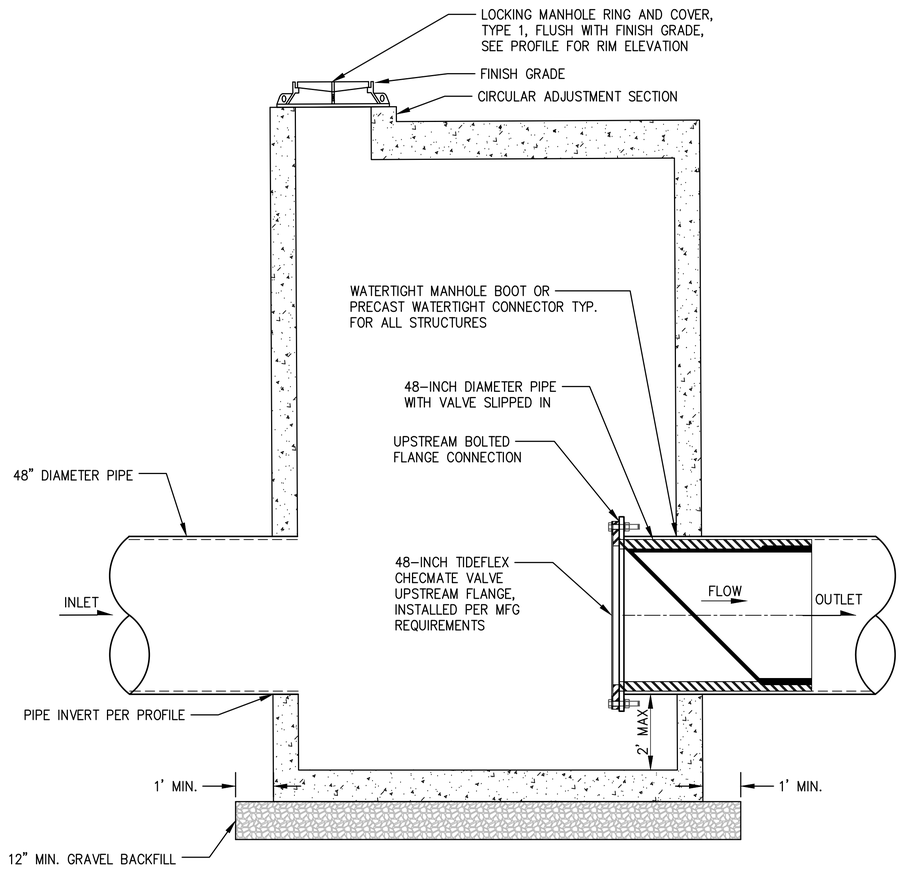

1 C2.27 CATCH BASIN 1 STRUCTURE

SCALE: 1"=2'

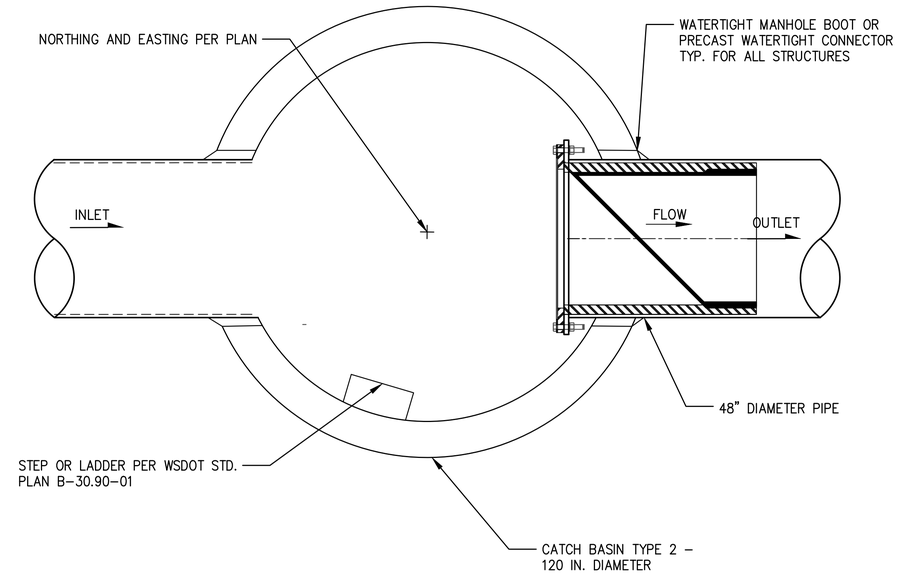

2 C2.27 CATCH BASIN 1 STRUCTURE

SCALE: 1"=2'

NOTES

1. CHECKMATE VALVE SHALL BE SUPPLIED BY MANUFACTURER WITH TWO CLAMPS. CLAMP TURNBUCKLES SHOULD BE ORIENTED 45° FROM TEH TOP CENTER PLUMB LINE.
2. VALVE SHALL BE SLIPPED INTO DOWNSTREAM 48-INCH DIAMETER PIPE. VALVE SHALL BE INSTALLED LEVEL.
3. WATER TIGHT SEAL SHALL BE PROVIDED.

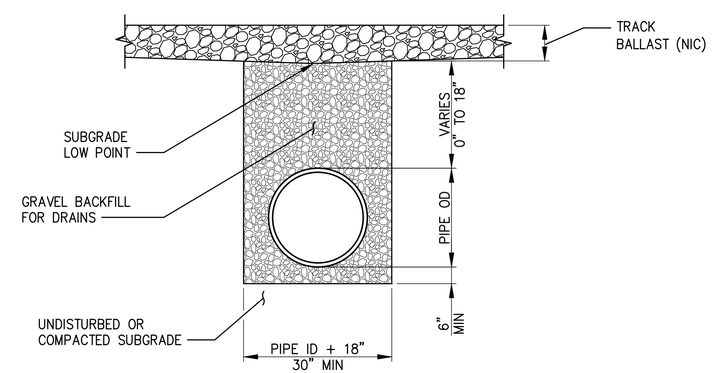

NOTE:
1. CONTRACTOR SHALL PROVIDE DEWATERING SYSTEMS AS REQUIRED DURING PIPE INSTALLATIONS

3 C2.27 TRACK SUBDRAIN

SCALE: 1"=2'

Port of Tacoma
P.O. BOX 1837 TACOMA, WA 98401 (253)383-5841

kpff
2407 North 31st Street, Suite 100
Tacoma, WA 98407-3220
(253) 396-0150 Fax (253) 396-0162

MARK:	REVISION:	BY:	APPR:	DATE:

APPROVED:

CMB	5/7/2018	
CHECKED BY	DATE	
SWK	5/9/2018	
DIRECTOR, ENG.	DATE	PROJ. ENGR DATE

PARCEL 77 AUTO IMPORT TERMINAL

STORM DRAINAGE DETAILS

TOWNSHIP: 21N	RANGE: 3E	SECTION: 36	PRINTED BY: cbennett May 10, 2018
DAT-HRZ: W83-SF	VERT: PORT OF TACOMA BM#		PORT ADDRESS: ONE SITCUM PLAZA TACOMA WA, 98401-1837
PARCEL: MULTIPLE	DRAWING SCALE: AS SHOWN		

C2.27

77 OF 163

CONT/CONS:	070770
M. ID:	201020.01
PHASE:	100% SET

THIS DRAWING IS THE PROPERTY OF THE PORT OF TACOMA AND SHALL NOT BE USED ON OTHER WORK, DISCLOSED, COPIED, IN WHOLE OR IN PART, WITHOUT WRITTEN PERMISSION

PORT OF TACOMA FILE: N:\2017\1700082 Automobile Import Terminal Planning\Part 3 - KPFF Design\3.13 Drawings\Current\30pc Design\C2.27a STORM DRAINAGE DETAILS

BINDING EDGE

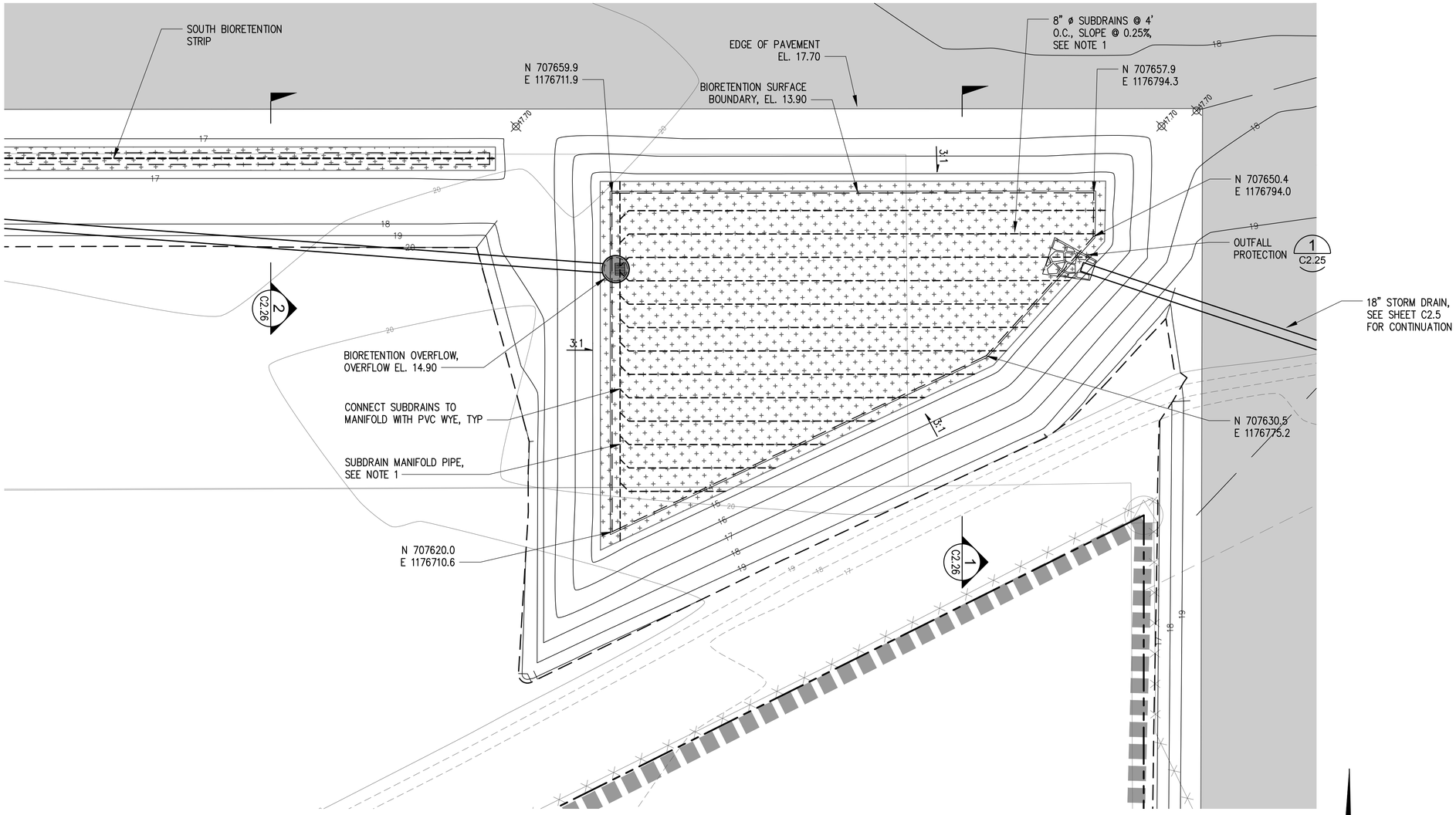

1 / C2.28 SOUTHEAST BIORETENTION AREA

SCALE: 1" = 10'

BIORETENTION AREA NOTES

1. PROVIDE CLEANOUT ON UPSTREAM END OF ALL SUBDRAIN PIPES AND MANIFOLD PIPES, AND MIDWAY ALONG PIPES GREATER THAN 300 FEET LONG. LOCATE CLEANOUTS FOR UPSTREAM END OF PIPES ON SIDE SLOPE AT APPROX. EL. 14.6. REFER TO 3 / C2.21 FOR CLEANOUT IN BIORETENTION AREAS.
2. REFER TO SHEET C2.29 FOR BIORETENTION AREA PLANTING.

Port of Tacoma
P.O. BOX 1837 TACOMA, WA 98401 (253)383-5841

kpff
2407 North 31st Street, Suite 100
Tacoma, WA 98407
(253) 396-0150 Fax (253) 396-0162

MARK:	REVISION:	BY:	APPR:	DATE:

APPROVED:

DIRECTOR ENG. DATE	CHECKED BY	CMB 5/7/2018 DATE
PRINTED BY: cbennett May 10, 2018	PROJ. ENGR	SWK 5/9/2018 DATE
PORT ADDRESS: ONE SITCUM PLAZA TACOMA WA, 98401-1837		

PARCEL 77 AUTO IMPORT TERMINAL

BIORETENTION PLAN

TOWNSHIP: 21N	RANGE: 3E	SECTION: 36	
DAT–HRZ: W83-SF	VERT: PORT OF TACOMA BM#		
PARCEL: MULTIPLE	DRAWING SCALE: AS SHOWN		

C2.28

78 OF 163

CONT/CONS:	070770
M. ID:	201020.01
PHASE:	100% SET

THIS DRAWING IS THE PROPERTY OF THE PORT OF TACOMA AND SHALL NOT BE USED ON OTHER WORK, DISCLOSED, COPIED, IN WHOLE OR IN PART, WITHOUT WRITTEN PERMISSION

BINDING EDGE
PORT OF TACOMA FILE: C:\Users\cbennett\appdata\local\temp\AcPublish_9905\C2.28 BIORETENTION PLAN

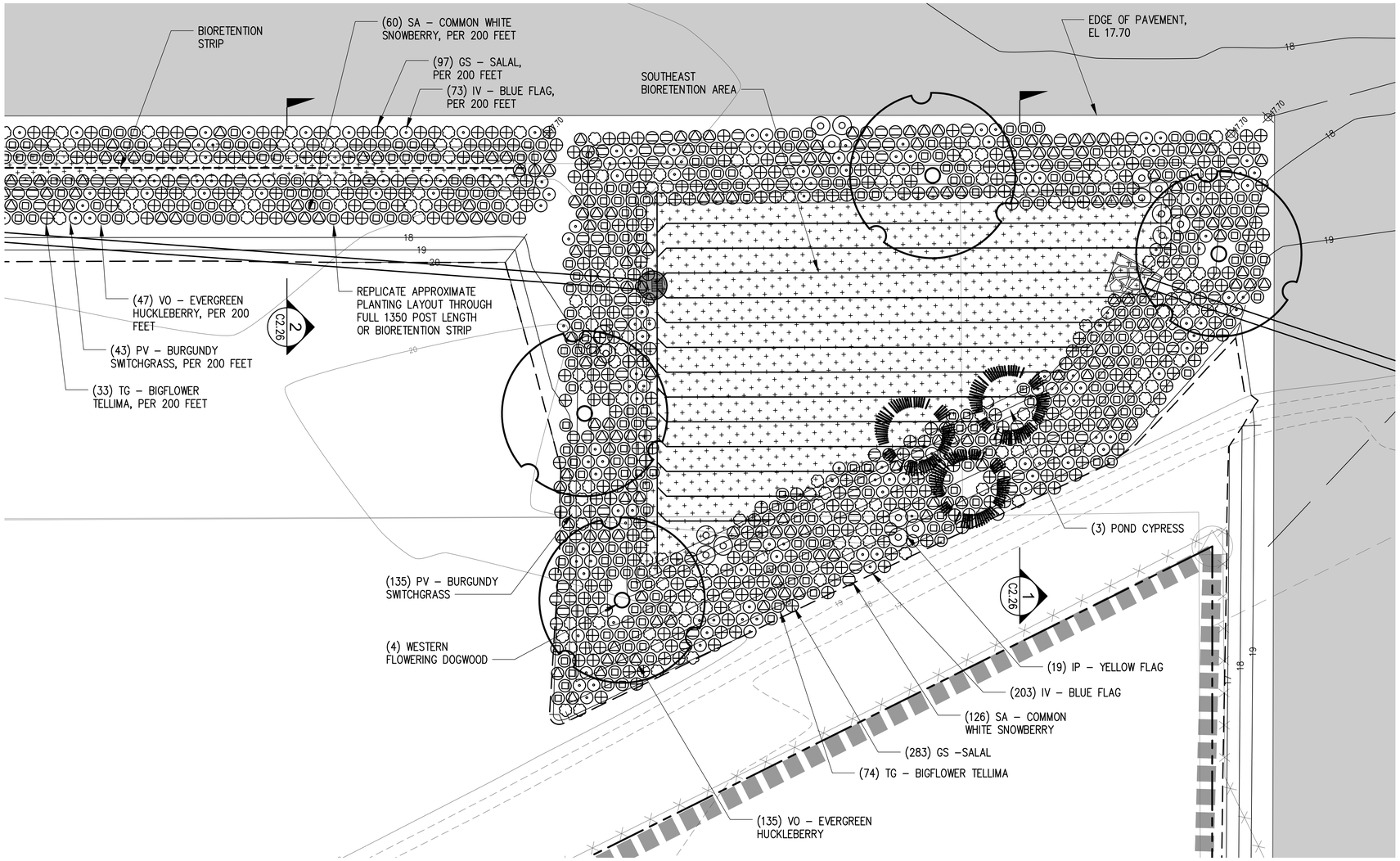

1 C2.29 BIORETENTION AREA PLANTING

SCALE: 1" = 10'

BIORETENTION PLANTING NOTES

1. THE CONTRACTOR SHALL BE RESPONSIBLE FOR FINAL PLANT COUNTS, QUANTITIES AND AREA CALCULATIONS. THE QUANTITIES AND AREA COUNTS HEREIN ARE FOR CONTRACTORS CONVENIENCE ONLY.
2. FINAL LAYOUT OF ALL PLANT MATERIALS SHALL BE COORDINATED WITH THE ENGINEER. CONTRACTOR SHALL BE RESPONSIBLE FOR PROVIDING AND ACCOUNTING FOR ALL BID QUANTITIES OF ALL PLANT MATERIALS. ALL PLANTS NOT INCLUDED IN THE BID QUANITITIES AND NOT USED SHALL BE CREDITED TO THE PORT.
3. ANY ROCK, CLODS, OR DEBRIS GREATER THAN ½" SHALL BE REMOVED FROM SHRUB OR GROUNDCOVER AREAS.
4. FINISH INSTALLATIONS AT THE CROWN OF PLANTS SHALL BE HIGHER THAN ADJACENT FINISH GRADE AS DETAILED.
5. CONTRACTOR SHALL ALLOW FOR THE THE ADDITION OF THE SPECIFIED QUANTITIES OF SOIL, MULCH, AMENDMENTS AND CONDITIONERS IN SOIL PREPARATION AND FINISH GRADING.

PLANT SCHEDULE

SYMBOL	CODE	BIORETENTION AREA			TOTAL	BOTANICAL NAME	COMMON NAME	CONDITION OR CONTAINER	CALIPER OR SPACING
		SOUTHEAST	SOUTH STRIP	WEST STRIP					
	CN	4			4	CORNUS NUTTALLII	WESTERN FLOWERING DOGWOOD	B&B	1.5" CAL.
	TA	3			3	TAXODIUM ASCENDENS	POND CYPRESS	B&B	1.5" CAL.
	GS	283	1180	864	2327	GAULTHERIA SHALLON	SALAL	1 GALLON	24" O.C.
	IP	19			19	IRIS PSEUDOCORUS	YELLOW FLAG	1 GALLON	36" O.C.
	IV	203	845	650	1698	IRIS VERSICOLOR	BLUE FLAG	1 GALLON	24" O.C.
	PV	135	515	383	1033	PANICUM VIRGATUM 'SHENANDOAH'	BURGUNDY SWITCH GRASS	1 GALLON	24" O.C.
	SA	126	646	534	1306	SYMPHORICARPOS ALBUS	COMMON WHITE SNOWBERRY	2 GALLON	24" O.C.
	TG	74	348	294	716	TELLIMA GRANDIFLORA	BIGFLOWER TELLIMA	1 GALLON	24" O.C.
	VO	135	557	418	1110	VACCINIUM OVATUM	EVERGREEN HUCKLEBERRY	2 GALLON	24" O.C.

kpff
2407 North 31st Street, Suite 100
Tacoma, WA 98407
(253) 396-0150 Fax (253) 396-0162

Port of Tacoma
P.O. BOX 1837 TACOMA, WA 98401 (253)383-5841

MARK:	REVISION:	BY:	APPR:	DATE:

STATE OF WASHINGTON
CANADA KING COVEY
32791
REGISTERED PROFESSIONAL ENGINEER

APPROVED:

CMB	5/7/2018	
CHECKED BY	DATE	
SWK	5/9/2018	
DIRECTOR ENG.	DATE	PROJ. ENGR DATE

PRINTED BY: cbennett May 10, 2018
PORT ADDRESS: ONE SITCUM PLAZA TACOMA WA, 98401-1837

PARCEL 77 AUTO IMPORT TERMINAL

BIORETENTION PLANTING PLAN

C2.29

79 OF 163

CONT/CONS: 070/70	TOWNSHIP: 21N	RANGE: 3E	SECTION: 36
M. ID: 201020.01	DAT–HRZ: W83-SF	VERT: PORT OF TACOMA BM#	
PHASE: BID SET	PARCEL: MULTIPLE	DRAWING SCALE: AS SHOWN	

THIS DRAWING IS THE PROPERTY OF THE PORT OF TACOMA AND SHALL NOT BE USED ON OTHER WORK, DISCLOSED, COPIED, IN WHOLE OR IN PART, WITHOUT WRITTEN PERMISSION

PORT OF TACOMA FILE: N:\2017\1700082 Automobile Import Terminal Planning\Part 3 - KPFF Design\3.13 Drawings\Current\30pc Design\C2.29 BIORETENTION PLANTING PLAN
BINDING EDGE

PORT OF TACOMA FILE: N:\2017\1700082 Automobile Import Terminal Planning\Part 3 - KPFF Design\3.13 Drawings\Current\30pc Design\C2.30-C2.31 BLAIR WATERWAY OUTFALL PLAN AND S DRIVEWAY PLAN

BINDING EDGE

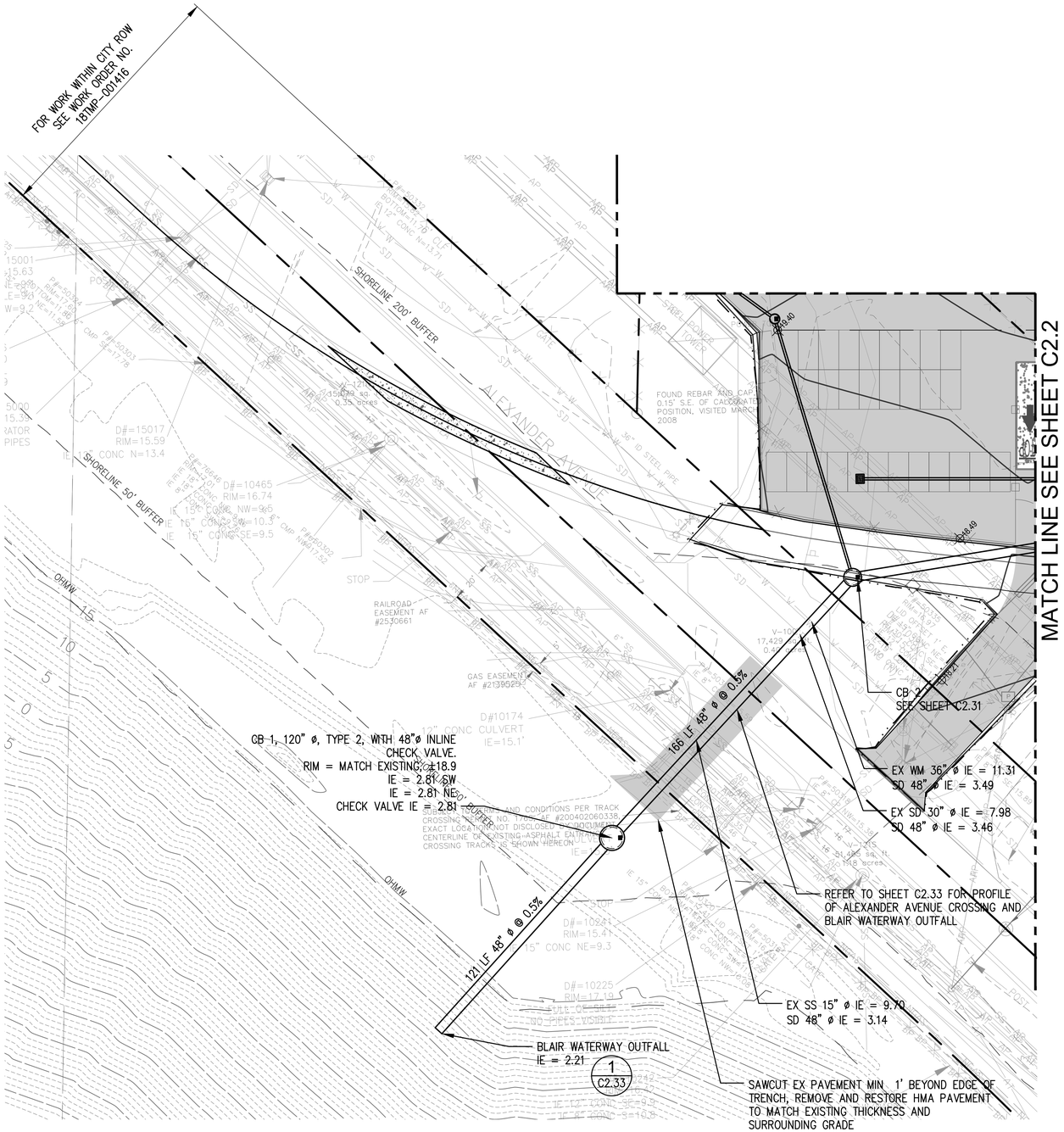

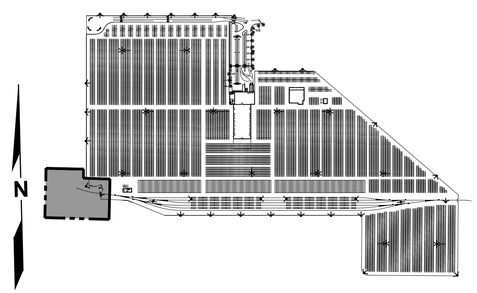

KEY PLAN
NTS

0 30 60 90
SCALE IN FEET

kpff
2407 North 31st Street, Suite 100
Tacoma, WA 98407
(253) 396-0150 Fax (253) 396-0162

Port of Tacoma
P.O. BOX 1837 TACOMA, WA 98401 (253)383-5841

MARK: REVISION: BY: APPR: DATE:

APPROVED:

	CMB	5/7/2018
	CHECKED BY	DATE
	SWK	5/9/2018
DIRECTOR ENG. DATE	PROJ. ENGR	DATE
PRINTED BY: cbennett May 10, 2018		
PORT ADDRESS: ONE SITCUM PLAZA TACOMA WA, 98401-1837		

PARCEL 77 AUTO IMPORT TERMINAL

BLAIR WATERWAY OUTFALL PLAN

CONT/CONS: 070770	TOWNSHIP: 21N	RANGE: 3E	SECTION: 36
M. ID: 201020.01	DAT-HRZ: W83-SF	VERT: PORT OF TACOMA BM#	
PHASE: BID SET	PARCEL: MULTIPLE	DRAWING SCALE: AS SHOWN	

C2.30

80 OF 163

THIS DRAWING IS THE PROPERTY OF THE PORT OF TACOMA AND SHALL NOT BE USED ON OTHER WORK, DISCLOSED, COPIED, IN WHOLE OR IN PART, WITHOUT WRITTEN PERMISSION

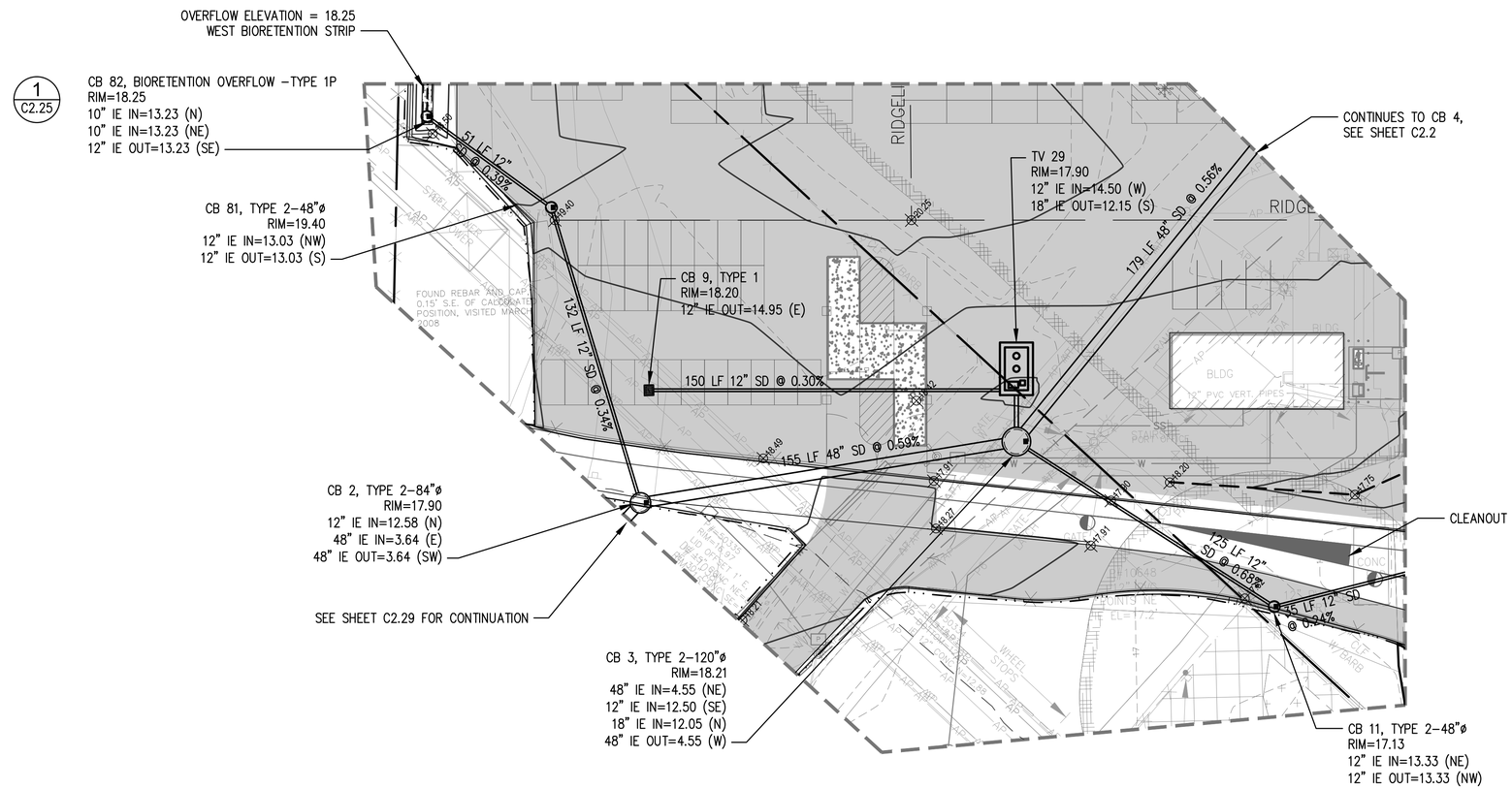

1 C2.31 **SOUTH DRIVEWAY DRAINAGE PLAN**
SCALE: 1" = 30'

0 30 60 90
SCALE IN FEET

Port of Tacoma
P.O. BOX 1837 TACOMA, WA 98401 (253)383-5841

kpff
2407 North 31st Street, Suite 100
Tacoma, WA 98407
(253) 396-0150 Fax (253) 396-0162

MARK:	REVISION:	BY:	APPR:	DATE:

CMB 5/7/2018
CHECKED BY DATE
SWK 5/9/2018
DIRECTOR ENG. DATE PROJ. ENGR DATE
PRINTED BY: cbennett May 10, 2018
PORT ADDRESS: ONE SITCUM PLAZA
TACOMA WA, 98401-1837

APPROVED:

PARCEL 77 AUTO IMPORT TERMINAL

SOUTH DRIVEWAY DRAINAGE PLAN

C2.31

81 OF 163

CONT/CONS: 070770	TOWNSHIP: 21N	RANGE: 3E	SECTION: 36
M. ID: 201020.01	DAT–HRZ: W83-SF	VERT: PORT OF TACOMA BM#	
PHASE: BID SET	PARCEL: MULTIPLE	DRAWING SCALE: AS SHOWN	

THIS DRAWING IS THE PROPERTY OF THE PORT OF TACOMA AND SHALL NOT BE USED ON OTHER WORK, DISCLOSED, COPIED, IN WHOLE OR IN PART, WITHOUT WRITTEN PERMISSION

PORT OF TACOMA FILE: N:\2017\17000082 Automobile Import Terminal Planning\Part 3 - KPFF Design\3.13 Drawings\Current\30pc Design\C2.30-C2.31 BLAIR WATERWAY OUTFALL PLAN AND S DRIVEWAY PLAN
BINDING EDGE

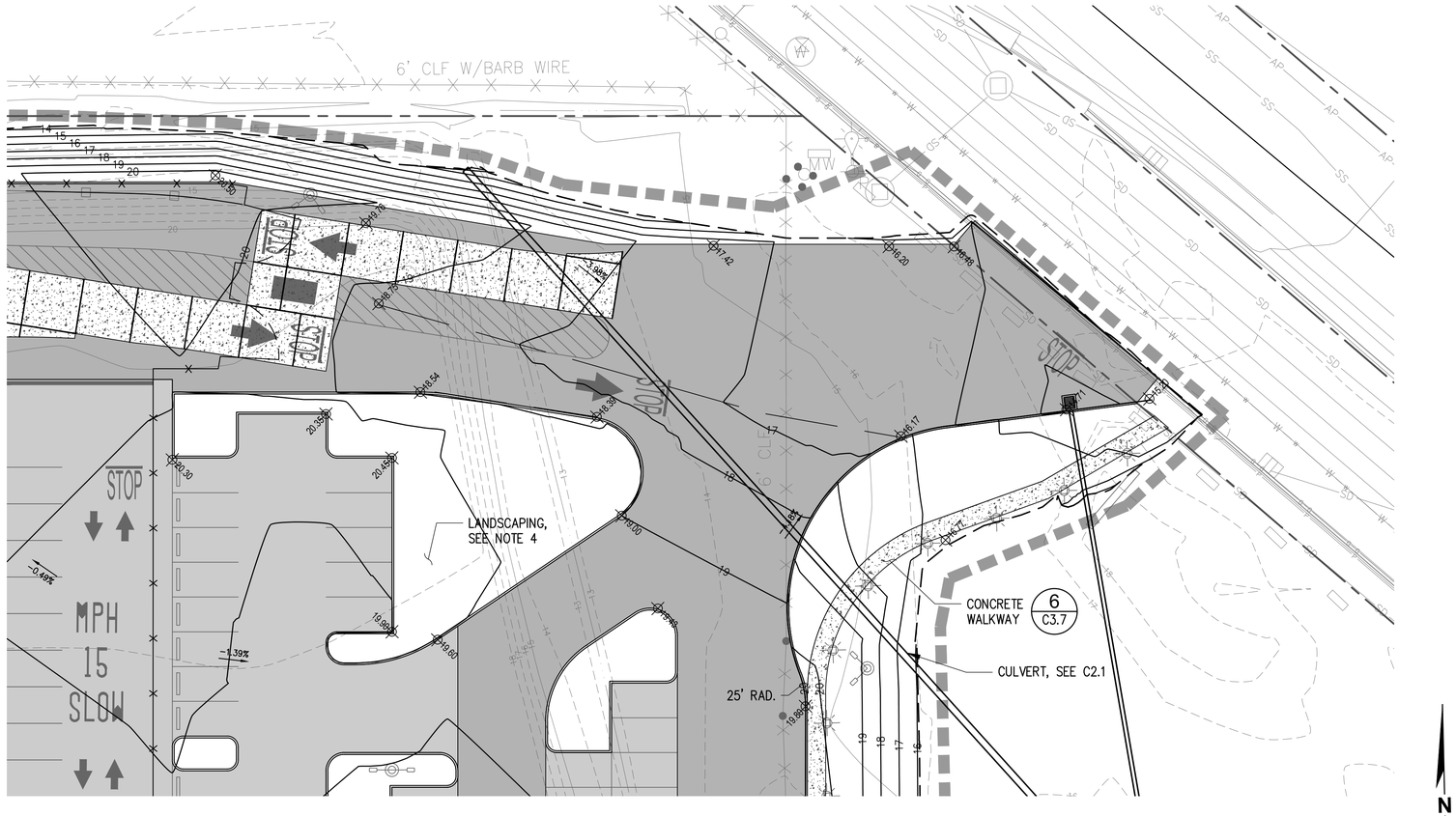

1
C2.32
NORTH DRIVEWAY
1"=20'

0 20 40 60
SCALE IN FEET

NOTES

1. ALL ELEVATIONS ARE FACE OF CURB OR EDGE OF PAVEMENT UNLESS OTHERWSIE NOTED.

kpff
2407 North 31st Street, Suite 100
Tacoma, WA 98407
(253) 396-0150 Fax (253) 396-0162

Port of Tacoma
P.O. BOX 1837 TACOMA, WA 98401 (253)383-5841

MARK:	REVISION:	BY:	APPR:	DATE:

	CMB	5/7/2018
	CHECKED BY	DATE
	SWK	5/9/2018
DIRECTOR ENG. DATE	PROJ. ENGR	DATE
PRINTED BY:	cbennett May 10, 2018	
PORT ADDRESS:	ONE SITCUM PLAZA	
	TACOMA WA, 98401-1837	

APPROVED:

PARCEL 77 AUTO IMPORT TERMINAL

NORTH DRIVEWAY
GRADING AND DRAINAGE PLAN

TOWNSHIP: 21N	RANGE: 3E	SECTION: 36	
DAT–HRZ: W83-SF	VERT:	PORT OF TACOMA BM#	
PARCEL: MULTIPLE	DRAWING SCALE:	AS SHOWN	

C2.32

82 OF 163

CONT/CONS:	070770
M. ID:	201020.01
PHASE:	BID SET

THIS DRAWING IS THE PROPERTY OF THE PORT OF TACOMA AND SHALL NOT BE USED ON OTHER WORK, DISCLOSED, COPIED, IN WHOLE OR IN PART, WITHOUT WRITTEN PERMISSION

PORT OF TACOMA FILE: N:\2017\1700082 Automobile Import Terminal Planning\Part 3 - KPFF Design\3.13 Drawings\Current\30pc Design\C2.32 NORTH DRIVE GRADING AND DRAINAGE PLAN
BINDING EDGE

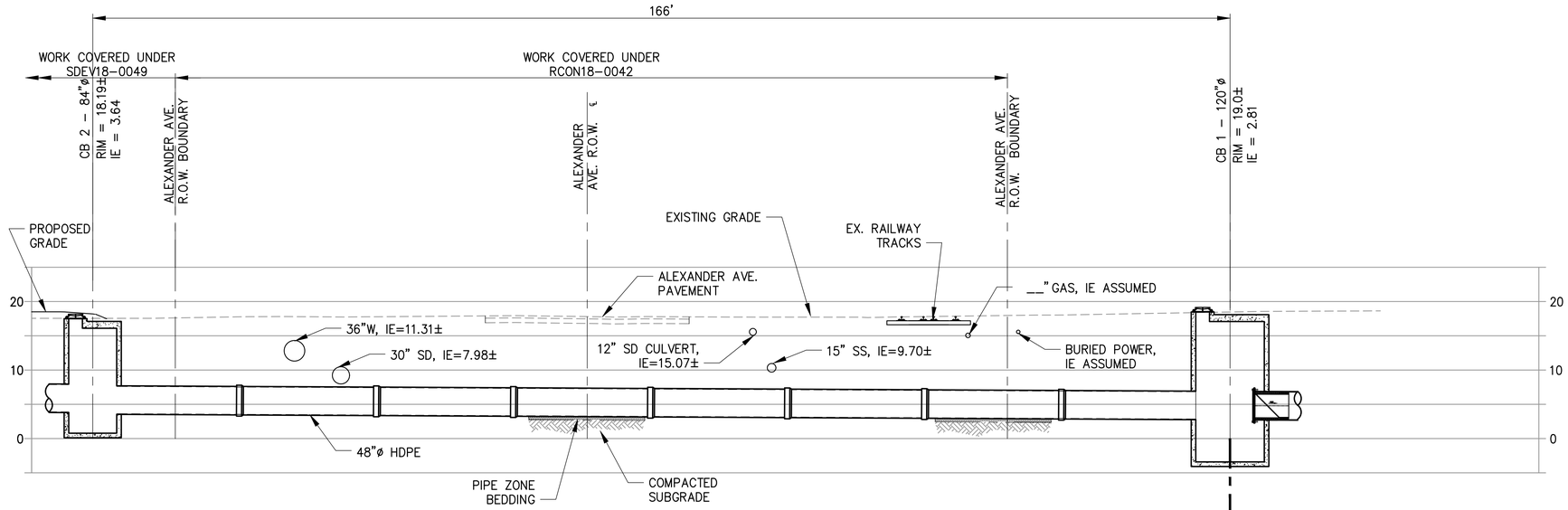

1 C2.33 **STORM DRAIN CROSSING OF ALEXANDER AVENUE**
SCALE: 1" = 10'

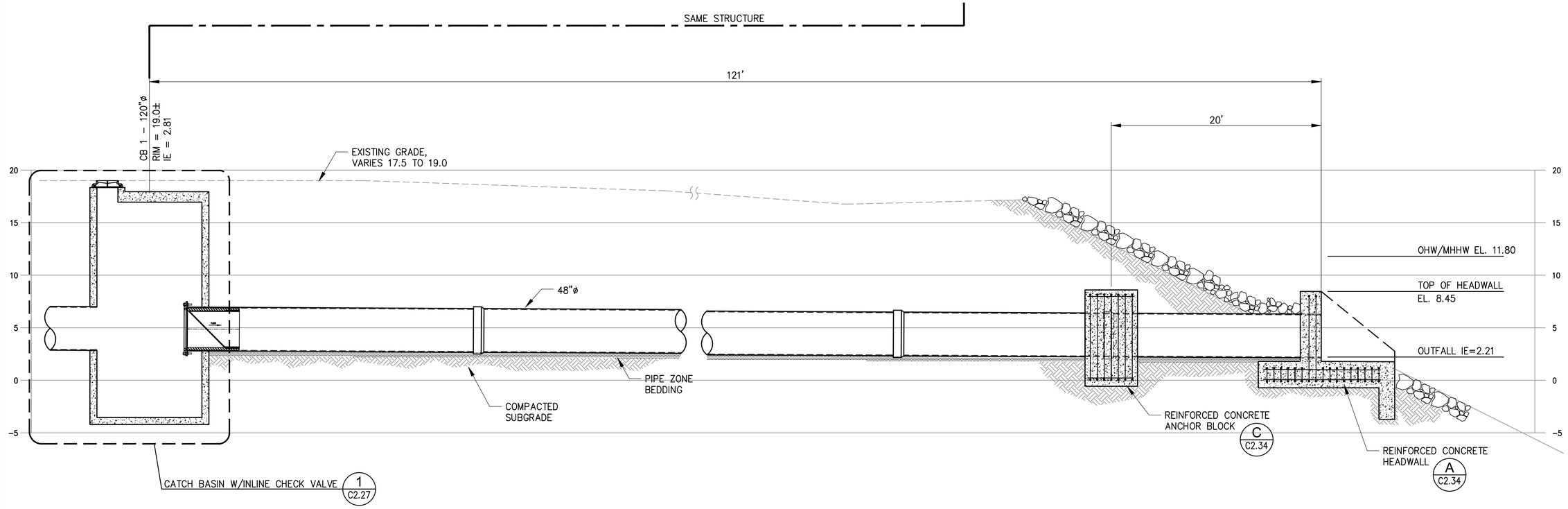

1 C2.33 **BLAIR WATERWAY OUTFALL**
SCALE: 1" = 5'

Port of Tacoma
P.O. BOX 1837 TACOMA, WASHINGTON 98401 (253)383-5841

kpff
2407 North 31st Street, Suite 100
Tacoma, Washington 98407
(253) 396-0150 Fax (253) 396-0162

MARK:	REVISION:	BY:	APPR:	DATE:

CMB 5/7/2018
CHECKED BY DATE
SWK 5/9/2018
PROJ. ENGR DATE
DIRECTOR ENG. DATE
PRINTED BY: cbennett May 10, 2018
PORT ADDRESS: ONE SITCUM PLAZA TACOMA WA, 98401-1837

APPROVED:

PARCEL 77 AUTO IMPORT TERMINAL

BLAIR OUTFALL PROFILE AND SECTIONS

TOWNSHIP: 21N | RANGE: 3E | SECTION: 36
DAT–HRZ: W83-SF | VERT: PORT OF TACOMA BM#
PARCEL: MULTIPLE | DRAWING SCALE: AS SHOWN

C2.33
83 OF 163

CONT/CONS: 070770
M. ID: 201020.01
PHASE: BID SET

THIS DRAWING IS THE PROPERTY OF THE PORT OF TACOMA AND SHALL NOT BE USED ON OTHER WORK, DISCLOSED, COPIED, IN WHOLE OR IN PART, WITHOUT WRITTEN PERMISSION

PORT OF TACOMA FILE: N:\2017\1700082 Automobile Import Terminal Planning\Part 3 - KPFF Design\3.13 Drawings\Current\30pc Design\C2.33 BLAIR OUTFALL PROFILE AND SECTIONS
BINDING EDGE

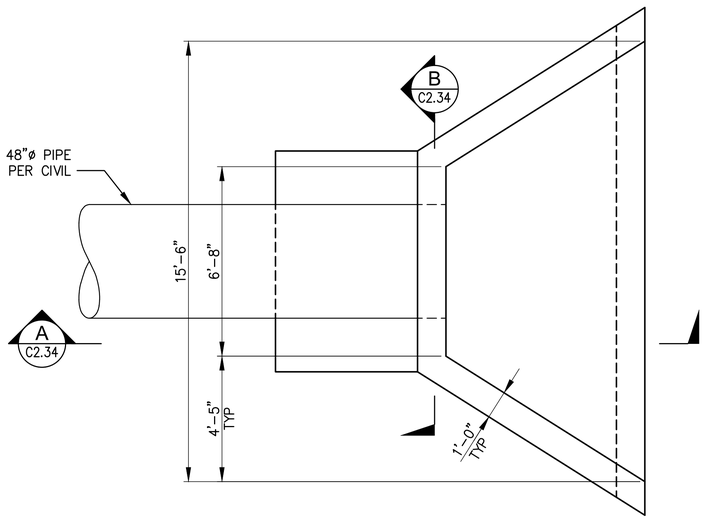

1 C2.34 **PLAN**
SCALE: 3/8" = 1'-0"

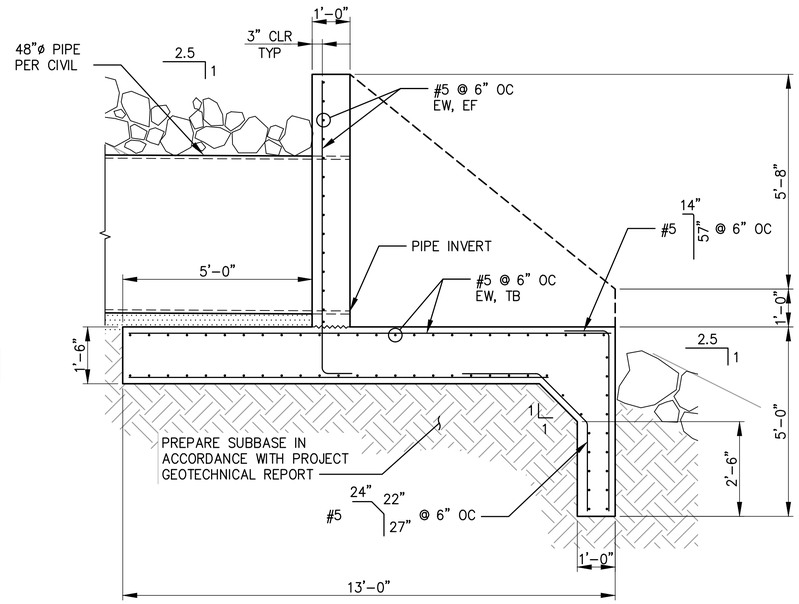

A C2.34 **SECTION**
SCALE: 1/2" = 1'-0"

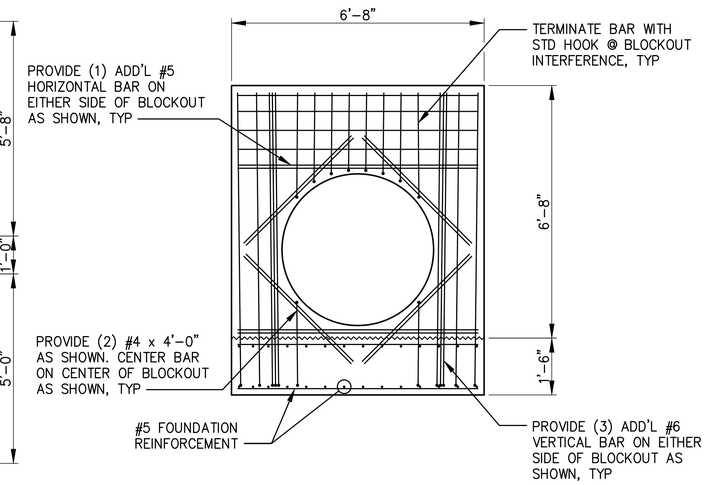

B C2.34 **SECTION**
SCALE: 1/2" = 1'-0"

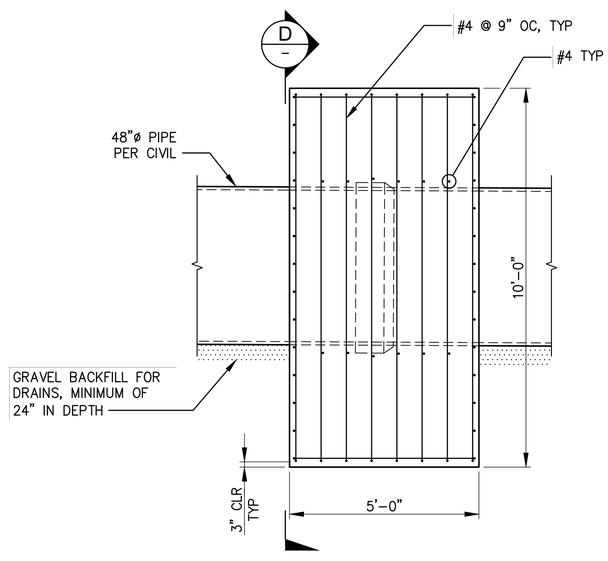

C C2.34 **CONCRETE ANCHOR BLOCK PLAN**
SCALE: 1/2" = 1'-0"

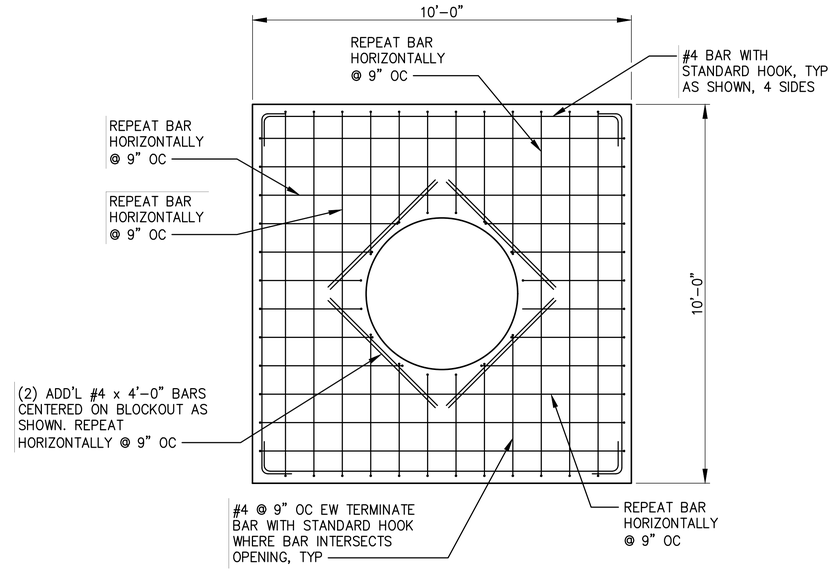

D C2.34 **SECTION**
SCALE: 1/2" = 1'-0"

Port of Tacoma
P.O. BOX 1837 TACOMA, WA 98401 (253)383-5841

kpff
2407 North 31st Street, Suite 100
Tacoma, WA 98407
(253) 396-0150 Fax (253) 396-0162

MARK:	REVISION:	BY:	APPR:	DATE:

CMB 5/7/2018
CHECKED BY DATE
SWK 5/9/2018
DIRECTOR ENG. DATE PROJ. ENGR DATE
PRINTED BY: cbennett May 10, 2018
PORT ADDRESS: ONE SITCUM PLAZA
TACOMA WA, 98401-1837

APPROVED:

PARCEL 77 AUTO IMPORT TERMINAL

BLAIR OUTFALL DETAILS

C2.34

84 OF 163

CONT/CONS: 070770	TOWNSHIP: 21N	RANGE: 3E	SECTION: 36
M. ID: 201020.01	DAT-HRZ: W83-SF	VERT: PORT OF TACOMA BM#	
PHASE: BID SET	PARCEL: MULTIPLE	DRAWING SCALE: AS SHOWN	

THIS DRAWING IS THE PROPERTY OF THE PORT OF TACOMA AND SHALL NOT BE USED ON OTHER WORK, DISCLOSED, COPIED, IN WHOLE OR IN PART, WITHOUT WRITTEN PERMISSION

BINDING EDGE
PORT OF TACOMA FILE: N:\2017\1700082 Automobile Import Terminal Planning\Part 3 - KPFF Design\3.13 Drawings\Current\30pc Design\C2.34 BLAIR OUTFALL DETAILS