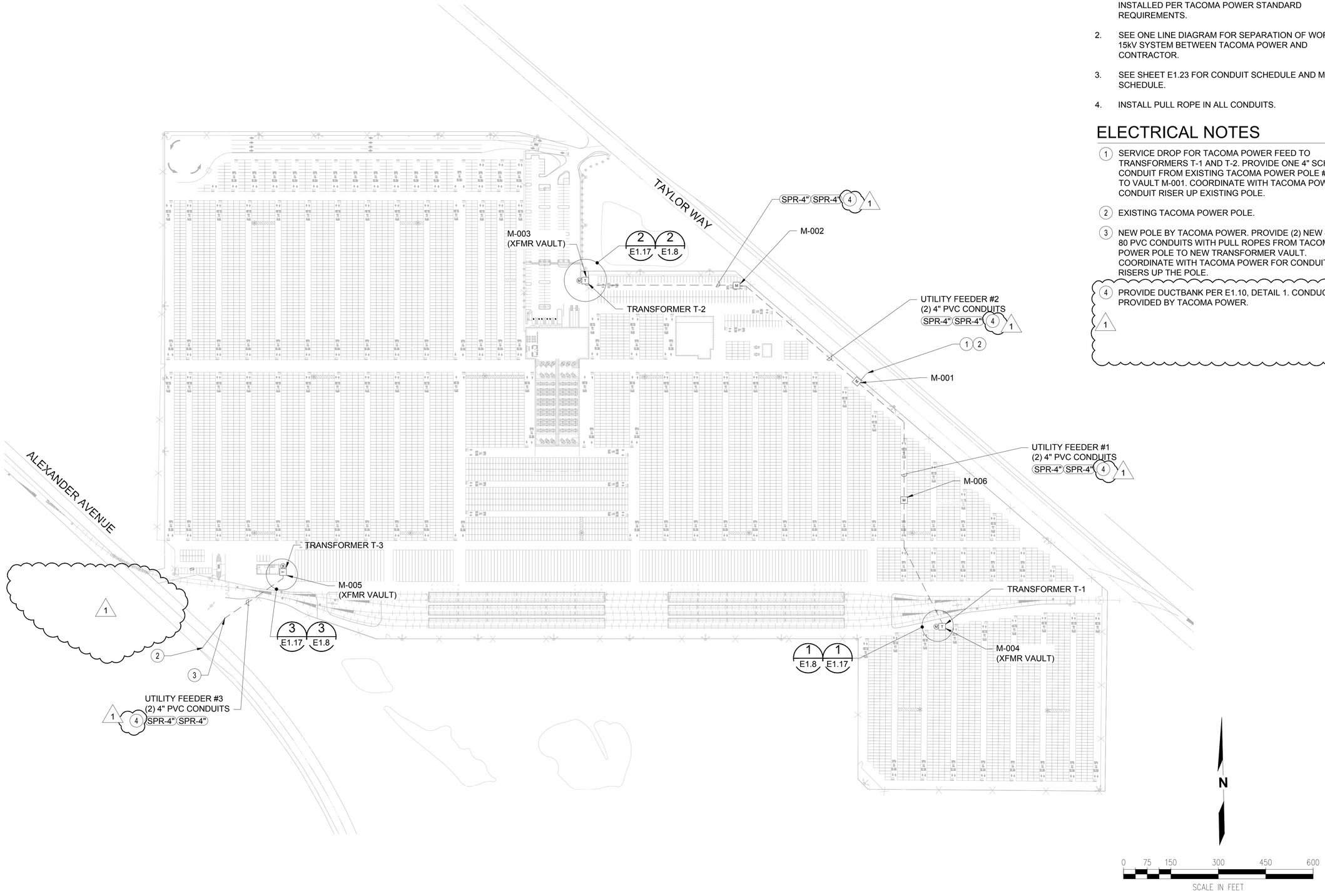

GENERAL NOTES

1. ALL 15kV DUCTBANK AND VAULT WORK SHALL BE INSTALLED PER TACOMA POWER STANDARD REQUIREMENTS.
2. SEE ONE LINE DIAGRAM FOR SEPARATION OF WORK OF 15kV SYSTEM BETWEEN TACOMA POWER AND CONTRACTOR.
3. SEE SHEET E1.23 FOR CONDUIT SCHEDULE AND MANHOLE SCHEDULE.
4. INSTALL PULL ROPE IN ALL CONDUITS.

ELECTRICAL NOTES

1. SERVICE DROP FOR TACOMA POWER FEED TO TRANSFORMERS T-1 AND T-2. PROVIDE ONE 4" SCH 80 CONDUIT FROM EXISTING TACOMA POWER POLE #45310 TO VAULT M-001. COORDINATE WITH TACOMA POWER FOR CONDUIT RISER UP EXISTING POLE.
2. EXISTING TACOMA POWER POLE.
3. NEW POLE BY TACOMA POWER. PROVIDE (2) NEW 4" SCH 80 PVC CONDUITS WITH PULL ROPES FROM TACOMA POWER POLE TO NEW TRANSFORMER VAULT. COORDINATE WITH TACOMA POWER FOR CONDUIT RISERS UP THE POLE.
4. PROVIDE DUCTBANK PER E1.10, DETAIL 1. CONDUCTORS PROVIDED BY TACOMA POWER.

1

Port of Tacoma
P.O. BOX 1837 TACOMA, WA 98401 (253)383-5841

kpff
2407 North 31st Street, Suite 100
Tacoma, Washington 98407
(253) 396-0150 Fax (253) 396-0162

MARK:	REVISION:	BY:	APPR:	DATE:
1	ADDENDUM #4	J.T.		6/5/18

DUNCAN K. SLATELLIS
STATE OF WASHINGTON
REGISTERED PROFESSIONAL ENGINEER
5/9/18

APPROVED:

DCR	5/7/18	
CHECKED BY	DATE	
DKS	5/9/18	
DIRECTOR ENG.	DATE	PROJ. ENGR

PRINTED BY: jeff Jun 05, 2018
PORT ADDRESS: ONE SITCUM PLAZA
TACOMA WA, 98401-1837

PARCEL 77 AUTO IMPORT TERMINAL

ELECTRICAL
13.8KV POWER DISTRIBUTION PLAN

TOWNSHIP: 21N	RANGE: 3E	SECTION: 36	
DAT-HRZ: W83-SF	VERT: PORT OF TACOMA BM#		
PARCEL: MULTIPLE	DRAWING SCALE: AS SHOWN		

E1.1

120 OF 163

CONT/CONS:	070770
M. ID:	201020.01
PHASE:	PRELIMINARY

THIS DRAWING IS THE PROPERTY OF THE PORT OF TACOMA AND SHALL NOT BE USED ON OTHER WORK, DISCLOSED, COPIED, IN WHOLE OR IN PART, WITHOUT WRITTEN PERMISSION

BINDING EDGE

PORT OF TACOMA FILE: R:\5650-077.00\Dwgs\e1

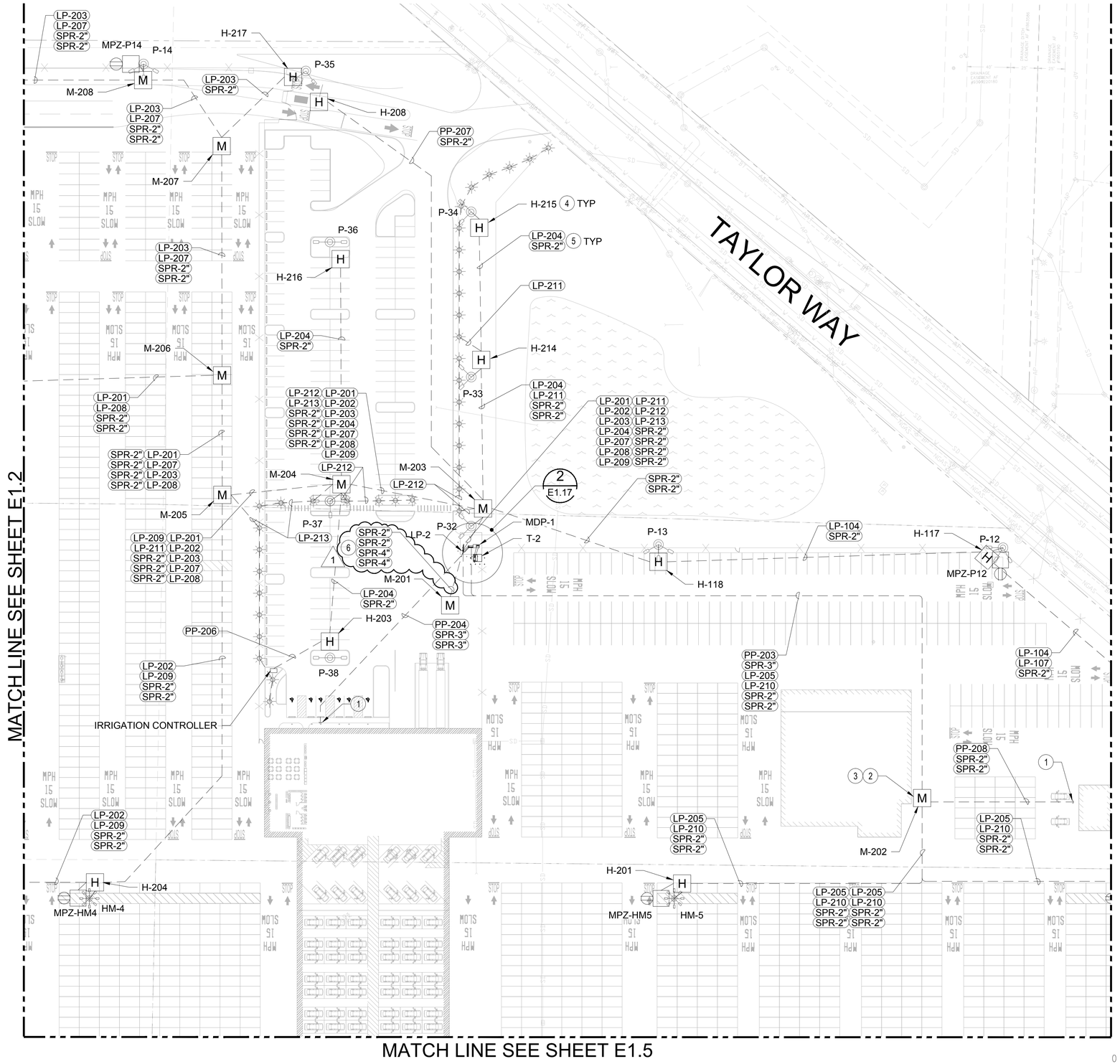

GENERAL NOTES

1. INCLUDE PULL ROPE IN ALL CONDUIT.
2. ALL CONDUIT BELOW GRADE SHALL BE SCHEDULE 80 PVC UNLESS OTHERWISE NOTED.
3. REFER TO SHEET E1.23 FOR CONDUIT AND CABLE SCHEDULE.
4. REFER TO CIVIL SHEETS U1.18-U1.24 FOR ALL VAULT, MANHOLE, AND POLE LOCATIONS.

ELECTRICAL NOTES

1. CAP CONDUIT 5' FROM BUILDING FOUNDATION.
2. INSTALL MANHOLE WITH WALL FACING BUILDING 5' FROM BUILDING FOUNDATION.
3. SPLICE HIGH MAST LIGHT CIRCUITS IN MANHOLE.
4. PROVIDE HANDHOLE AND POLE CONNECTION PER SHEET E1.18 DETAIL. TYPICAL ALL HANDHOLES THIS SHEET.
5. PROVIDE CONDUIT/DUCTBANK PER DUCTBANK DETAIL 2, SHEET E1.19. TYPICAL ALL DUCTBANKS THIS SHEET.
6. RUN 2 SPARE 2" CONDUITS TO LP-2. RUN 2 SPARE 4" CONDUITS TO MP-1. (1)

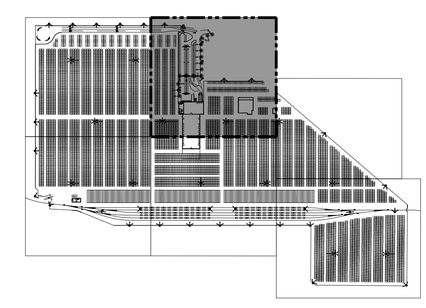

KEY PLAN
NTS

Port of Tacoma
P.O. BOX 1837 TACOMA, WA 98401 (253)383-5841

kpff
2407 North 31st Street, Suite 100
Tacoma, Washington 98407
(253) 396-0150 Fax (253) 396-0162

MARK:	REVISION:	BY:	APPR:	DATE:
1	ADDENDUM #4	J.T.		6/5/18

DULLITOS K. SAPELLIS, STATE OF WASHINGTON, REGISTERED PROFESSIONAL ENGINEER 5/9/18

APPROVED:

DCR	5/7/18	
CHECKED BY	DATE	
DKS	5/9/18	
DIRECTOR ENG.	DATE	PROJ. ENGR
PRINTED BY:	jeff Jun 05, 2018	
PORT ADDRESS:	ONE SITCUM PLAZA TACOMA WA, 98401-1837	
DRAWING SCALE:	AS SHOWN	

PARCEL 77 AUTO IMPORT TERMINAL

ELECTRICAL LOW VOLTAGE POWER DISTRIBUTION PLAN
AREA 2

E1.3

122 OF 163

CONT/CONS:	070770	TOWNSHIP: 21N	RANGE: 3E
M. ID:	201020.01	DAT-HRZ: W83-SF	SECTION: 36
PHASE:	PRELIMINARY	PARCEL: MULTIPLE	VERT: PORT OF TACOMA BM#
			DRAWING SCALE: AS SHOWN

THIS DRAWING IS THE PROPERTY OF THE PORT OF TACOMA AND SHALL NOT BE USED ON OTHER WORK, DISCLOSED, COPIED, IN WHOLE OR IN PART, WITHOUT WRITTEN PERMISSION

BINDING EDGE
PORT OF TACOMA FILE: R:\5650-077.00\Dwgs\e2-e7

CALCULATED DEMAND LOAD				
FEEDER NO.	FACILITY	CONNECTED LOAD (kVA)	DEMAND LOAD (kVA)	TOTAL (kVA)
1	PANEL LP-1	50.08	59.28	
	TOTAL	50.08	59.28	59.28
2	PROCESSING BUILDING (PHASE 1)	836.20	853.94	
	PROCESSING BUILDING (FUTURE)	157.82	145.87	
	BODY SHOP	383.71	410.54	
	CAR WASH	192.94	188.56	
	LP-2 (INCLUDES NE GUARD HOUSE)	58.55	66.97	
	TOTAL	1629.23	1665.89	1665.89
3	MAINTENANCE BUILDING	81.88	82.18	
	GUARD HOUSE SW	6.45	5.65	
	LP-3	18.50	21.70	
	TOTAL	106.83	109.53	109.53

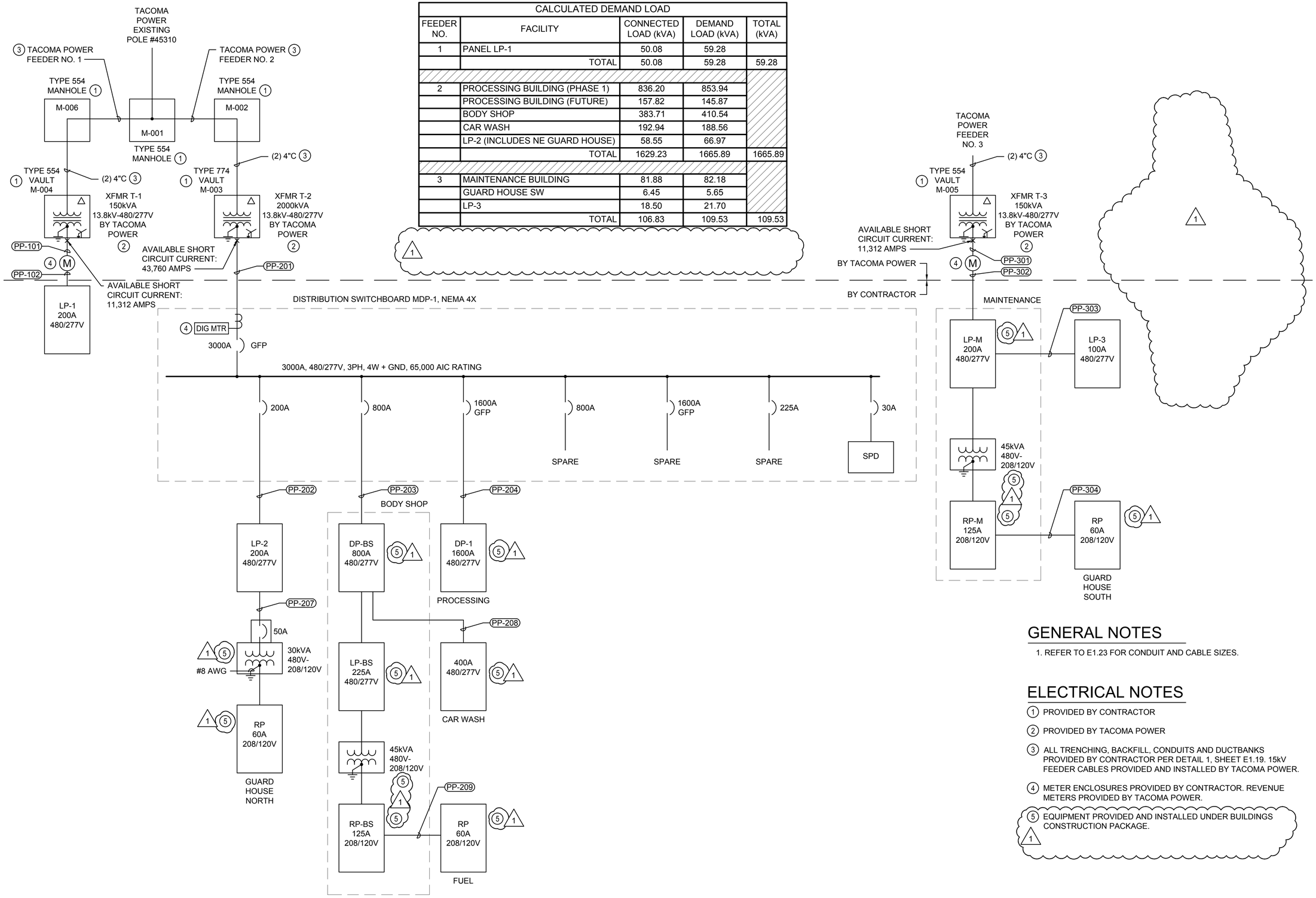

GENERAL NOTES

1. REFER TO E1.23 FOR CONDUIT AND CABLE SIZES.

ELECTRICAL NOTES

(1) PROVIDED BY CONTRACTOR

(2) PROVIDED BY TACOMA POWER

(3) ALL TRENCHING, BACKFILL, CONDUITS AND DUCTBANKS PROVIDED BY CONTRACTOR PER DETAIL 1, SHEET E1.19. 15kV FEEDER CABLES PROVIDED AND INSTALLED BY TACOMA POWER.

(4) METER ENCLOSURES PROVIDED BY CONTRACTOR. REVENUE METERS PROVIDED BY TACOMA POWER.

(5) EQUIPMENT PROVIDED AND INSTALLED UNDER BUILDINGS CONSTRUCTION PACKAGE.

(1)

Port of Tacoma
P.O. BOX 1837 TACOMA, WA 98401 (253)383-5841
kpff
2407 North 31st Street, Suite 100
Tacoma, Washington 98407
(253) 396-0150 Fax (253) 396-0162

MARK:	REVISION:	BY:	APPR:	DATE:
1	ADDENDUM #4	J.T.		6/5/18

DIMITRIOS K. SIMTERLIS, STATE OF WASHINGTON, REGISTERED PROFESSIONAL ENGINEER, 23191 — 5/9/18

APPROVED:

DCR	5/7/18	
CHECKED BY	DATE	
DKS	5/9/18	
PROJ. ENGR	DATE	
DIRECTOR ENG.	DATE	

PRINTED BY: jeff Jun 06, 2018
PORT ADDRESS: ONE SITCUM PLAZA TACOMA WA. 98401-1837

PARCEL 77 AUTO IMPORT TERMINAL

ELECTRICAL
ONE LINE DIAGRAM

TOWNSHIP: 21N	RANGE: 3E	SECTION: 36	
DAT-HRZ: W83-SF	VERT: PORT OF TACOMA BM#		
PARCEL: MULTIPLE	DRAWING SCALE: AS SHOWN		

E1.16

135 OF 163

CONT/CONS:	070770
M. ID:	201020.01
PHASE:	PRELIMINARY

BINDING EDGE

GENERAL NOTES

1. INCLUDE PULL ROPE IN ALL CONDUIT.
2. ALL CONDUIT BELOW GRADE SHALL BE SCHEDULE 80 PVC UNLESS OTHERWISE NOTEDL.
3. REFER TO SHEET E1.23 FOR CONDUIT AND CABLE SCHEDULE.
4. REFER TO TACOMA POWER STANDARDS FOR MEDIUM VOLTAGE INSTALLATIONS.
5. SEE ONE LINE DIAGRAM E1.16 FOR CONDUIT AND WIRE SIZES TO THIS EQUIPMENT.
6. SEE SHEET E1.8 FOR GROUNDING DETAILS..

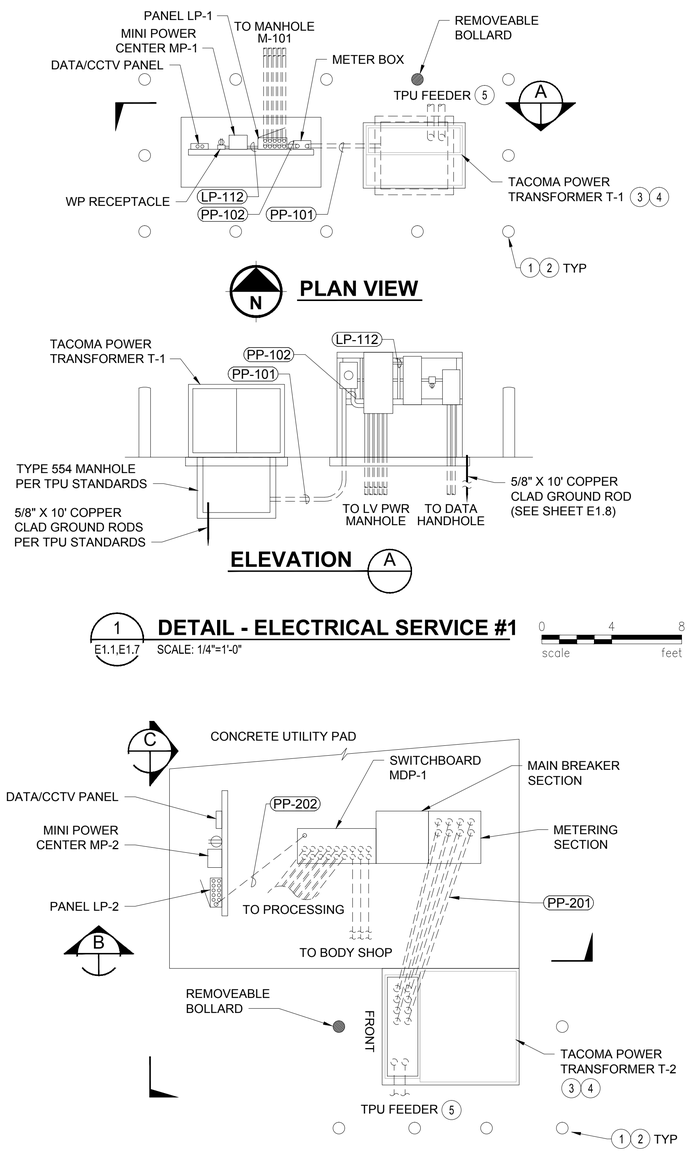

1 E1.1,E1.7 **DETAIL - ELECTRICAL SERVICE #1** SCALE: 1/4"=1'-0"

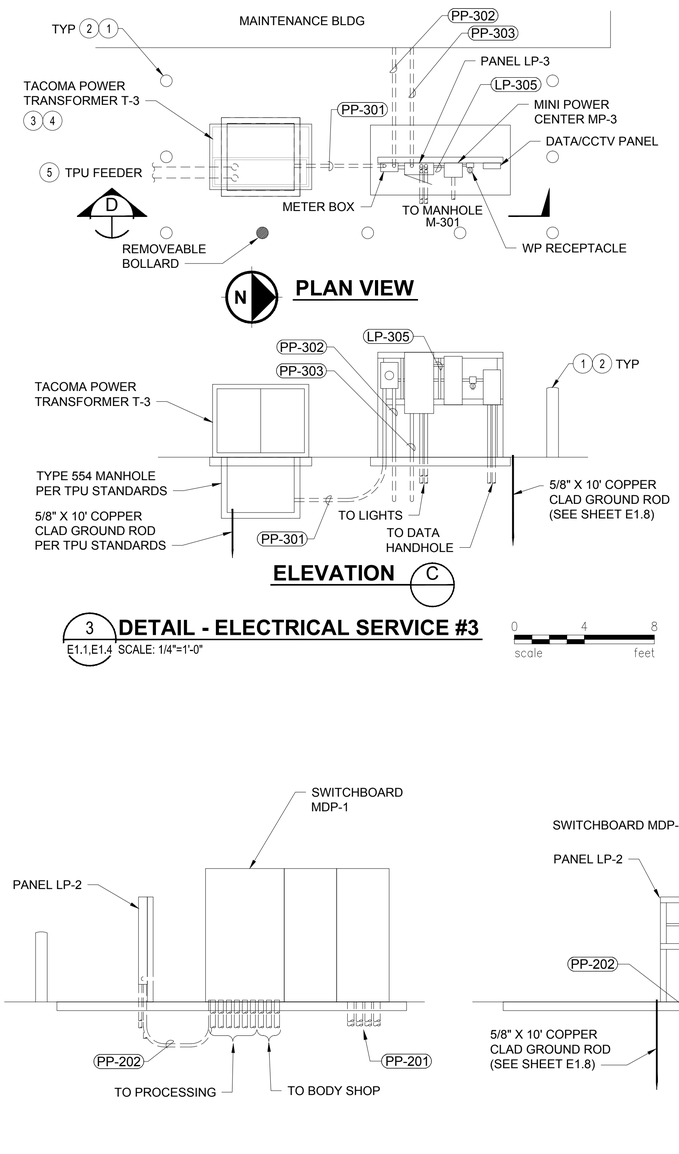

3 E1.1,E1.4 **DETAIL - ELECTRICAL SERVICE #3** SCALE: 1/4"=1'-0"

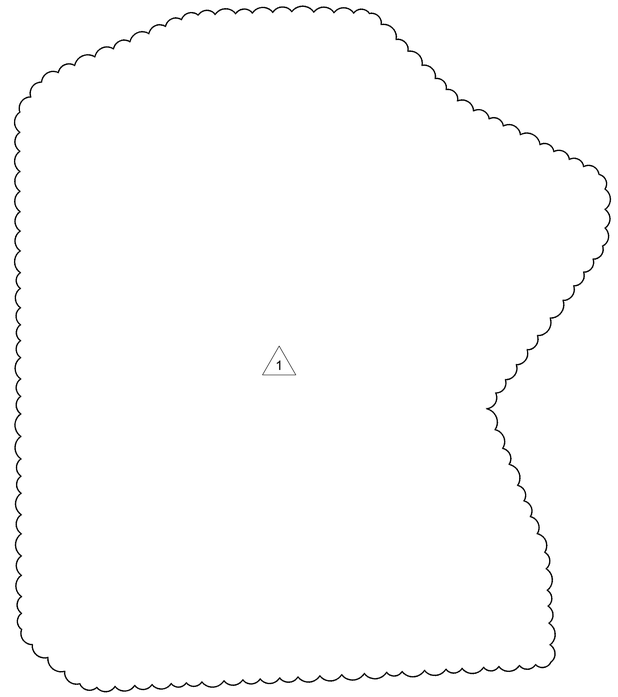

2 E1.1,E1.3 **DETAIL - ELECTRICAL SERVICE #2** SCALE: 1/4"=1'-0"

ELECTRICAL NOTES

1. REFER TO CIVIL DRAWINGS FOR BOLLARD DETAILS.
2. REFER TO CIVIL DRAWINGS FOR BOLLARD SPACING AND LOCATIONS PER TACOMA POWER STANDARDS.
3. TRANSFORMER PROVIDED AND INSTALLED BY TACOMA POWER.
4. TRANSFORMER VAULT PROVIDED AND INSTALLED BY CONTRACTOR PER TACOMA POWER SERVICE STANDARDS.
5. TACOMA POWER FEEDER CABLES PROVIDED AND INSTALLED BY TACOMA POWER. CONDUIT PROVIDED AND INSTALLED BY CONTRACTOR.

1

Port of Tacoma
P.O. BOX 1837 TACOMA, WA 98401 (253)383-5841

kpff
2407 North 31st Street, Suite 100
Tacoma, WA 98407
(253) 396-0150 Fax (253) 396-0162

MARK:	REVISION:	BY:	APPR:	DATE:
1	ADDENDUM #4	J.T.		6/5/18

DILLITHORPE, KYLE K. SATERLLIS, STATE OF WASHINGTON, REGISTERED PROFESSIONAL ENGINEER, 47800 — 5/9/18

APPROVED:

DCR	5/7/18		
CHECKED BY	DATE		
DKS	5/9/18		
DIRECTOR ENG.	DATE	PROJ. ENGR	DATE
PRINTED BY:	jeff Jun 05, 2018		
PORT ADDRESS:	ONE SITCUM PLAZA TACOMA WA, 98401-1837		

PARCEL 77 AUTO IMPORT TERMINAL

ELECTRICAL DETAILS
SERVICE POINT PLANS

TOWNSHIP: 21N	RANGE: 3E	SECTION: 36	
DAT-HRZ: W83-SF	VERT: PORT OF TACOMA BM#		
PARCEL: MULTIPLE	DRAWING SCALE: AS SHOWN		

E1.17

136 OF 163

CONT/CONS:	070770		
M. ID:	201020.01		
PHASE:	PRELIMINARY		

THIS DRAWING IS THE PROPERTY OF THE PORT OF TACOMA AND SHALL NOT BE USED ON OTHER WORK, DISCLOSED, COPIED, IN WHOLE OR IN PART, WITHOUT WRITTEN PERMISSION

PORT OF TACOMA FILE: R:\5650-077.00\Dwgs\e17

PANELBOARD LP-1	225 A BUS	SECTIONS: 1	RACK MOUNTED
480/ 277V 3 PHASE 4 WIRE	200 A MCB	LUGS: SINGLE	NEMA: 4X
LOCATION:	22k AIC	FEED: BOTTOM	NUMBER OF POLES: 42

CKT	TYPE	SERVES	C.B.	KVA	CONNECTED PHASE LOAD	KVA	C.B.	SERVES	TYPE	CKT
1		SPARE	20 / 3		5.0	15.00	30 / 3	HM-9,-10,-11	LI	2
3			---		5.0		---	HIGH MAST LIGHTS		4
5			---		5.0		---			6
7	LI	HM-12,-13	20 / 3	10.00	5.3	5.80	20 / 3	P-1,-2,-3,-4,-5,-6,-7,-8,-9	LI	8
9		HIGH MAST LIGHTS	---		5.3		---	SITE LIGHTING		10
11			---		5.3		---			12
13	LI	P-10,-11,-12,-13,-31	20 / 3	3.20	1.9	2.60	20 / 3	P-25,-26,-27,-28,-29,-30	LI	14
15		SITE LIGHTING	---		1.9		---	SITE LIGHTING		16
17			---		1.9		---			18
19		SPARE	20 / 3		1.9	5.80	25 / 3	HM-9,-10,-11 POLE MTD RCPT	SF	20
21			---		1.9		---	MINI PWR ZONES, 3@5kVA		22
23			---		1.9		---	480V-120/240V, 1PH		24
25	SF	P-10,-12 POLE MTD RCPT	20 / 3	3.80	2.5	3.80	20 / 3	HM-12,-13 POLE MTD RCPT	SF	26
27		MINI PWR ZONES, 2@5kVA	---		2.5		---	MINI PWR ZONES, 2@5kVA		28
29		480V-120/240V, 1PH	---		2.5		---	480V-120/240V, 1PH		30
31	SF	P-4,-8,-9 POLE MTD RCPT	25 / 3	5.70	3.4	3.00	20 / 2	MINI PWR ZONE, 3kVA	SF	32
33		MINI PWR ZONES, 3@5kVA	---		3.4		---	(SUBSTATION)		34
35		480V-120/240V, 1PH	---		2.0	0.18	20 / 2	MINI PWR ZONE, 5kVA	SF	36
37					0.1		---	(HOTBOX HEATERS)		38
39					0.1	0.18	20 / 2	MINI PWR ZONE, 5kVA	SF	40
41					0.1		---	(HOTBOX HEATERS)		42

9	(21.4%)	SPARES/SPACES	20.2	20.2	18.7	CALCULATED LOAD	68.2 KVA
			4.8%	IMBALANCE		MAXIMUM AMPS PER PHASE	83.8 AMPS

PANELBOARD LP-2	225 A BUS	SECTIONS: 1	RACK MOUNTED
480/ 277V 3 PHASE 4 WIRE	200 A MCB	LUGS: SINGLE	NEMA: 4X
LOCATION: CENTRAL COMPLEX	22k AIC	FEED: BOTTOM	NUMBER OF POLES: 42

CKT	TYPE	SERVES	C.B.	KVA	CONNECTED PHASE LOAD	KVA	C.B.	SERVES	TYPE	CKT
1	LI	HM-1,-2	20 / 3	10.00	6.7	10.00	20 / 3	HM-3,-4	LI	2
3		HIGH MAST LIGHTS	---		6.7		---	HIGH MAST LIGHTS		4
5			---		6.7		---			6
7	LI	P-14,-15,-16,-17,-18,-19,-35	20 / 3	4.30	2.3	2.60	20 / 3	P-32,-33,-34,-36,-37,-38	LI	8
9		SITE LIGHTING	---		2.3		---	SITE LIGHTING		10
11			---		2.3		---			12
13	LI	HM-5,-6	20 / 3	10.00	5.6	6.82	50 / 3	GUARD HOUSE (NE)	SF	14
15		HIGH MAST LIGHTS	---		5.6		---	TRANSFORMER 30KVA		16
17			---		5.6		---			18
19	SF	P-14,-19 POLE MTD RCPT	20 / 3	3.80	2.5	3.80	20 / 3	HM-1,-2 POLE MTD RCPT	SF	20
21		MINI PWR ZONES, 2@5kVA	---		2.5		---	MINI PWR ZONES, 2@5kVA		22
23		480V-120/240V, 1PH	---		2.5		---	480V-120/240V, 1PH		24
25	SF	HM-3,-4 POLE MTD RCPT	20 / 3	3.80	2.5	3.80	20 / 3	HM-5,-6 POLE MTD RCPT	SF	26
27		MINI PWR ZONES, 2@5kVA	---		2.5		---	MINI PWR ZONES, 2@5kVA		28
29		480V-120/240V, 1PH	---		2.5		---	480V-120/240V, 1PH		30
31	SF	MINI PWR ZONE, 3kVA	20 / 2	3.00	1.5					32
33		(SUBSTATION)	---		1.5					34
35	LI	PEDESTRIAN LIGHTS	20 1	0.47	0.5					36
37	LI	PEDESTRIAN LIGHTS	20 / 1	0.47	0.5					38
39	LI	PEDESTRIAN LIGHTS	20 / 1	0.47	0.5					40
41					0.0					42

7	(16.7%)	SPARES/SPACES	21.6	21.6	20.1	CALCULATED LOAD	72.9 KVA
			4.7%	IMBALANCE		MAXIMUM AMPS PER PHASE	89.5 AMPS

PANELBOARD LP-3	225 A BUS	SECTIONS: 1	RACK MOUNTED
480/ 277V 3 PHASE 4 WIRE	100 A MCB	LUGS: SINGLE	NEMA: 4X
LOCATION: SW CORNER	22k AIC	FEED: BOTTOM	NUMBER OF POLES: 30

CKT	TYPE	SERVES	C.B.	KVA	CONNECTED PHASE LOAD	KVA	C.B.	SERVES	TYPE	CKT
1	LI	HM-7,-8	20 / 3	10.00	4.4	3.23	20 / 3	P-20,-21,-22,-23,-24,-39	LI	2
3		HIGH MAST LIGHTS	---		4.4		---	SITE LIGHTING		4
5			---		4.4		---			6
7	SF	HM-7,-8 POLE MTD RCPT	20 / 3	3.80	1.9	1.90	20 / 3	P-23 POLE MTD RCPT	SF	8
9		MINI PWR ZONES, 2@5kVA	---		1.9		---	MINI PWR ZONE, 5kVA		10
11		480V-120/240V, 1PH	---		1.9		---	480V-120/240V, 1PH		12
13	SF	MINI POWER ZONE, 3kVA	20 / 2	3.00	1.5					14
15		(SUBSTATION)	---		1.5					16
17					0.0					18
19					0.0					20
21					0.0					22
23					0.0					24
25					0.0					26
27					0.0					28
29					0.0					30

16	(53.3%)	SPARES/SPACES	7.8	7.8	6.3	CALCULATED LOAD	25.2 KVA
			13.7%	IMBALANCE		MAXIMUM AMPS PER PHASE	32.2 AMPS

1

Port of Tacoma
P.O. BOX 1837 TACOMA, WA 98401 (253)383-5841

kpff
2407 North 31st Street, Suite 100
Tacoma, WA 98407
(253) 396-0150 Fax (253) 396-0162

MARK:	REVISION:	BY:	APPR:	DATE:
1	ADDENDUM #4	J.T.		6/5/18

DILLITHORPE, SUSAN K. STATE OF WASHINGTON REGISTERED PROFESSIONAL ENGINEER 5/9/18

APPROVED:

DIRECTOR ENG.	DATE	
CHECKED BY	DATE	DCR 5/7/18
PRINTED BY: jeff Jun 05, 2018	PROJ. ENGR	DKS 5/9/18
PORT ADDRESS: ONE SITCUM PLAZA TACOMA WA, 98401-1837		

PARCEL 77 AUTO IMPORT TERMINAL

ELECTRICAL
PANEL SCHEDULES

CONT/CONS: 070770	TOWNSHIP: 21N	RANGE: 3E	SECTION: 36
M. ID: 201020.01	DAT–HRZ: W83-SF	VERT: PORT OF TACOMA BM#	
PHASE: PRELIMINARY	PARCEL: MULTIPLE	DRAWING SCALE: AS SHOWN	

E1.22

141 OF 163

THIS DRAWING IS THE PROPERTY OF THE PORT OF TACOMA AND SHALL NOT BE USED ON OTHER WORK, DISCLOSED, COPIED, IN WHOLE OR IN PART, WITHOUT WRITTEN PERMISSION

BINDING EDGE

PORT OF TACOMA FILE: R:\5650-077.00\Dwgs\e22