Attachment E

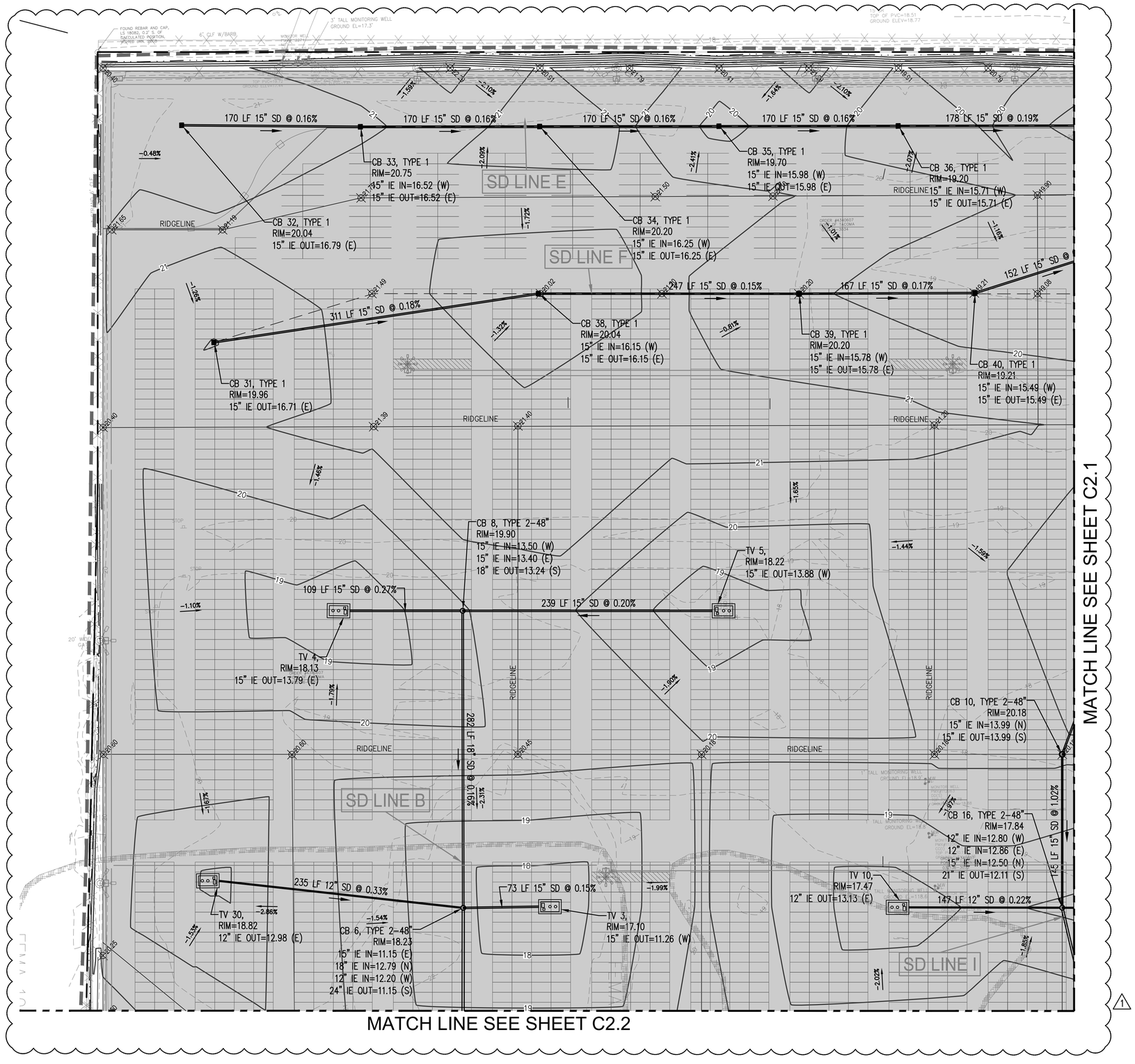

GRADING AND DRAINAGE NOTES

1. PAVEMENT EDGE, SEE 3/C3.7
2. OUTFALL PROTECTION, SEE 1/C2.25
3. CONSTRUCT CULVERT PROTECTION SLAB PER 2/C1.16

NOTES

1. REFER TO SHEETS D1.0 THRU D1.6 FOR AREAS OF KNOWN REMNANT CONTAMINATION, AREAS OF REMEDIATED CONTAMINATION, AND APPROXIMATE LOCATION OF BURIED CONCRETE FOUNDATIONS.
2. PROPOSED CONTOURS REPRESENT TOP OF PAVEMENT IN PAVED AREAS.
3. STRAIGHT GRADE SHALL BE MAINTAINED BETWEEN CONTOUR LINES AND SPOT ELEVATIONS UNLESS OTHERWISE SHOWN ON THE PLANS.
4. ALL FILL SOILS OR SOILS DISTURBED OR OVEREXCAVATED DURING CONSTRUCTION SHALL BE COMPACTED IN ACCORDANCE WITH THE SPECIFICATIONS.
5. STORM DRAIN PIPE SHALL BE CORRUGATED POLYETHYLENE PIPE, UNLESS OTHERWISE NOTED. REFER TO STORM DRAIN PROFILE SHEETS C2.9 THRU C2.20 FOR PIPE MATERIALS. PIPES CONNECTED TO TREATMENT VAULTS, FLOWING IN OR OUT, SHALL BE PVC.
6. ALL CATCH BASIN TYPE 1/1L STRUCTURES SHALL BE CONSTRUCTED PER WSDOT STD PLAN B-5.20-01.
7. TYPE 1/1L CATCH BASINS SHALL HAVE A RECTANGULAR BI-DIRECTIONAL VANED GRATE PER WSDOT STD PLAN B-30.40-01
8. ALL CATCH BASIN TYPE 2 STRUCTURES SHALL BE CONSTRUCTED PER WSDOT STD PLAN B-10.20-01 AND 2/C2.21
9. ALL PIPE MATERIALS, JOINTS, AND PROTECTIVE TREATMENTS SHALL BE IN ACCORDANCE WITH SECTION 9.05 OF THE 2018 WSDOT STANDARD SPECIFICATIONS.
10. ALL CATCH BASIN, MANHOLE AND TREATMENT VAULT BLOCKOUTS SHALL BE FITTED WITH PRECAST COMPRESSSION GASKET CONNECTION OR FLEXIBLE BOOT CONNECTION. SEE SHEET C2.6, NOTE 6.
11. PROVIDE CLEANOUT ON UPSTREAM END OF ALL SUBDRAIN AND ALL TIGHTLINE PIPES, AND MIDWAY ALONG SUBDRAIN AND ALL TIGHTLINE PIPES GREATER THAN 300 FEET LONG. REFER TO 3/C2.21 AND 5/C2.21
12. REFER TO SHEETS U1.0 THRU U1.5 FOR UTILITIES.
13. FOR TYPICAL TRACK SUBDRAIN INSTALLATION, REFER TO 3/C2.27
14. REFER TO SHEET C2.6, STORM DRAINAGE GENERAL NOTE 10 FOR CONDITIONS OF ALLOWABLE TEMPORARY STORMWATER DISCHARGE TO EXISTING STORMWATER POND ADJACENT TO TAYLOR WAY.

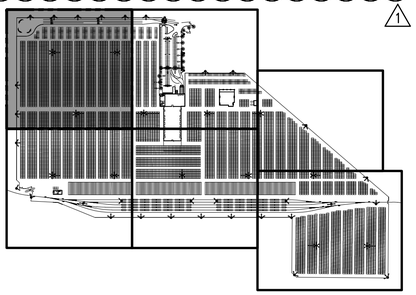

KEY PLAN
NTS

SCALE IN FEET: 0 50 100 150

Port of Tacoma
P.O. BOX 1837 TACOMA, WA 98401 (253)383-5841

kpff
2407 North 31st Street, Suite 100
Tacoma, Washington 98407
(253) 396-0150 Fax (253) 396-0162

MARK:	REVISION:	BY:	APPR:	DATE:
1	ADDENDUM #4	CMB		6/5

MADE KING COUNTY, WASHINGTON
NICHOLAS A. SIMONS
32791
REGISTERED PROFESSIONAL ENGINEER
5/9/18

CMB	5/7/2018	CHECKED BY DATE
SWK	5/9/2018	PROJ. ENGR DATE
Hemons	Jun 06, 2018	PRINTED BY:

APPROVED:
DIRECTOR, ENG. DATE

PORT ADDRESS: ONE SITCUM PLAZA TACOMA WA, 98401-1837

PARCEL 77 AUTO IMPORT TERMINAL

GRADING & DRAINAGE
AREA 1

TOWNSHIP: 21N	RANGE: 3E	SECTION: 36	
DAT-HRZ: W83-SF	VERT: PORT OF TACOMA BM#		
PARCEL: MULTIPLE	DRAWING SCALE: AS SHOWN		

C2.0
50 OF 163

CONT/CONS:	070770
M. ID:	201020.01
PHASE:	BID SET

THIS DRAWING IS THE PROPERTY OF THE PORT OF TACOMA AND SHALL NOT BE USED ON OTHER WORK, DISCLOSED, COPIED, IN WHOLE OR IN PART, WITHOUT WRITTEN PERMISSION

BINDING EDGE

PORT OF TACOMA FILE: N:\2017\1700082 Automobile Import Terminal Planning\Part 3 - KPFF Design\3.13 Drawings\Current\30pc Design\C2.0-C2.5 GRADING DRAINAGE AND UTILITY PLANS

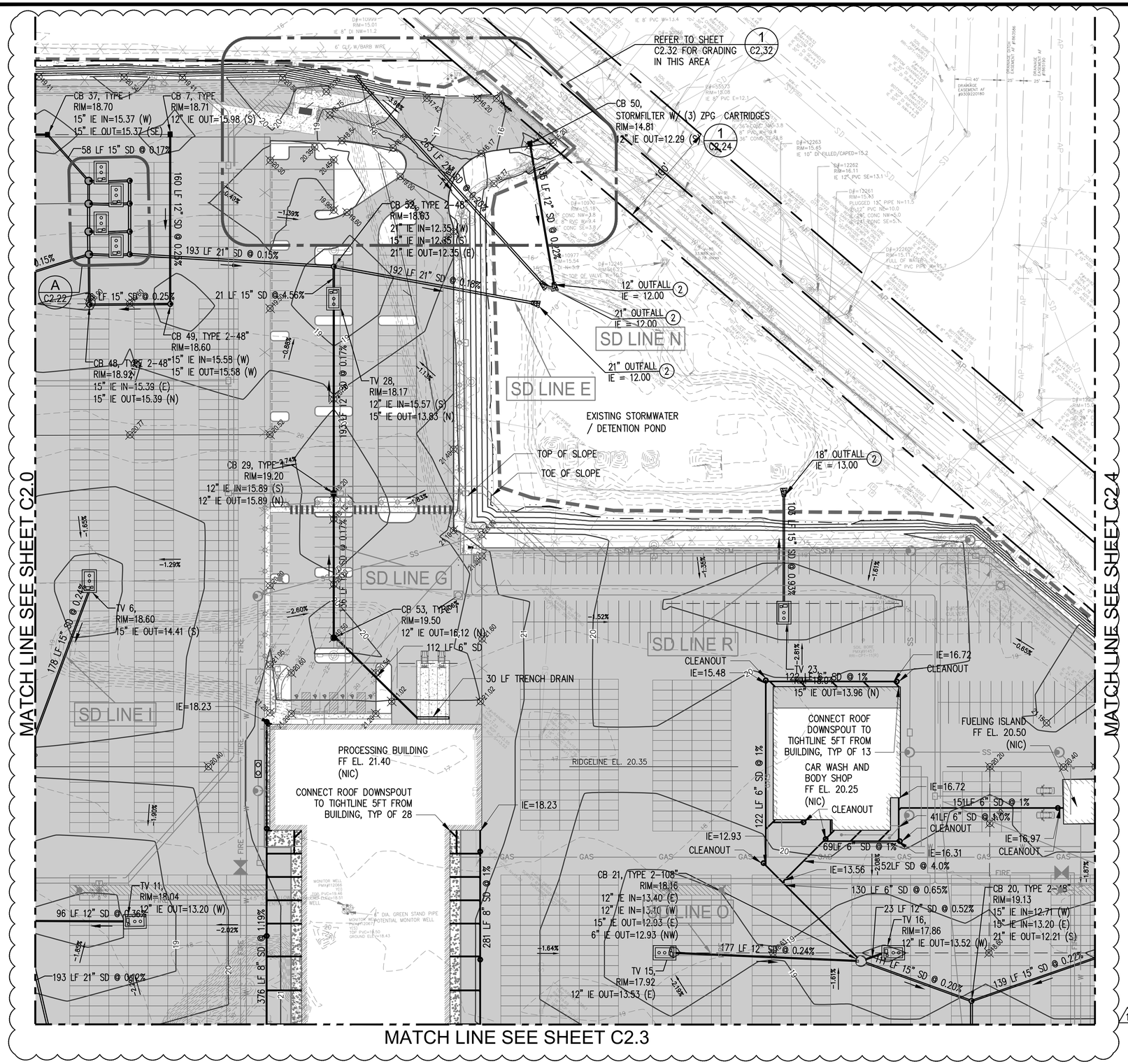

GRADING AND DRAINAGE NOTES

1. PAVEMENT EDGE, SEE 3 / C3.7
2. OUTFALL PROTECTION, SEE 1 / C2.25
3. CONSTRUCT CULVERT PROTECTION SLAB PER 2 / C1.16

NOTES

1. REFER TO SHEETS D1.0 THRU D1.6 FOR AREAS OF KNOWN REMNANT CONTAMINATION, AREAS OF REMEDIATED CONTAMINATION, AND APPROXIMATE LOCATION OF BURIED CONCRETE FOUNDATIONS.
2. PROPOSED CONTOURS REPRESENT TOP OF PAVEMENT IN PAVED AREAS.
3. STRAIGHT GRADE SHALL BE MAINTAINED BETWEEN CONTOUR LINES AND SPOT ELEVATIONS UNLESS OTHERWISE SHOWN ON THE PLANS.
4. ALL FILL SOILS OR SOILS DISTURBED OR OVEREXCAVATED DURING CONSTRUCTION SHALL BE COMPACTED IN ACCORDANCE WITH THE SPECIFICATIONS.
5. STORM DRAIN PIPE SHALL BE CORRUGATED POLYETHYLENE PIPE, UNLESS OTHERWISE NOTED. REFER TO STORM DRAIN PROFILE SHEETS C2.9 THRU C2.20 FOR PIPE MATERIALS. PIPES CONNECTED TO TREATMENT VAULTS, FLOWING IN OR OUT, SHALL BE PVC.
6. ALL CATCH BASIN TYPE 1/1L STRUCTURES SHALL BE CONSTRUCTED PER WSDOT STD PLAN B-5.20-01.
7. TYPE 1/1L CATCH BASINS SHALL HAVE A RECTANGULAR BI-DIRECTIONAL VANED GRATE PER WSDOT STD PLAN B-30.40-01
8. ALL CATCH BASIN TYPE 2 STRUCTURES SHALL BE CONSTRUCTED PER WSDOT STD PLAN B-10.20-01 AND 2 / C2.21
9. ALL PIPE MATERIALS, JOINTS, AND PROTECTIVE TREATMENTS SHALL BE IN ACCORDANCE WITH SECTION 9.05 OF THE 2018 WSDOT STANDARD SPECIFICATIONS. 1
10. ALL CATCH BASIN, MANHOLE AND TREATMENT VAULT BLOCKOUTS SHALL BE FITTED WITH PRECAST COMPRESSSION GASKET CONNECTION OR FLEXIBLE BOOT CONNECTION. SEE SHEET C2.6, NOTE 6.
11. PROVIDE CLEANOUT ON UPSTREAM END OF ALL SUBDRAIN AND ALL TIGHTLINE PIPES, AND MIDWAY ALONG SUBDRAIN AND ALL TIGHTLINE PIPES GREATER THAN 300 FEET LONG. REFER TO 3 / C2.21 AND 5 / C2.21
12. REFER TO SHEETS U1.0 THRU U1.5 FOR UTILITIES.
13. FOR TYPICAL TRACK SUBDRAIN INSTALLATION, REFER TO 3 / C2.27
14. REFER TO SHEET C2.6, STORM DRAINAGE GENERAL NOTE 10 FOR CONDITIONS OF ALLOWABLE TEMPORARY STORMWATER DISCHARGE TO EXISTING STORMWATER POND ADJACENT TO TAYLOR WAY. 1

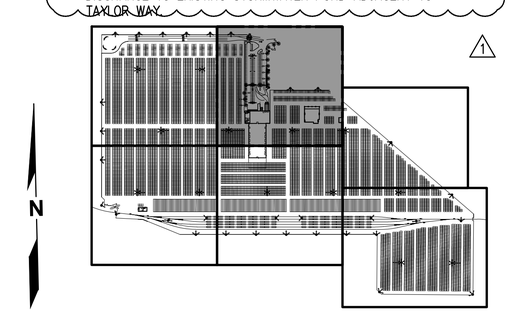

KEY PLAN
NTS

0 50 100 150
SCALE IN FEET

Port of Tacoma
P.O. BOX 1837 TACOMA, WASHINGTON 98401 (253)383-5841

kpff
2407 North 31st Street, Suite 100
Tacoma, Washington 98407
(253) 396-0150 Fax (253) 396-0162

MARK:	REVISION:	BY:	APPR:	DATE:
1	ADDENDUM #4	CMB		6/5

MADE KING SUNG KEY
STATE OF WASHINGTON
32131
PROFESSIONAL ENGINEER
5/9/18

APPROVED:

CMB	5/7/2018	CHECKED BY DATE
SWK	5/9/2018	PRINTED BY: thernons Jun 06, 2018
		DIRECTOR ENG. DATE
		PORT ADDRESS: ONE SITCUM PLAZA TACOMA WA, 98401-1837

PARCEL 77 AUTO IMPORT TERMINAL

GRADING & DRAINAGE AREA 2

TOWNSHIP: 21N	RANGE: 3E	SECTION: 36	
DAT-HRZ: W83-SF	VERT: PORT OF TACOMA BM#		
PARCEL: MULTIPLE	DRAWING SCALE: AS SHOWN		

C2.1

51 OF 163

CONT/CONS:	070770
M. ID:	201020.01
PHASE:	BID SET

THIS DRAWING IS THE PROPERTY OF THE PORT OF TACOMA AND SHALL NOT BE USED ON OTHER WORK, DISCLOSED, COPIED, IN WHOLE OR IN PART, WITHOUT WRITTEN PERMISSION

PORT OF TACOMA FILE: N:\2017\1700082 Automobile Import Terminal Planning\Part 3 - KPFF Design\3.13 Drawings\Current\30pc Design\C2.0-C2.5 GRADING DRAINAGE AND UTILITY PLANS
BINDING EDGE

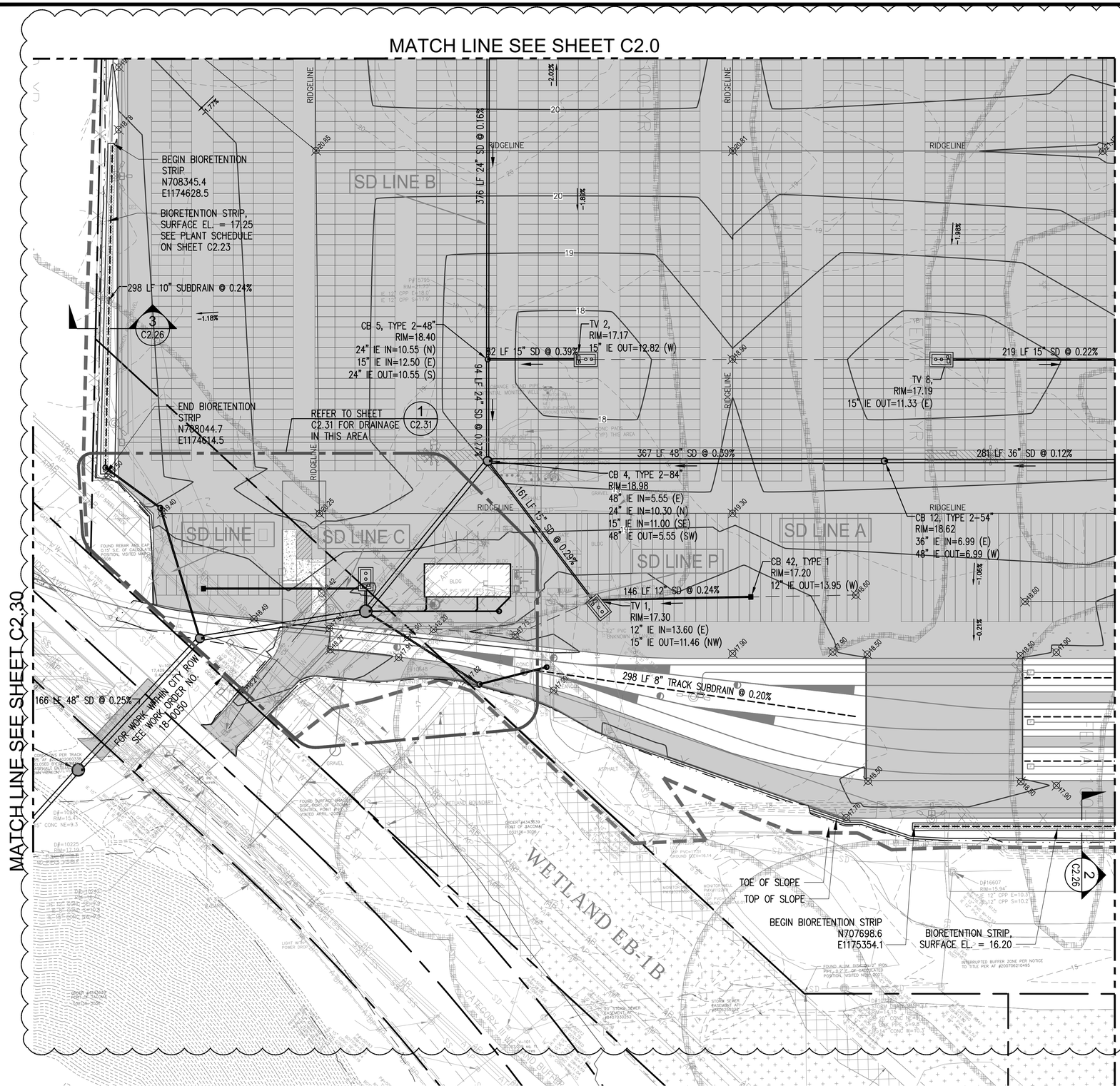

GRADING AND DRAINAGE NOTES

1. PAVEMENT EDGE, SEE 3/C3.7
2. OUTFALL PROTECTION, SEE 1/C2.25
3. CONSTRUCT CULVERT PROTECTION SLAB PER 2/C1.16

NOTES

1. REFER TO SHEETS D1.0 THRU D1.6 FOR AREAS OF KNOWN REMNANT CONTAMINATION, AREAS OF REMEDIATED CONTAMINATION, AND APPROXIMATE LOCATION OF BURIED CONCRETE FOUNDATIONS.
2. PROPOSED CONTOURS REPRESENT TOP OF PAVEMENT IN PAVED AREAS.
3. STRAIGHT GRADE SHALL BE MAINTAINED BETWEEN CONTOUR LINES AND SPOT ELEVATIONS UNLESS OTHERWISE SHOWN ON THE PLANS.
4. ALL FILL SOILS OR SOILS DISTURBED OR OVEREXCAVATED DURING CONSTRUCTION SHALL BE COMPACTED IN ACCORDANCE WITH THE SPECIFICATIONS.
5. STORM DRAIN PIPE SHALL BE CORRUGATED POLYETHYLENE PIPE, UNLESS OTHERWISE NOTED. REFER TO STORM DRAIN PROFILE SHEETS C2.9 THRU C2.20 FOR PIPE MATERIALS. PIPES CONNECTED TO TREATMENT VAULTS, FLOWING IN OR OUT, SHALL BE PVC.
6. ALL CATCH BASIN TYPE 1/1L STRUCTURES SHALL BE CONSTRUCTED PER WSDOT STD PLAN B-5.20-01.
7. TYPE 1/1L CATCH BASINS SHALL HAVE A RECTANGULAR BI-DIRECTIONAL VANED GRATE PER WSDOT STD PLAN B-30.40-01
8. ALL CATCH BASIN TYPE 2 STRUCTURES SHALL BE CONSTRUCTED PER WSDOT STD PLAN B-10.20-01 AND 2/C2.21
9. ALL PIPE MATERIALS, JOINTS, AND PROTECTIVE TREATMENTS SHALL BE IN ACCORDANCE WITH SECTION 9.05 OF THE 2018 WSDOT STANDARD SPECIFICATIONS.
10. ALL CATCH BASIN, MANHOLE AND TREATMENT VAULT BLOCKOUTS SHALL BE FITTED WITH PRECAST COMPRESSSION GASKET CONNECTION OR FLEXIBLE BOOT CONNECTION. SEE SHEET C2.6, NOTE 6.
11. PROVIDE CLEANOUT ON UPSTREAM END OF ALL SUBDRAIN AND ALL TIGHTLINE PIPES, AND MIDWAY ALONG SUBDRAIN AND ALL TIGHTLINE PIPES GREATER THAN 300 FEET LONG. REFER TO 3/C2.21 AND 5/C2.21
12. REFER TO SHEETS U1.0 THRU U1.5 FOR UTILITIES.
13. FOR TYPICAL TRACK SUBDRAIN INSTALLATION, REFER TO 3/C2.27
14. REFER TO SHEET C2.6, STORM DRAINAGE GENERAL NOTE 10 FOR CONDITIONS OF ALLOWABLE TEMPORARY STORMWATER DISCHARGE TO EXISTING STORMWATER POND ADJACENT TO TAYLOR WAY.

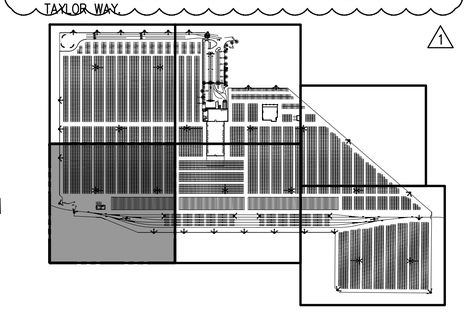

KEY PLAN
NTS

Port of Tacoma
P.O. BOX 1837 TACOMA, WA 98401 (253)383-5841

kpff
2407 North 31st Street, Suite 100
Tacoma, Washington 98407
(253) 396-0150 Fax (253) 396-0162

MARK:	REVISION:	BY:	APPR:	DATE:
1	ADDENDUM #4	CMB		6/5

MADE KNOWN TO WASHINGTON NATIONAL ENGINEERING PROFESSIONAL DATA 32131 5/9/18

CMB	5/7/2018	
CHECKED BY		DATE
SWK	5/9/2018	
PROJ. ENGR		DATE
PRINTED BY: Ulemons Jun 06, 2018		
PORT ADDRESS: ONE SITCUM PLAZA		
TACOMA WA, 98401-1837		

APPROVED:

DIRECTOR ENG. DATE

PARCEL 77 AUTO IMPORT TERMINAL

GRADING & DRAINAGE
AREA 3

TOWNSHIP: 21N	RANGE: 3E	SECTION: 36	
DAT-HRZ: W83-SF	VERT: PORT OF TACOMA BM#		
PARCEL: MULTIPLE	DRAWING SCALE: AS SHOWN		

C2.2
52 OF 163

CONT/CONS:	070770
M. ID:	201020.01
PHASE:	BID SET

THIS DRAWING IS THE PROPERTY OF THE PORT OF TACOMA AND SHALL NOT BE USED ON OTHER WORK, DISCLOSED, COPIED, IN WHOLE OR IN PART, WITHOUT WRITTEN PERMISSION

PORT OF TACOMA FILE: N:\2017\1700082 Automobile Import Terminal Planning\Part 3 - KPFF Design\3.13 Drawings\Current\30pc Design\C2.0-C2.5 GRADING DRAINAGE AND UTILITY PLANS

BINDING EDGE

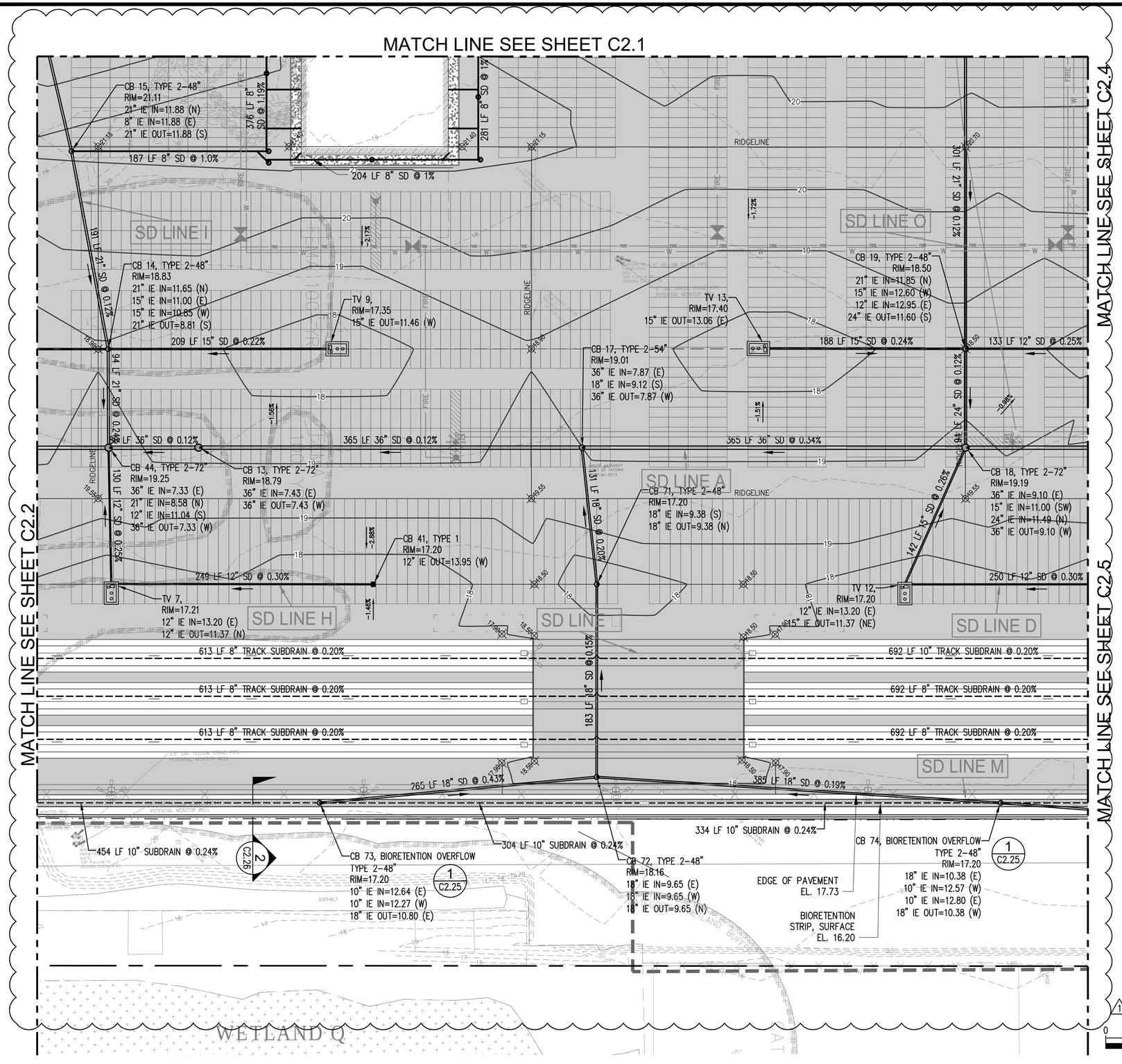

GRADING AND DRAINAGE NOTES

1. PAVEMENT EDGE, SEE 3/C3.7
2. OUTFALL PROTECTION, SEE 1/C2.25
3. CONSTRUCT CULVERT PROTECTION SLAB PER 2/C1.16

NOTES

1. REFER TO SHEETS D1.0 THRU D1.6 FOR AREAS OF KNOWN REMNANT CONTAMINATION, AREAS OF REMEDIATED CONTAMINATION, AND APPROXIMATE LOCATION OF BURIED CONCRETE FOUNDATIONS.
2. PROPOSED CONTOURS REPRESENT TOP OF PAVEMENT IN PAVED AREAS.
3. STRAIGHT GRADE SHALL BE MAINTAINED BETWEEN CONTOUR LINES AND SPOT ELEVATIONS UNLESS OTHERWISE SHOWN ON THE PLANS.
4. ALL FILL SOILS OR SOILS DISTURBED OR OVEREXCAVATED DURING CONSTRUCTION SHALL BE COMPACTED IN ACCORDANCE WITH THE SPECIFICATIONS.
5. STORM DRAIN PIPE SHALL BE CORRUGATED POLYETHYLENE PIPE, UNLESS OTHERWISE NOTED. REFER TO STORM DRAIN PROFILE SHEETS C2.9 THRU C2.20 FOR PIPE MATERIALS. PIPES CONNECTED TO TREATMENT VAULTS, FLOWING IN OR OUT, SHALL BE PVC.
6. ALL CATCH BASIN TYPE 1/1L STRUCTURES SHALL BE CONSTRUCTED PER WSDOT STD PLAN B-5.20-01.
7. TYPE 1/1L CATCH BASINS SHALL HAVE A RECTANGULAR BI-DIRECTIONAL VANED GRATE PER WSDOT STD PLAN B-30.40-01
8. ALL CATCH BASIN TYPE 2 STRUCTURES SHALL BE CONSTRUCTED PER WSDOT STD PLAN B-10.20-01 AND 2/C2.21
9. ALL PIPE MATERIALS, JOINTS, AND PROTECTIVE TREATMENTS SHALL BE IN ACCORDANCE WITH SECTION 9.05 OF THE 2018 WSDOT STANDARD SPECIFICATIONS. 1
10. ALL CATCH BASIN, MANHOLE AND TREATMENT VAULT BLOCKOUTS SHALL BE FITTED WITH PRECAST COMPRESSSION GASKET CONNECTION OR FLEXIBLE BOOT CONNECTION. SEE SHEET C2.6, NOTE 6.
11. PROVIDE CLEANOUT ON UPSTREAM END OF ALL SUBDRAIN AND ALL TIGHTLINE PIPES, AND MIDWAY ALONG SUBDRAIN AND ALL TIGHTLINE PIPES GREATER THAN 300 FEET LONG. REFER TO 3/C2.21 AND 5/C2.21
12. REFER TO SHEETS U1.0 THRU U1.5 FOR UTILITIES.
13. FOR TYPICAL TRACK SUBDRAIN INSTALLATION, REFER TO 3/C2.27
14. REFER TO SHEET C2.6, STORM DRAINAGE GENERAL NOTE 10 FOR CONDITIONS OF ALLOWABLE TEMPORARY STORMWATER DISCHARGE TO EXISTING STORMWATER POND ADJACENT TO TAYLOR WAY. 1

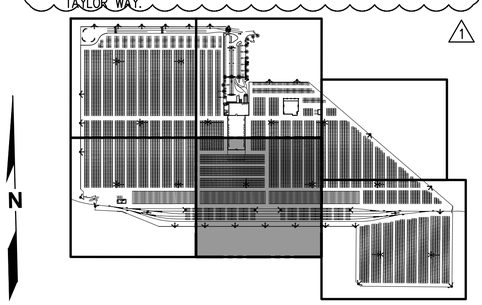

KEY PLAN
NTS

Port of Tacoma
P.O. BOX 1837 TACOMA, WA 98401 (253)383-5841

kpff
2407 North 31st Street, Suite 100
Tacoma, Washington 98407
(253) 396-0150 Fax (253) 396-0162

MARK:	REVISION:	BY:	APPR:	DATE:
1	ADDENDUM #4	CMB		6/5

MADE KING COUNTY, WASHINGTON
STATE OF WASHINGTON
32791
REGISTERED PROFESSIONAL ENGINEER
5/9/18

CMB	5/7/2018	CHECKED BY DATE
SWK	5/9/2018	PROJ. ENGR DATE
Hemons Jun 06, 2018		PRINTED BY: DIRECTOR ENG. DATE

APPROVED:

PARCEL 77 AUTO IMPORT TERMINAL

GRADING & DRAINAGE
AREA 4

TOWNSHIP: 21N	RANGE: 3E	SECTION: 36	PORT ADDRESS: ONE SITCUM PLAZA TACOMA WA, 98401-1837
DAT-HRZ: W83-SF	VERT: PORT OF TACOMA BM#		
PARCEL: MULTIPLE	DRAWING SCALE: AS SHOWN		

C2.3
53 OF 163

CONT/CONS:	070770
M. ID:	201020.01
PHASE:	BID SET

THIS DRAWING IS THE PROPERTY OF THE PORT OF TACOMA AND SHALL NOT BE USED ON OTHER WORK, DISCLOSED, COPIED, IN WHOLE OR IN PART, WITHOUT WRITTEN PERMISSION

BINDING EDGE
PORT OF TACOMA FILE: N:\2017\1700082 Automobile Import Terminal Planning\Part 3 - KPFF Design\3.13 Drawings\Current\30pc Design\C2.0-C2.5 GRADING DRAINAGE AND UTILITY PLANS

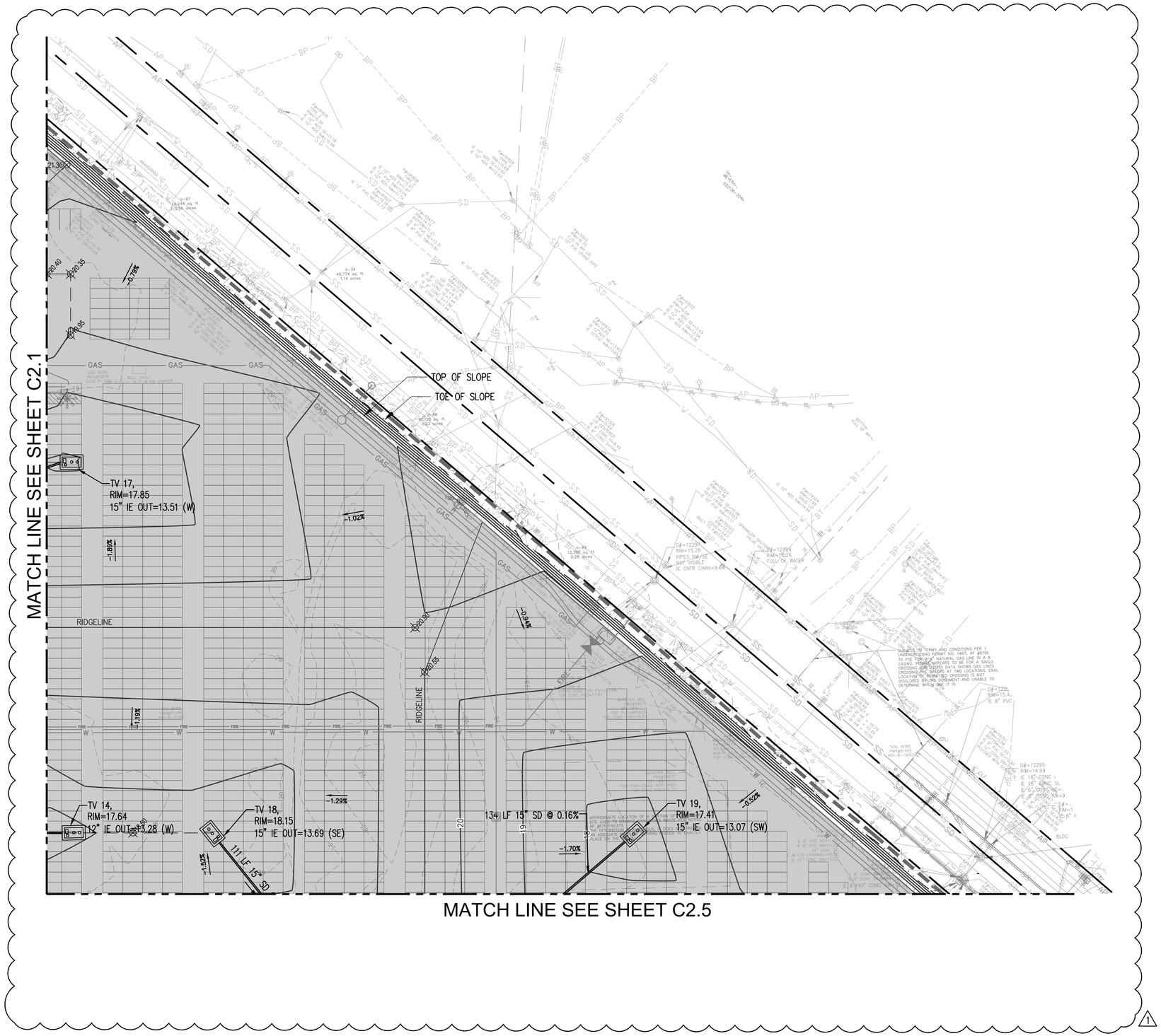

GRADING AND DRAINAGE NOTES

1. PAVEMENT EDGE, SEE 3/C3.7
2. OUTFALL PROTECTION, SEE 1/C2.25
3. CONSTRUCT CULVERT PROTECTION SLAB PER 2/C1.16

NOTES

1. REFER TO SHEETS D1.0 THRU D1.6 FOR AREAS OF KNOWN REMNANT CONTAMINATION, AREAS OF REMEDIATED CONTAMINATION, AND APPROXIMATE LOCATION OF BURIED CONCRETE FOUNDATIONS.
2. PROPOSED CONTOURS REPRESENT TOP OF PAVEMENT IN PAVED AREAS.
3. STRAIGHT GRADE SHALL BE MAINTAINED BETWEEN CONTOUR LINES AND SPOT ELEVATIONS UNLESS OTHERWISE SHOWN ON THE PLANS.
4. ALL FILL SOILS OR SOILS DISTURBED OR OVEREXCAVATED DURING CONSTRUCTION SHALL BE COMPACTED IN ACCORDANCE WITH THE SPECIFICATIONS.
5. STORM DRAIN PIPE SHALL BE CORRUGATED POLYETHYLENE PIPE, UNLESS OTHERWISE NOTED. REFER TO STORM DRAIN PROFILE SHEETS C2.9 THRU C2.20 FOR PIPE MATERIALS. PIPES CONNECTED TO TREATMENT VAULTS, FLOWING IN OR OUT, SHALL BE PVC.
6. ALL CATCH BASIN TYPE 1/1L STRUCTURES SHALL BE CONSTRUCTED PER WSDOT STD PLAN B-5.20-01.
7. TYPE 1/1L CATCH BASINS SHALL HAVE A RECTANGULAR BI-DIRECTIONAL VANED GRATE PER WSDOT STD PLAN B-30.40-01
8. ALL CATCH BASIN TYPE 2 STRUCTURES SHALL BE CONSTRUCTED PER WSDOT STD PLAN B-10.20-01 AND 2/C2.21
9. ALL PIPE MATERIALS, JOINTS, AND PROTECTIVE TREATMENTS SHALL BE IN ACCORDANCE WITH SECTION 9.05 OF THE 2018 WSDOT STANDARD SPECIFICATIONS. 1
10. ALL CATCH BASIN, MANHOLE AND TREATMENT VAULT BLOCKOUTS SHALL BE FITTED WITH PRECAST COMPRESSSION GASKET CONNECTION OR FLEXIBLE BOOT CONNECTION. SEE SHEET C2.6, NOTE 6.
11. PROVIDE CLEANOUT ON UPSTREAM END OF ALL SUBDRAIN AND ALL TIGHTLINE PIPES, AND MIDWAY ALONG SUBDRAIN AND ALL TIGHTLINE PIPES GREATER THAN 300 FEET LONG. REFER TO 3/C2.21 AND 5/C2.21
12. REFER TO SHEETS U1.0 THRU U1.5 FOR UTILITIES.
13. FOR TYPICAL TRACK SUBDRAIN INSTALLATION, REFER TO 3/C2.27
14. REFER TO SHEET C2.6, STORM DRAINAGE GENERAL NOTE 10 FOR CONDITIONS OF ALLOWABLE TEMPORARY STORMWATER DISCHARGE TO EXISTING STORMWATER POND ADJACENT TO TAYLOR WAY. 1

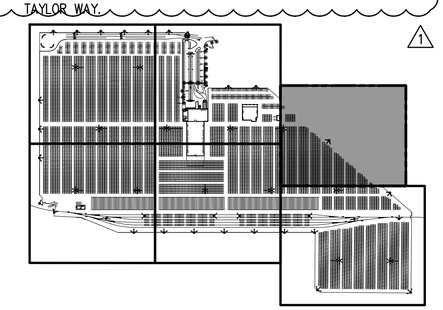

KEY PLAN
NTS

N

0 50 100 150
SCALE IN FEET

Port of Tacoma
P.O. BOX 1837 TACOMA, WA 98401 (253)383-5841

kpff
2407 North 31st Street, Suite 100
Tacoma, Washington 98407
(253) 396-0150 Fax (253) 396-0162

MARK:	REVISION:	BY:	APPR:	DATE:
1	ADDENDUM #4	CMB		6/5

MADE KNOWN TO WASHINGTON STATE BY THE SEAL OF A REGISTERED PROFESSIONAL ENGINEER 32791 5/9/18

CMB	5/7/2018	
CHECKED BY	DATE	
SWK	5/9/2018	
PROJ. ENGR	DATE	
Clemons	Jun 06, 2018	

APPROVED:
DIRECTOR ENG. DATE
PRINTED BY:
PORT ADDRESS: ONE SITCUM PLAZA TACOMA WA, 98401-1837

PARCEL 77 AUTO IMPORT TERMINAL

GRADING & DRAINAGE
AREA 5

C2.4

54 OF 163

CONT/CONS:	070770	TOWNSHIP: 21N	RANGE: 3E
M. ID:	201020.01	DAT-HRZ: W83-SF	VERT: PORT OF TACOMA BM#
PHASE:	BID SET	PARCEL: MULTIPLE	DRAWING SCALE: AS SHOWN

SECTION: 36

THIS DRAWING IS THE PROPERTY OF THE PORT OF TACOMA AND SHALL NOT BE USED ON OTHER WORK, DISCLOSED, COPIED, IN WHOLE OR IN PART, WITHOUT WRITTEN PERMISSION

PORT OF TACOMA FILE: N:\2017\1700082 Automobile Import Terminal Planning\Part 3 - KPFF Design\3.13 Drawings\Current\30pc Design\C2.0-C2.5 GRADING DRAINAGE AND UTILITY PLANS

BINDING EDGE

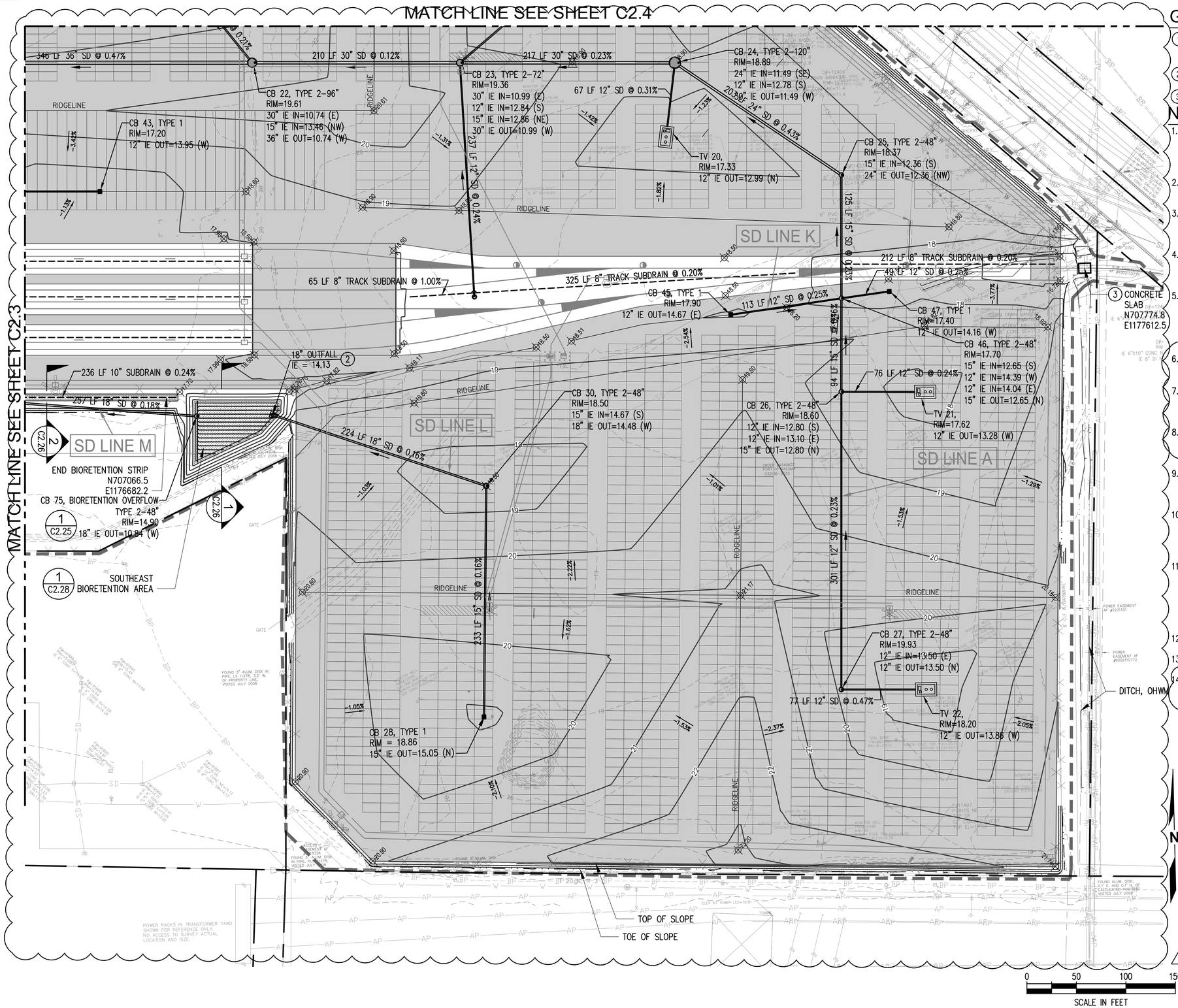

GRADING AND DRAINAGE NOTES

1. PAVEMENT EDGE, SEE 3/C3.7
2. OUTFALL PROTECTION, SEE 1/C2.25
3. CONSTRUCT CULVERT PROTECTION SLAB PER 2/C1.16

NOTES

1. REFER TO SHEETS D1.0 THRU D1.6 FOR AREAS OF KNOWN REMNANT CONTAMINATION, AREAS OF REMEDIATED CONTAMINATION, AND APPROXIMATE LOCATION OF BURIED CONCRETE FOUNDATIONS.
2. PROPOSED CONTOURS REPRESENT TOP OF PAVEMENT IN PAVED AREAS.
3. STRAIGHT GRADE SHALL BE MAINTAINED BETWEEN CONTOUR LINES AND SPOT ELEVATIONS UNLESS OTHERWISE SHOWN ON THE PLANS.
4. ALL FILL SOILS OR SOILS DISTURBED OR OVEREXCAVATED DURING CONSTRUCTION SHALL BE COMPACTED IN ACCORDANCE WITH THE SPECIFICATIONS.
5. STORM DRAIN PIPE SHALL BE CORRUGATED POLYETHYLENE PIPE, UNLESS OTHERWISE NOTED. REFER TO STORM DRAIN PROFILE SHEETS C2.9 THRU C2.20 FOR PIPE MATERIALS. PIPES CONNECTED TO TREATMENT VAULTS, FLOWING IN OR OUT, SHALL BE PVC
6. ALL CATCH BASIN TYPE 1/1L STRUCTURES SHALL BE CONSTRUCTED PER WSDOT STD PLAN B-5.20-01.
7. TYPE 1/1L CATCH BASINS SHALL HAVE A RECTANGULAR BI-DIRECTIONAL VANED GRATE PER WSDOT STD PLAN B-30.40-01
8. ALL CATCH BASIN TYPE 2 STRUCTURES SHALL BE CONSTRUCTED PER WSDOT STD PLAN B-10.20-01 AND 2/C2.21
9. ALL PIPE MATERIALS, JOINTS, AND PROTECTIVE TREATMENTS SHALL BE IN ACCORDANCE WITH SECTION 9.05 OF THE 2018 WSDOT STANDARD SPECIFICATIONS.
10. ALL CATCH BASIN, MANHOLE AND TREATMENT VAULT BLOCKOUTS SHALL BE FITTED WITH PRECAST COMPRESSSION GASKET CONNECTION OR FLEXIBLE BOOT CONNECTION. SEE SHEET C2.6, NOTE 6.
11. PROVIDE CLEANOUT ON UPSTREAM END OF ALL SUBDRAIN AND ALL TIGHTLINE PIPES, AND MIDWAY ALONG SUBDRAIN AND ALL TIGHTLINE PIPES GREATER THAN 300 FEET LONG. REFER TO 3/C2.21 AND 5/C2.21
12. REFER TO SHEETS U1.0 THRU U1.5 FOR UTILITIES.
13. FOR TYPICAL TRACK SUBDRAIN INSTALLATION, REFER TO 3/C2.27
14. REFER TO SHEET C2.6, STORM DRAINAGE GENERAL NOTE 10 FOR CONDITIONS OF ALLOWABLE TEMPORARY STORMWATER DISCHARGE TO EXISTING STORMWATER POND ADJACENT TO TAYLOR WAY.

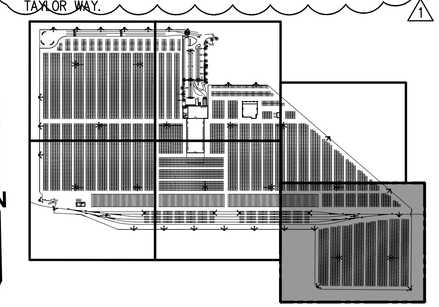

KEY PLAN
NTS

Port of Tacoma
P.O. BOX 1837 TACOMA, WA 98401 (253)383-5841

kpff
2407 North 31st Street, Suite 100
Tacoma, Washington 98407
(253) 396-0150 Fax (253) 396-0162

MARK:	REVISION:	BY:	APPR:	DATE:
1	ADDENDUM #4	CMB		6/5

MADE KING COUNTY, WASHINGTON
CHRISTOPHER M. BUCKLEY
STATE OF WASHINGTON
32731
5/9/18
PROFESSIONAL ENGINEER

CMB	5/7/2018	
CHECKED BY	DATE	
SWK	5/9/2018	
DIRECTOR ENG.	DATE	PROJ. ENGR DATE

APPROVED:

PRINTED BY: Hemons Jun 06, 2018
PORT ADDRESS: ONE SITCUM PLAZA TACOMA WA, 98401-1837

PARCEL 77 AUTO IMPORT TERMINAL

GRADING & DRAINAGE
AREA 6

TOWNSHIP: 21N	RANGE: 3E	SECTION: 36	
DAT-HRZ: W83-SF	VERT: PORT OF TACOMA BM#		
PARCEL: MULTIPLE	DRAWING SCALE: AS SHOWN		

C2.5

55 OF 163

CONT/CONS:	070770
M. ID:	201020.01
PHASE:	BID SET

THIS DRAWING IS THE PROPERTY OF THE PORT OF TACOMA AND SHALL NOT BE USED ON OTHER WORK, DISCLOSED, COPIED, IN WHOLE OR IN PART, WITHOUT WRITTEN PERMISSION

BINDING EDGE
PORT OF TACOMA FILE: N:\2017\1700082 Automobile Import Terminal Planning\Part 3 - KPFF Design\3.13 Drawings\Current\30pc Design\C2.0-C2.5 GRADING DRAINAGE AND UTILITY PLANS

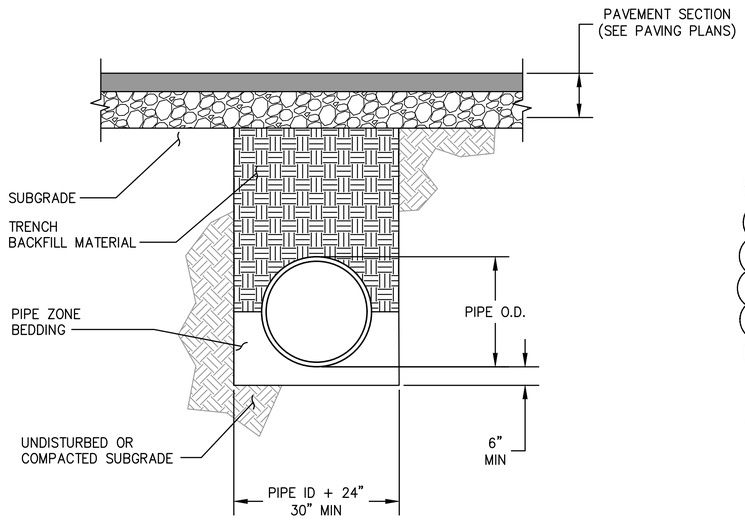

NOTE:

1. CONTRACTOR SHALL PROVIDE DEWATERING SYSTEMS AS REQUIRED DURING PIPE INSTALLATIONS.

1 C2.21 TYPICAL STORM DRAINAGE TRENCH DETAIL

NTS

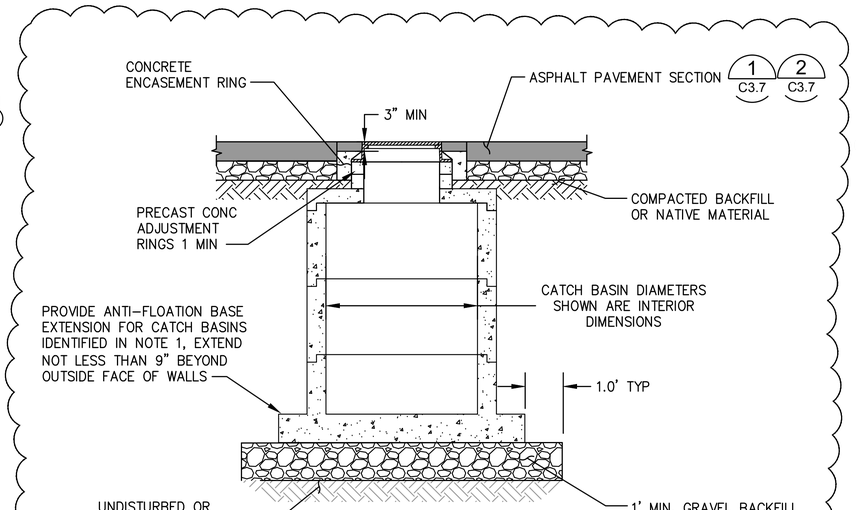

NOTE:

1. PROVIDE ANTI-FLOTATION BASE EXTENSION FOR CATCH BASINS: CB1, CB2, CB3, CB4, CB5, CB6, CB12, CB13, CB14, CB16, CB17, CB18, CB19, CB22, CB23, CB24, CB44, CB46, CB72, CB73, CB74.

2 C2.21 TYPICAL CATCH BASIN TYPE 2 INSTALLATION DETAIL

NTS

1

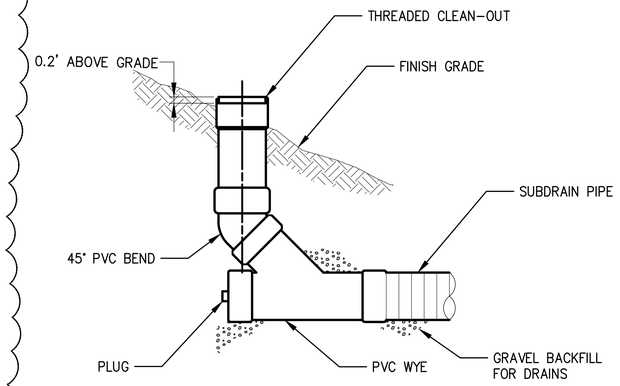

3 C2.21 TYPICAL BIORETENTION AREA CLEANOUT DETAIL

NTS

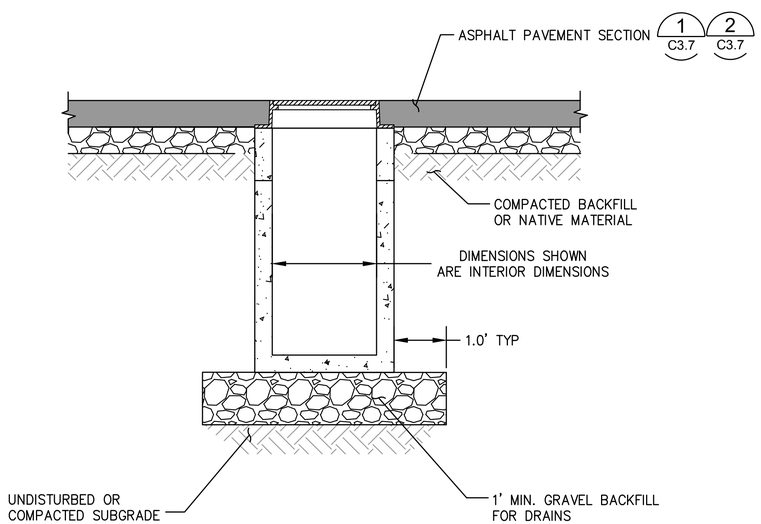

4 C2.21 TYPICAL CATCH BASIN TYPE 1 INSTALLATION DETAIL

NTS

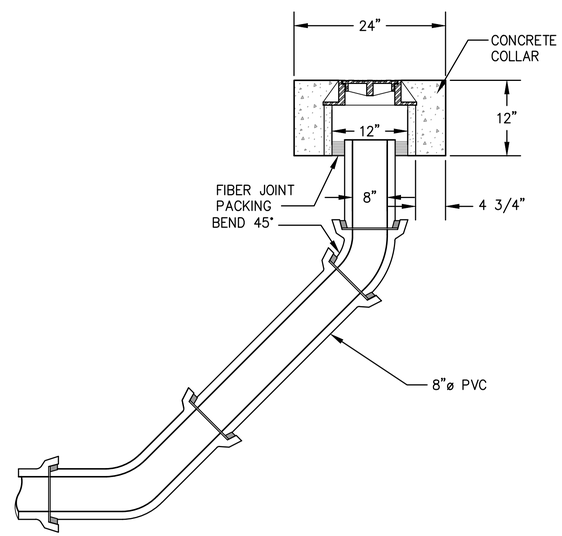

5 C2.21 PA□ED OR OPEN BALLAST AREA STORM DRAIN CLEANOUT

NTS

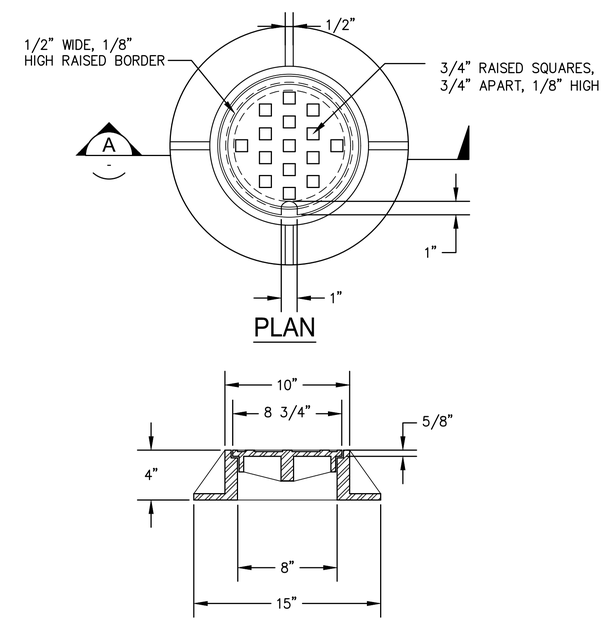

Port of Tacoma
P.O. BOX 1837 TACOMA, WA 98401 (253)383-5841

kpff
2407 North 31st Street, Suite 100
Tacoma, WA 98407-3500
(253) 396-0130 Fax (253) 396-0162

MARK:	REVISION:	BY:	APPR:	DATE:
1	ADDENDUM #4	CMB		6/5

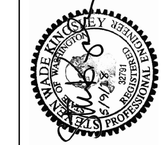

CMB 5/7/2018
CHECKED BY DATE
SWK 5/9/2018
PROJ. ENGR DATE
cbennett Jun 06, 2018
PRINTED BY:
PORT ADDRESS: ONE SITCUM PLAZA
TACOMA WA, 98401-1837

APPROVED:

DIRECTOR, ENG. DATE

PARCEL 77 AUTO IMPORT TERMINAL

STORM DRAINAGE DETAILS

C2.21

71 OF 163

CONT/CONS:	070770	TOWNSHIP: 21N	RANGE: 3E
M. ID:	201020.01	DAT-HRZ: W83-SF	VERT: PORT OF TACOMA BM#
PHASE:	BID SET	PARCEL: MULTIPLE	DRAWING SCALE: AS SHOWN

SECTION: 36

THIS DRAWING IS THE PROPERTY OF THE PORT OF TACOMA AND SHALL NOT BE USED ON OTHER WORK, DISCLOSED, COPIED, IN WHOLE OR IN PART, WITHOUT WRITTEN PERMISSION

PORT OF TACOMA FILE: N:\2017\1700082 Automobile Import Terminal Planning\Part 3 - KPFF Design\3.13 Drawings\Current\30pc Design\C2.21 STORM DRAINAGE DETAILS

BINDING EDGE

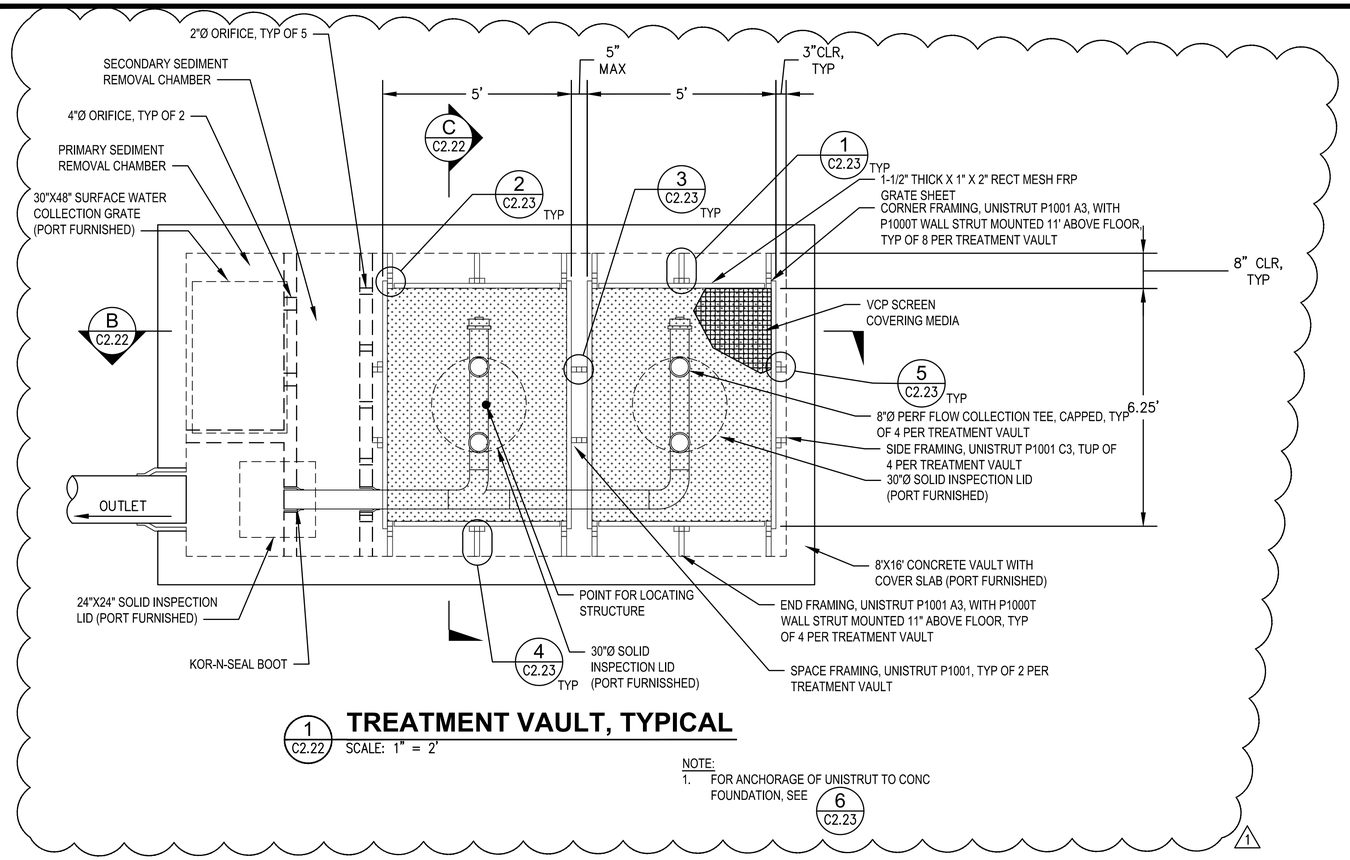

1 C2.22 TREATMENT VAULT, TYPICAL

SCALE: 1" = 2'

NOTE:
1. FOR ANCHORAGE OF UNISTRUT TO CONC FOUNDATION, SEE 6 C2.23

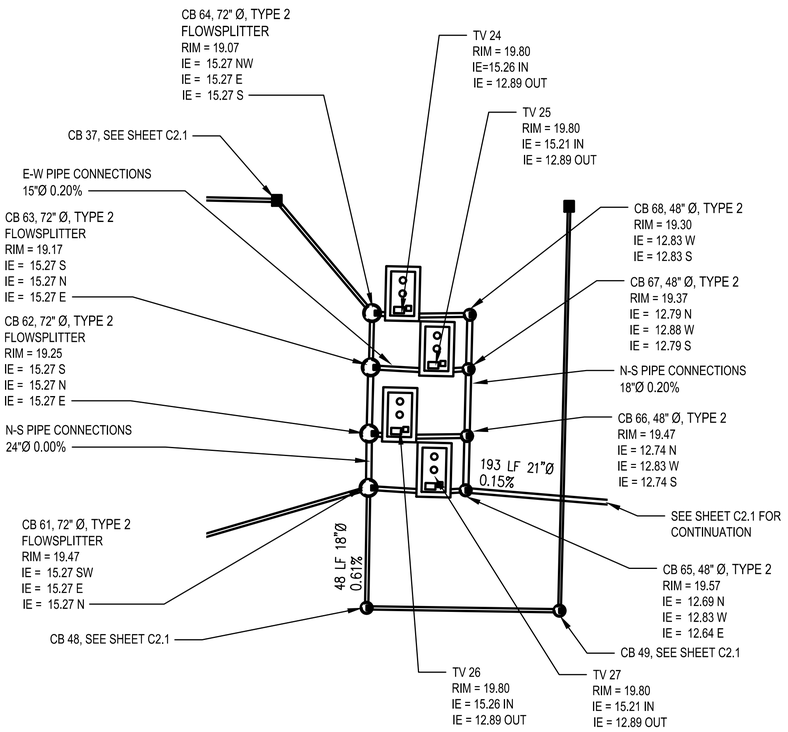

A C2.22 NORTHERN TREATMENT VAULTS

SCALE: 1" = 30'

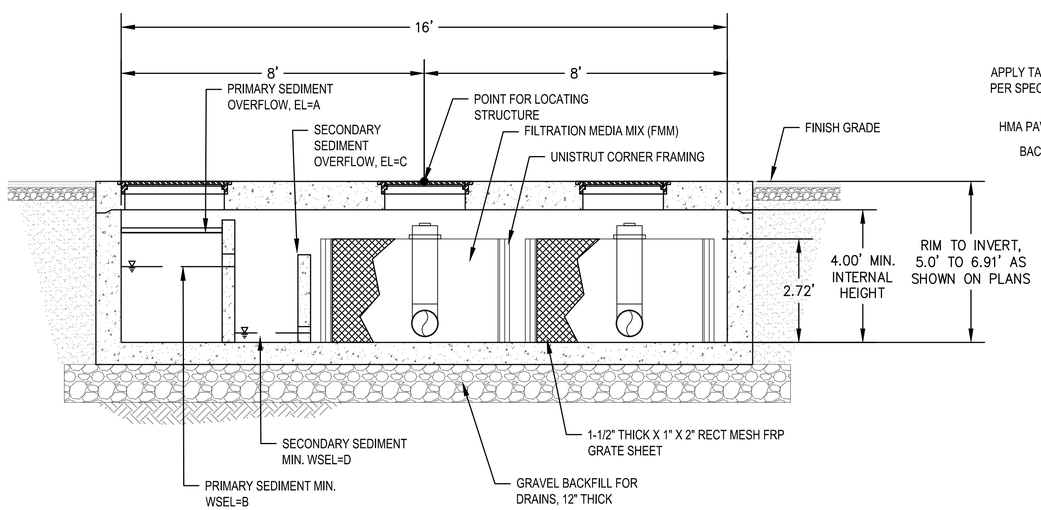

B C2.22 TREATMENT VAULT SECTION

SCALE: 1" = 2'

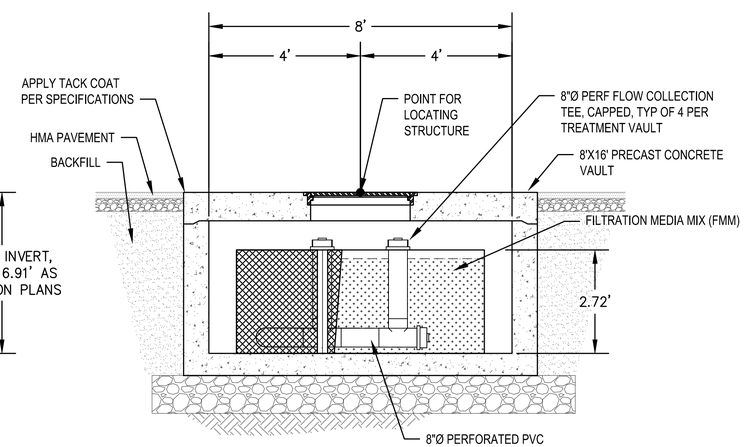

C C2.22 TREATMENT VAULT SECTION

SCALE: 1" = 2'

NOTES

1. CONCRETE □AULT COMPLETE WITH BAFFLE WALLS, INSPECTION LIDS AND COLLECTION GRATE SHALL BE PORT FURNISHED.

TREATMENT □AULT

BASIS OF DESIGN:
FMM CAGE SIDE SURFACE AREA □ 112.8 SF
FMM CAGE TOP SURFACE AREA □ 73.8 SF
FMM CAGE SURFACE AREA □ 186.6 SF
TREATMENT RATE □ 1 GPM/SF
□AULT TREATMENT CAPACITY □ 186.6 GPM (0.42 CFS)

ELE□ATIONS:
A □ 43" ABO□E □AULT FLOOR, 37.5" W/ONE 2X2 FLASHBOARD
B □ 24" ABO□E □AULT FLOOR
C □ 28" ABO□E □AULT FLOOR, 35" W/TWO 2X4 FLASHBAORDS
D □ 3" ABO□E □AULT FLOOR
E □ 45" ABO□E □AULT FLOOR

Port of Tacoma
P.O. BOX 1837 TACOMA, WA 98401 (253)383-5841
kpff
2407 North 31st Street, Suite 100
Tacoma, WA 98407
(253) 396-0150 Fax (253) 396-0162

MARK:	REVISION:	BY:	APPR:	DATE:
1	ADDENDUM #4	CMB		6/5

CMB 5/7/2018
CHECKED BY DATE
SWK 5/9/2018
DIRECTOR ENG. DATE
PRINTED BY: cbennett Jun 06, 2018
PORT ADDRESS: ONE SITCUM PLAZA TACOMA WA, 98401-1837

APPROVED:

PARCEL 77 AUTO IMPORT TERMINAL

STORMWATER TREATMENT VAULT DETAILS

TOWNSHIP: 21N | RANGE: 3E | SECTION: 36
DAT–HRZ: W83-SF | VERT: PORT OF TACOMA BM#
PARCEL: MULTIPLE | DRAWING SCALE: AS SHOWN

C2.22

72 OF 163

CONT/CONS: 070770
M. ID: 201020.01
PHASE: BID SET

THIS DRAWING IS THE PROPERTY OF THE PORT OF TACOMA AND SHALL NOT BE USED ON OTHER WORK, DISCLOSED, COPIED, IN WHOLE OR IN PART, WITHOUT WRITTEN PERMISSION

PORT OF TACOMA FILE: N:\2017\1700082 Automobile Import Terminal Planning\Part 3 - KPFF Design\3.13 Drawings\Current\30pc Design\C2.22 STORMWATER TREATMENT VAULT DETAILS
BINDING EDGE

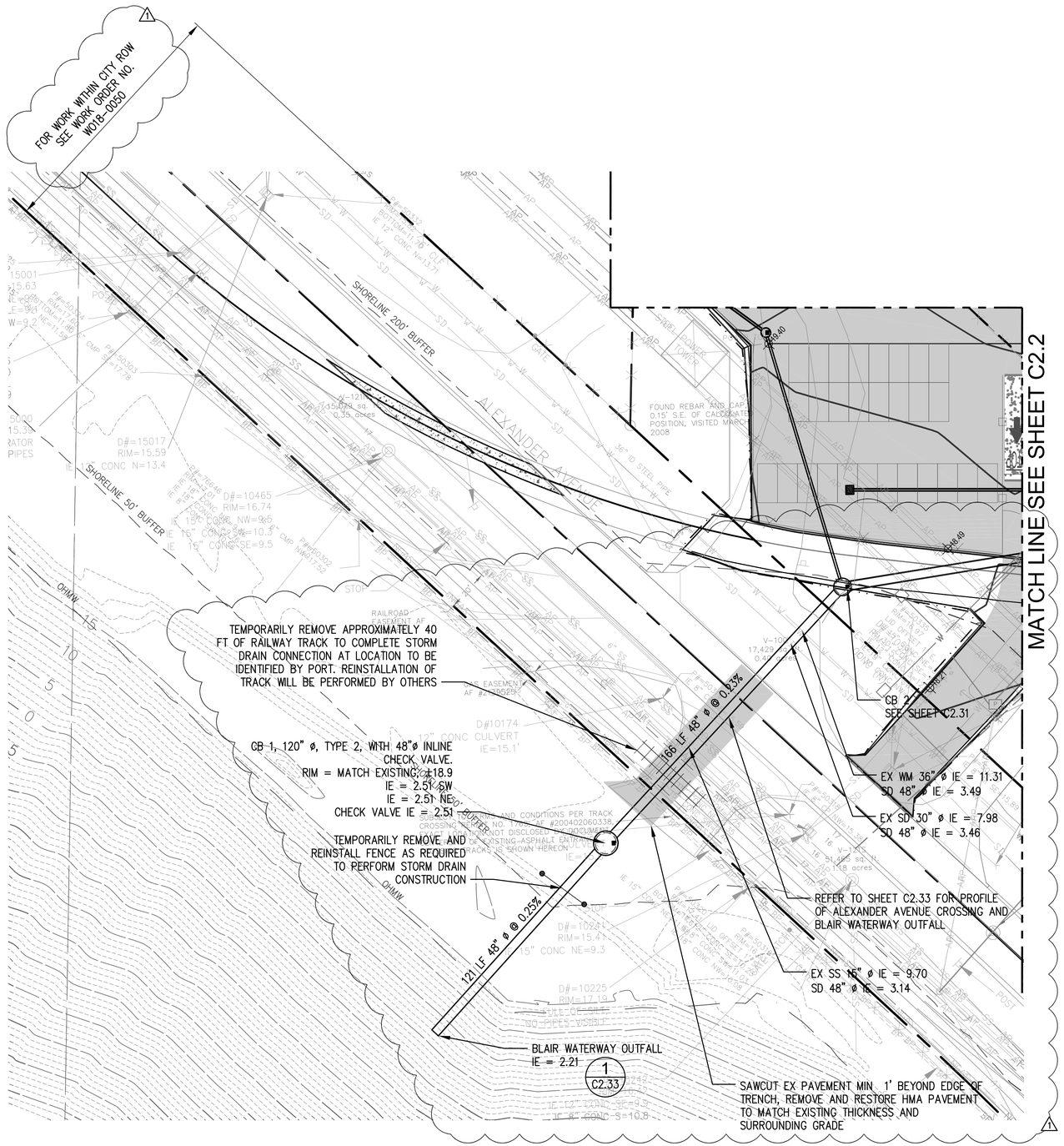

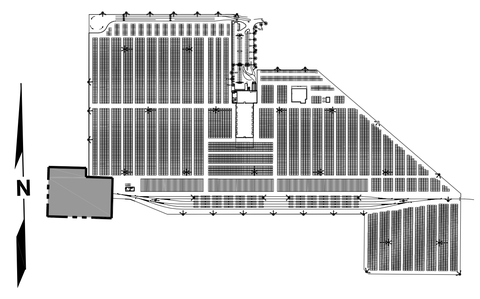

KEY PLAN
NTS

0 30 60 90
SCALE IN FEET

kpff
2407 North 31st Street, Suite 100
Tacoma, Washington 98407
(253) 396-0150 Fax (253) 396-0162

Port of Tacoma
P.O. BOX 1837 TACOMA, WA 98401 (253)383-5841

MARK:	REVISION:	BY:	APPR:	DATE:
1	ADDENDUM #4	CMB		6/5

WADE KING STEVENS
STATE OF WASHINGTON
32131
REGISTERED PROFESSIONAL ENGINEER
5/9/18

APPROVED:

DIRECTOR ENG.	DATE	
CMB	5/7/2018	
CHECKED BY	DATE	
SWK	5/9/2018	
PROJ. ENGR	DATE	

PRINTED BY: cbennett Jun 06, 2018
PORT ADDRESS: ONE SITCUM PLAZA TACOMA WA, 98401-1837

PARCEL 77 AUTO IMPORT TERMINAL

BLAIR WATERWAY OUTFALL PLAN

C2.30

80 OF 163

CONT/CONS:	070770	TOWNSHIP: 21N	RANGE: 3E
M. ID:	201020.01	DAT-HRZ: W83-SF	SECTION: 36
PHASE:	BID SET	PARCEL: MULTIPLE	VERT: PORT OF TACOMA BM#
			DRAWING SCALE: AS SHOWN

THIS DRAWING IS THE PROPERTY OF THE PORT OF TACOMA AND SHALL NOT BE USED ON OTHER WORK, DISCLOSED, COPIED, IN WHOLE OR IN PART, WITHOUT WRITTEN PERMISSION

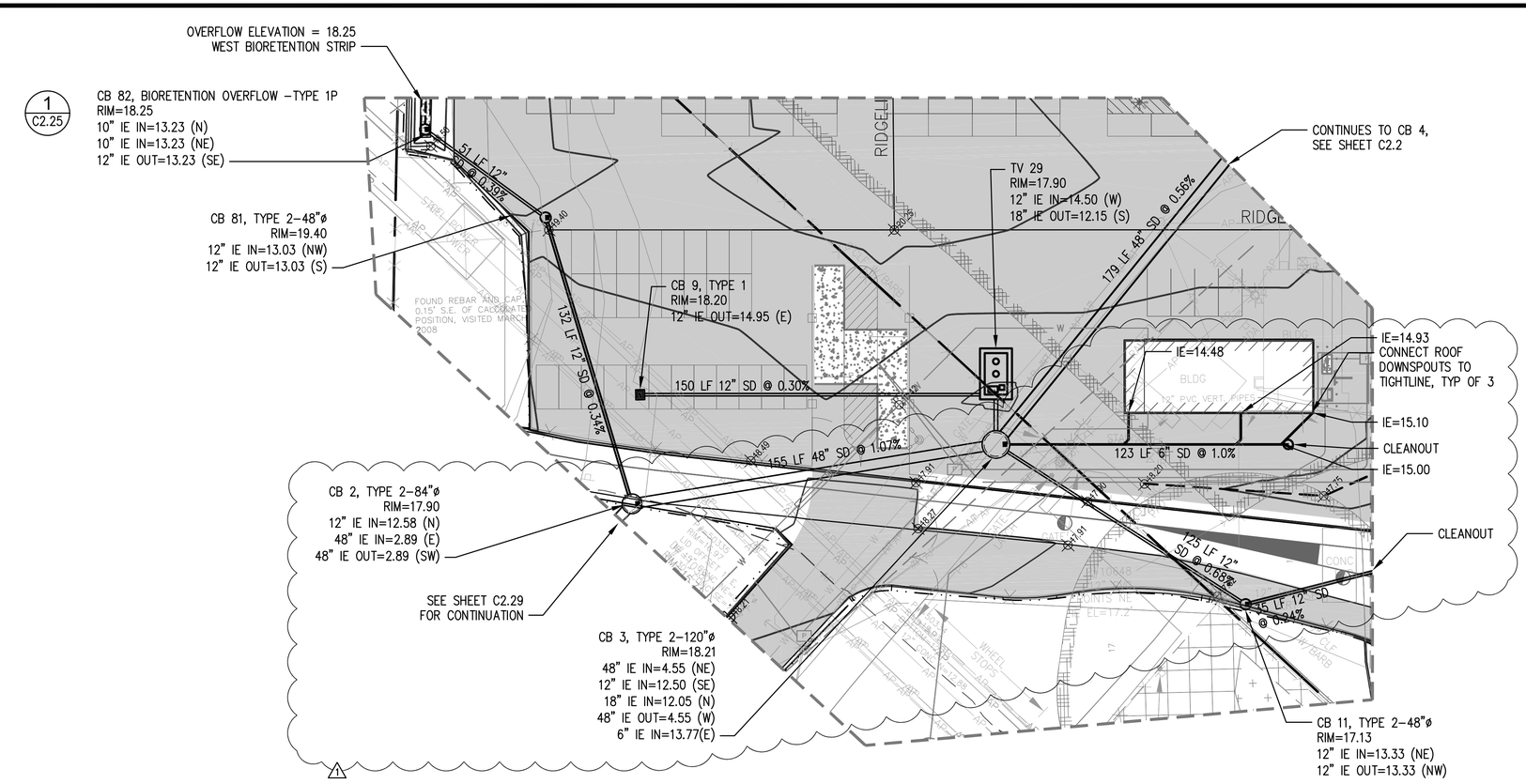

1 C2.31 **SOUTH DRIVEWAY DRAINAGE PLAN**
SCALE: 1" = 30'

0 30 60 90
SCALE IN FEET

Port of Tacoma
P.O. BOX 1837 TACOMA, WA 98401 (253)383-5841

kpff
2407 North 31st Street, Suite 100
Tacoma, Washington 98407
(253) 396-0150 Fax (253) 396-0162

MARK:	REVISION:	BY:	APPR:	DATE:
1	ADDENDUM #4	CMB		6/5

NATHAN WADE KINGSLEY
STATE OF WASHINGTON
32791
REGISTERED PROFESSIONAL ENGINEER
5/9/18

APPROVED:

CMB	5/7/2018	
CHECKED BY	DATE	
SWK	5/9/2018	
DIRECTOR ENG.	DATE	
PROJ. ENGR	DATE	
PRINTED BY:	cbennett Jun 06, 2018	
PORT ADDRESS:	ONE SITCUM PLAZA TACOMA WA, 98401-1837	

PARCEL 77 AUTO IMPORT TERMINAL

SOUTH DRIVEWAY DRAINAGE PLAN

TOWNSHIP:	21N	SECTION:	36
RANGE:	3E		
DAT–HRZ:	W83-SF	VERT:	PORT OF TACOMA BM#
PARCEL:	MULTIPLE	DRAWING SCALE:	AS SHOWN

C2.31

81 OF 163

CONT/CONS:	070770
M. ID:	201020.01
PHASE:	BID SET

THIS DRAWING IS THE PROPERTY OF THE PORT OF TACOMA AND SHALL NOT BE USED ON OTHER WORK, DISCLOSED, COPIED, IN WHOLE OR IN PART, WITHOUT WRITTEN PERMISSION

PORT OF TACOMA FILE: N:\2017\17000082 Automobile Import Terminal Planning\Part 3 - KPFF Design\3.13 Drawings\Current\30pc Design\C2.30-C2.31 BLAIR WATERWAY OUTFALL PLAN AND S DRIVEWAY PLAN

BINDING EDGE

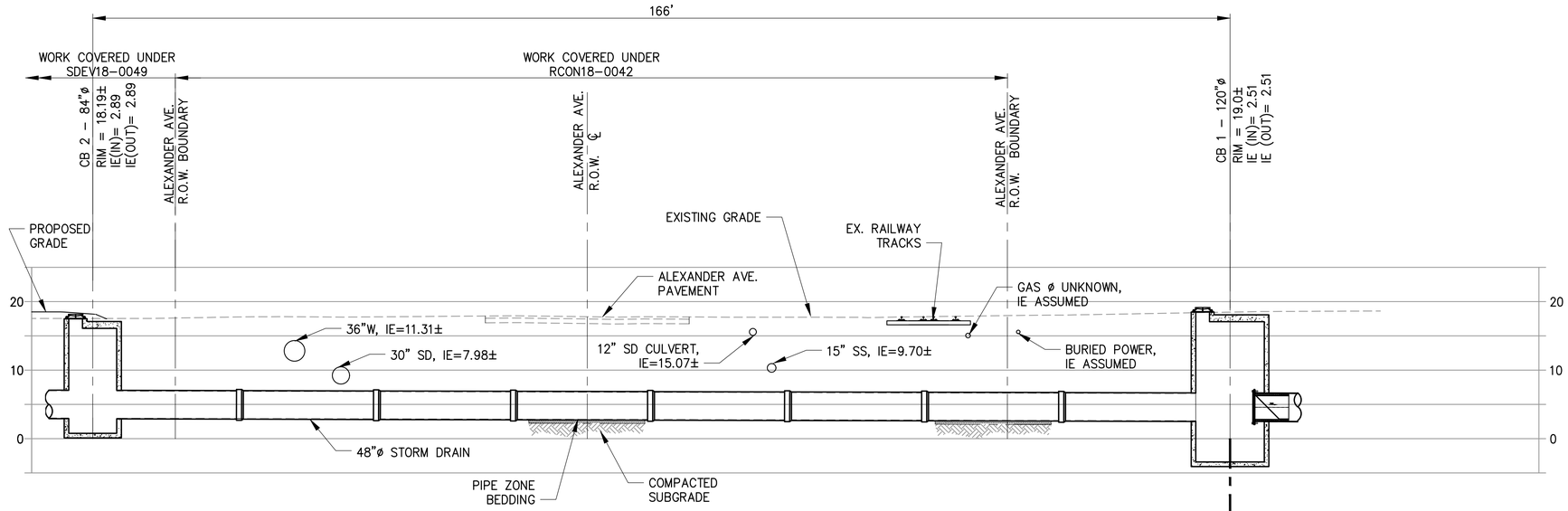

1 / C2.33 STORM DRAIN CROSSING OF ALEXANDER AVENUE

SCALE: 1" = 10'

SAME STRUCTURE

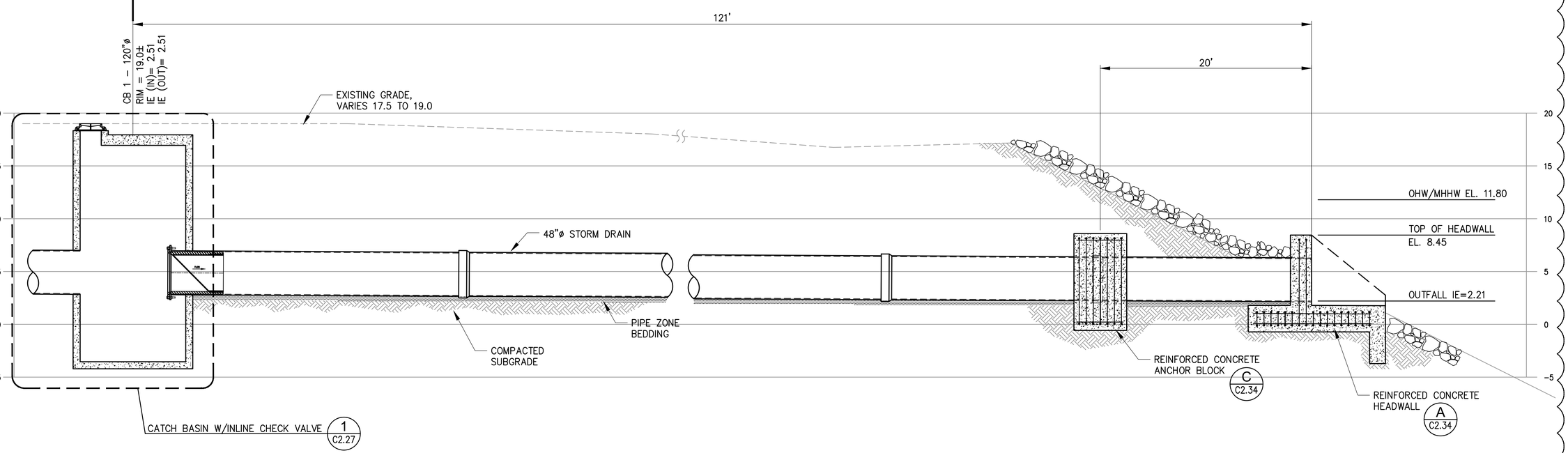

1 / C2.33 BLAIR WATERWAY OUTFALL

SCALE: 1" = 5'

Port of Tacoma
P.O. BOX 1837 TACOMA, WA 98401 (253)383-5841

kpff
2407 North 31st Street, Suite 100
Tacoma, Washington 98407
(253) 396-0150 Fax (253) 396-0162

MARK:	REVISION:	BY:	APPR:	DATE:
1	ADDENDUM #4	CMB		6/5

WADE KING SWEY, STATE OF WASHINGTON, 32791, REGISTERED PROFESSIONAL ENGINEER, 5/9/18

APPROVED:

DIRECTOR ENG. DATE

CMB	5/7/2018	CHECKED BY	DATE
SWK	5/9/2018	PROJ. ENGR	DATE

PRINTED BY: cbennett Jun 06, 2018
PORT ADDRESS: ONE SITCUM PLAZA TACOMA WA, 98401-1837

PARCEL 77 AUTO IMPORT TERMINAL

BLAIR OUTFALL
PROFILE AND SECTIONS

TOWNSHIP: 21N	RANGE: 3E	SECTION: 36	
DAT-HRZ: W83-SF	VERT: PORT OF TACOMA BM#		
PARCEL: MULTIPLE	DRAWING SCALE: AS SHOWN		

C2.33

83 OF 163

CONT/CONS:	070770		
M. ID:	201020.01		
PHASE:	BID SET		

THIS DRAWING IS THE PROPERTY OF THE PORT OF TACOMA AND SHALL NOT BE USED ON OTHER WORK, DISCLOSED, COPIED, IN WHOLE OR IN PART, WITHOUT WRITTEN PERMISSION

PORT OF TACOMA FILE: N:\2017\1700082 Automobile Import Terminal Planning\Part 3 - KPFF Design\3.13 Drawings\Current\30pc Design\C2.33 BLAIR OUTFALL PROFILE AND SECTIONS

BINDING EDGE