Attachment D

NOTES :

1. ALL FENCING MATERIALS SHALL BE POLYVINYL CHLORIDE (PVC) COATED, UNLESS NOTED OTHERWISE.

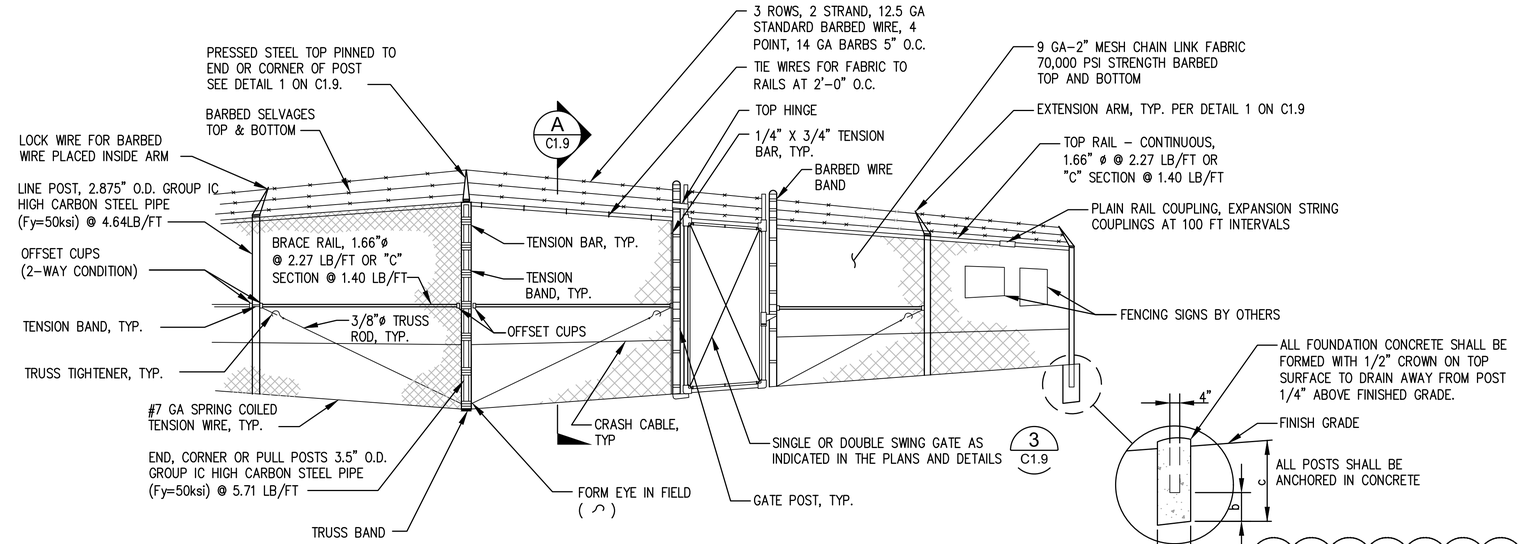

1 C1.8 BLACK VINYL COATED CHAIN LINK FENCE DETAIL

NTS

CONCRETE FOUNDATION DIMENSIONS			
LOCATION	a	b	c
CORNER	12"	6"	4'-6"
END	12"	6"	4'-6"
GATE	18" + POST OD	6"	4'-6"
LINE & TYP	10"	6"	4'-6"

1

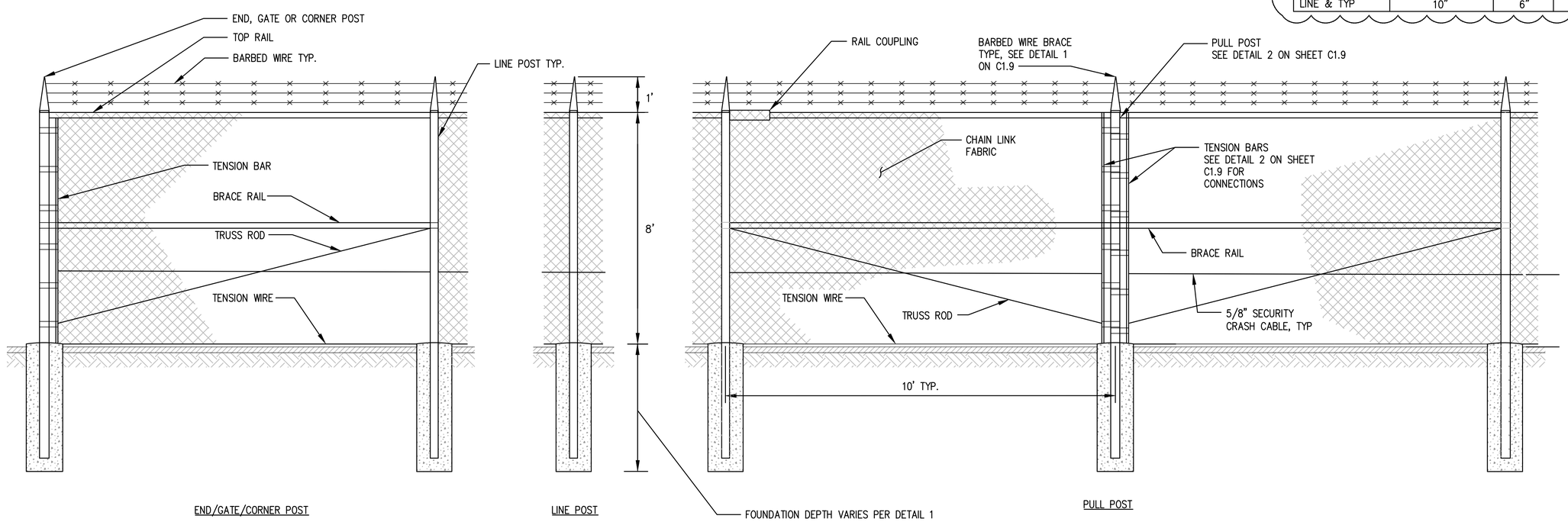

2 C1.8 PULL POST/LINE POST DETAIL

NTS

Port of Tacoma
P.O. BOX 1837 TACOMA, WA 98401 (253)383-5841

kpff
2407 North 31st Street, Suite 100
Tacoma, Washington 98407
(253) 396-0150 Fax (253) 396-0162

MARK:	REVISION:	BY:	APPR:	DATE:
1	ADDENDUM #4	CMB		6/5

WADE KING CRAWFORD
STATE OF WASHINGTON
32791
REGISTERED PROFESSIONAL ENGINEER
5/9/18

CMB 5/7/2018
CHECKED BY DATE
SWK 5/9/2018
PROJ. ENGR DATE
tlemons Jun 06, 2018
DIRECTOR ENG. DATE
PRINTED BY:
PORT ADDRESS: ONE SITCUM PLAZA TACOMA WA, 98401-1837

APPROVED:

PARCEL 77 AUTO IMPORT TERMINAL

SITE DETAILS

TOWNSHIP: 21N	RANGE: 3E	SECTION: 36	
DAT-HRZ: W83-SF	VERT: PORT OF TACOMA BM#		
PARCEL: MULTIPLE	DRAWING SCALE: AS SHOWN		

C1.8
38 OF 163

CONT/CONS: 070770
M. ID: 201020.01
PHASE: BID SET

THIS DRAWING IS THE PROPERTY OF THE PORT OF TACOMA AND SHALL NOT BE USED ON OTHER WORK, DISCLOSED, COPIED, IN WHOLE OR IN PART, WITHOUT WRITTEN PERMISSION

PORT OF TACOMA FILE: N:\2017\1700082 Automobile Import Terminal Planning\Part 3 - KPFF Design\3.13 Drawings\Current\30pc Design\C1.8-C1.11 SITE DETAILS

BINDING EDGE

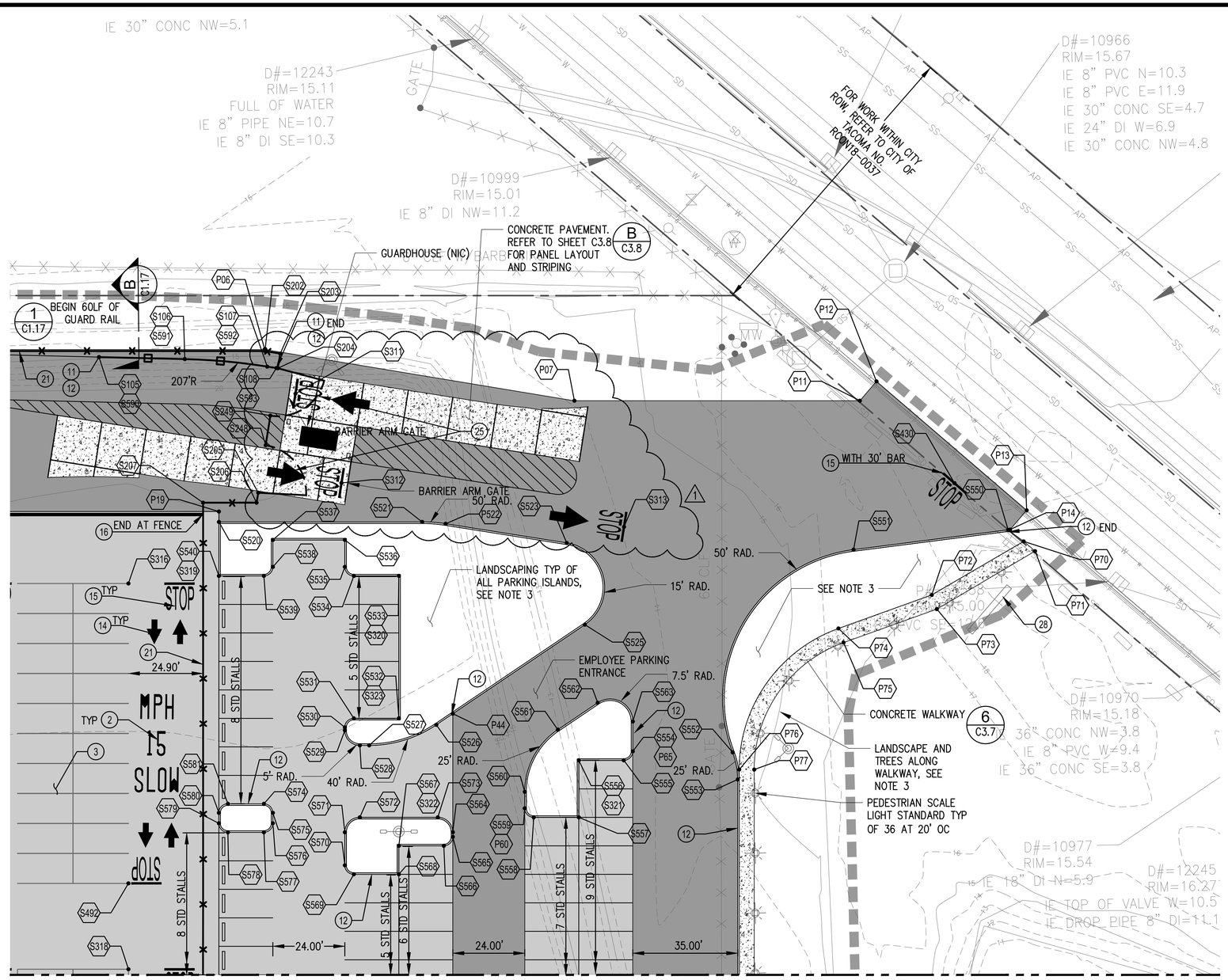

MATCH LINE SEE SHEET C1.12

1 C1.13 NORTH DRIVEWAY

1" = 20'

0 20 40 60

SCALE IN FEET

N

GENERAL NOTES

1. REFER TO SHEET G1.6 FOR LEGEND AND ABBREVIATIONS
2. SEE SHEET C1.6 FOR STRIPING DATA NOT SHOWN ON PLAN
3. SELECT SIGNAGE, AISLE LETTERING AND LINE NUMBERING NOT SHOWN ON PLANS. SEE DETAILS 1 AND 3 ON C1.11 FOR AISLE LETTERING AND LINE NUMBERING LOCATIONS, SIZE, AND COLOR. SEE C1.19 FOR ADD'L SIGNS TO BE PROVIDED.
4. SEE SHEETS C1.7 AND C3.6 FOR HORIZONTAL LAYOUT POINTS.
5. REFER TO C3.0 THROUGH C3.5 FOR PAVEMENT LAYOUT.

SITE CONSTRUCTION NOTES

1. PAINT STORAGE STALLS (9.5'X18.5') PER DETAIL 1 ON C1.11.
2. PAINT 'SLOW 15 MPH' PAVEMENT MARKING PER DETAIL 6 ON C1.15.
3. PAINT HAULAWAY QUEUING BAYS (10'X20') PER DETAIL 3 ON C1.11.
4. PAINT RAIL LOADLINES PER DETAIL 4 ON C1.11
5. PAINT UTILITY CLEAR ZONE FOR LIGHT POLES PER DETAIL 6 ON C1.11.
6. PAINT EMPLOYEE PARKING LAYOUT PER DETAIL 5 ON C1.11.
7. WHEEL STOPS PER DETAIL 2 ON C1.15.
8. PAINT TRUCK DIRECTIONAL ARROWS PER DETAIL 3 ON C1.15.
9. PAINT CIRCULATION ARROWS PER DETAIL 11 ON C1.15.
10. NOT USED
11. GUARD RAIL, PER DETAIL 1 ON C1.17.
12. VERTICAL CURB, PER DETAIL 1 ON C1.15.
13. BICYCLE LOCKER WITH LOCKING SYSTEM AND VIEW HOLE, QTY 2 EA., BY OTHERS
14. PAINT AUTO DIRECTIONAL ARROW PER DETAIL 4 ON C1.15.
15. PAINT 'STOP' PAVEMENT MARKING PER DETAIL 5 ON C1.15.
16. PAINT 'NO-TRUCKS' LINE PER DETAILS 7 ON C1.15 AND 1 ON C1.10.
17. PAINT MOBILE RAMP PARKING AREA PER DETAIL 3 ON C1.10.
18. PAINT HAULAWAY TRUCK LOADING PLAZA PER DETAIL 1 ON C1.10.
19. PAINT HIGH MAST LIGHT POLES PER DETAIL 8 ON C1.15.
20. INSTALL BRIDGE PLATE RACK PER DETAIL 1 ON C1.16.
21. FENCE PER DETAILS ON C1.8 & C1.9
22. 4 FT SINGLE LEAF MAN GATE PER DETAILS ON C1.8 & C1.9
23. 15 FT SINGLE LEAF UTILITY GATE PER DETAILS ON C1.8 & C1.9
24. 24 FT DOUBLE LEAF RAIL GATE PER DETAILS ON C1.8 & C1.9
25. 16 FT SINGLE LEAF ENTRANCE GATE PER DETAILS ON C1.8 & C1.9
26. 41 FT DOUBLE LEAF ENTRANCE GATE PER DETAILS ON C1.8 & C1.9
27. 23 FT DOUBLE LEAF ENTRANCE GATE PER DETAILS ON C1.8 & C1.9
28. MONUMENT SIGN, BY OTHERS, PER DETAIL 3 ON C1.19, FINAL LOCATION TO BE REVIEWED AND APPROVED BY ENGINEER PRIOR TO INSTALLATION.
29. FLAGPOLE, FOUNDATION PER DETAIL 5 ON C1.19 OR AS DESIGNED BY FLAG POLE SUPPLIER.

NOTES

1. ALL DIMENSIONS ARE TO FACE OF CURB, UNLESS NOTED OTHERWISE.
2. ALL CURB FACE RADII SHALL BE 3 FEET, UNLESS NOTED OTHERWISE.
3. SEE LANDSCAPE SHEET L1.1
4. PAVE TO CURB WHERE PAVEMENT LAYOUT POINTS ARE NOT SHOWN

Port of Tacoma
P.O. BOX 1837 TACOMA, WA 98401 (253)383-5841

kpff
2407 North 31st Street, Suite 100
Tacoma, WA 98407
(253) 396-0150 Fax (253) 396-0162

MARK:	REVISION:	BY:	APPR:	DATE:
1	ADDENDUM #4	CMB		6/5

STATE OF WASHINGTON CHRISTOPHER MICHAEL BENNETT 32791 REGISTERED PROFESSIONAL ENGINEER

		CMB	5/7/2018
APPROVED:		CHECKED BY	DATE
		SWK	5/9/2018
DIRECTOR, ENG.	DATE	PROJ. ENGR	DATE

PRINTED BY: cbennett Jun 06, 2018
PORT ADDRESS: ONE SITCUM PLAZA TACOMA WA, 98401-1837

PARCEL 77 AUTO IMPORT TERMINAL

NORTH DRIVEWAY
SITE PLAN

TOWNSHIP: 21N	RANGE: 3E	SECTION: 36	
DAT-HRZ: W83-SF	VERT: PORT OF TACOMA BM#		
PARCEL: MULTIPLE	DRAWING SCALE: AS SHOWN		

C1.13

43 OF 163

CONT/CONS:	070770
M. ID:	201020.01
PHASE:	BID SET

THIS DRAWING IS THE PROPERTY OF THE PORT OF TACOMA AND SHALL NOT BE USED ON OTHER WORK, DISCLOSED, COPIED, IN WHOLE OR IN PART, WITHOUT WRITTEN PERMISSION

BINDING EDGE
PORT OF TACOMA FILE: N:\2017\1700082 Automobile Import Terminal Planning\Part 3 - KPFF Design\3.13 Drawings\Current\30pc Design\C1.12-C1.14 SITE PART PLANS

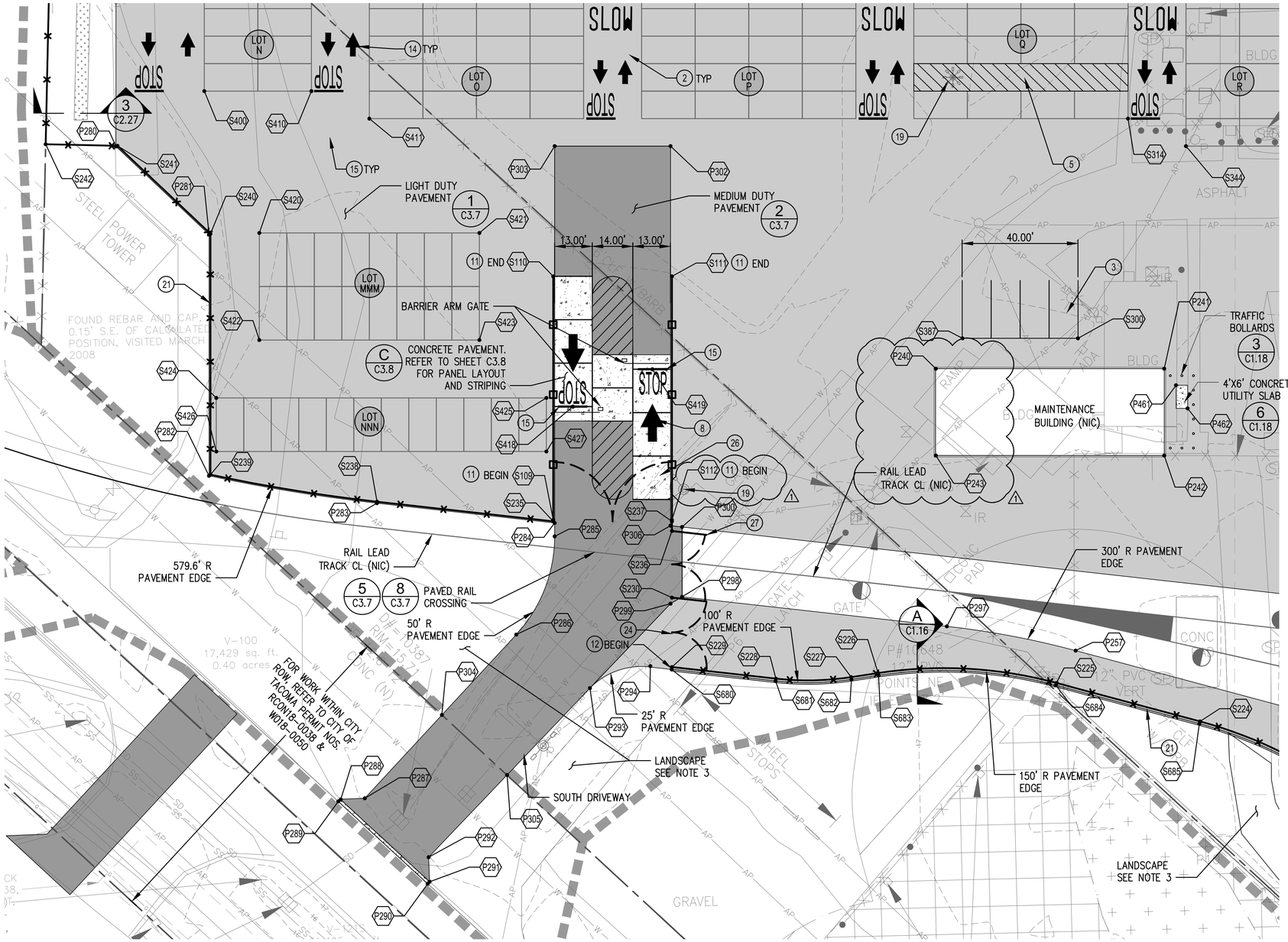

1 C1.14 SOUTH DRIVEWAY

1"□20□

GENERAL NOTES

1. REFER TO SHEET G1.6 FOR LEGEND AND ABBREVIATIONS
2. SEE SHEET C1.6 FOR STRIPING DATA NOT SHOWN ON PLAN
3. SELECT SIGNAGE, AISLE LETTERING AND LINE NUMBERING NOT SHOWN ON PLANS. SEE DETAILS 1 AND 3 ON C1.11 FOR AISLE LETTERING AND LINE NUMBERING LOCATIONS, SIZE, AND COLOR. SEE C1.19 FOR ADD'L SIGNS TO BE PROVIDED.
4. SEE SHEETS C1.7 AND C3.6 FOR HORIZONTAL LAYOUT POINTS.
5. REFER TO C3.0 THROUGH C3.5 FOR PAVEMENT LAYOUT.

SITE CONSTRUCTION NOTES

1. PAINT STORAGE STALLS (9.5'X18.5') PER DETAIL 1 ON C1.11.
2. PAINT 'SLOW 15 MPH' PAVEMENT MARKING PER DETAIL 6 ON C1.15.
3. PAINT HAULAWAY QUEUING BAYS (10'X20') PER DETAIL 3 ON C1.11.
4. PAINT RAIL LOADLINES PER DETAIL 4 ON C1.11
5. PAINT UTILITY CLEAR ZONE FOR LIGHT POLES PER DETAIL 6 ON C1.11.
6. PAINT EMPLOYEE PARKING LAYOUT PER DETAIL 5 ON C1.11.
7. WHEEL STOPS PER DETAIL 2 ON C1.15.
8. PAINT TRUCK DIRECTIONAL ARROWS PER DETAIL 3 ON C1.15.
9. PAINT CIRCULATION ARROWS PER DETAIL 11 ON C1.15.
10. NOT USED
11. GUARD RAIL, PER DETAIL 1 ON C1.17.
12. VERTICAL CURB, PER DETAIL 1 ON C1.15.
13. BICYCLE LOCKER WITH LOCKING SYSTEM AND VIEW HOLE, QTY 2 EA., BY OTHERS
14. PAINT AUTO DIRECTIONAL ARROW PER DETAIL 4 ON C1.15.
15. PAINT 'STOP' PAVEMENT MARKING PER DETAIL 5 ON C1.15.
16. PAINT 'NO-TRUCKS' LINE PER DETAILS 7 ON C1.15 AND 1 ON C1.10.
17. PAINT MOBILE RAMP PARKING AREA PER DETAIL 3 ON C1.10.
18. PAINT HAULAWAY TRUCK LOADING PLAZA PER DETAIL 1 ON C1.10.
19. PAINT HIGH MAST LIGHT POLES PER DETAIL 8 ON C1.15.
20. INSTALL BRIDGE PLATE RACK PER DETAIL 1 ON C1.16.
21. FENCE PER DETAILS ON C1.8 & C1.9
22. 4 FT SINGLE LEAF MAN GATE PER DETAILS ON C1.8 & C1.9
23. 15 FT SINGLE LEAF UTILITY GATE PER DETAILS ON C1.8 & C1.9
24. 24 FT DOUBLE LEAF RAIL GATE PER DETAILS ON C1.8 & C1.9
25. 16 FT SINGLE LEAF ENTRANCE GATE PER DETAILS ON C1.8 & C1.9
26. 41 FT DOUBLE LEAF ENTRANCE GATE PER DETAILS ON C1.8 & C1.9
27. 23 FT DOUBLE LEAF ENTRANCE GATE PER DETAILS ON C1.8 & C1.9
28. MONUMENT SIGN, BY OTHERS, PER DETAIL 3 ON C1.19, FINAL LOCATION TO BE REVIEWED AND APPROVED BY ENGINEER PRIOR TO INSTALLATION.
29. FLAGPOLE, FOUNDATION PER DETAIL 5 ON C1.19 OR AS DESIGNED BY FLAG POLE SUPPLIER.

NOTES

1. ALL DIMENSIONS ARE TO FACE OF CURB OR EDGE OF PAVEMENT, UNLESS NOTED OTHERWISE.
2. ALL CURB FACE RADII SHALL BE 3 FEET, UNLESS NOTED OTHERWISE.
3. SEE LANDSCAPE SHEET L1.2
4. PAVE TO CURB WHERE PAVEMENT LAYOUT POINTS ARE NOT SHOWN

Port of Tacoma
P.O. BOX 1837 TACOMA, WA 98401 (253)383-5841

kpff
2407 North 31st Street, Suite 100
Tacoma, Washington 98407
(253) 396-0150 Fax (253) 396-0162

MARK:	REVISION:	BY:	APPR:	DATE:
1	ADDENDUM #4	CMB		6/5

STATE OF WASHINGTON MADE KING SEY 32791 REGISTERED PROFESSIONAL ENGINEER

CMB	5/7/2018	
CHECKED BY	DATE	
SWK	5/9/2018	
PROJ. ENGR	DATE	
Jun 06, 2018		
cbennett		

APPROVED:

DIRECTOR, ENG. DATE

PRINTED BY: cbennett Jun 06, 2018

PORT ADDRESS: ONE SITCUM PLAZA TACOMA WA, 98401-1837

PARCEL 77 AUTO IMPORT TERMINAL

SOUTH DRIVEWAY
SITE PLAN

TOWNSHIP: 21N	RANGE: 3E	SECTION: 36	
DAT-HRZ: W83-SF	VERT: PORT OF TACOMA BM#		
PARCEL: MULTIPLE	DRAWING SCALE: AS SHOWN		

C1.14

44 OF 163

CONT/CONS:	070770
M. ID:	201020.01
PHASE:	BID SET

THIS DRAWING IS THE PROPERTY OF THE PORT OF TACOMA AND SHALL NOT BE USED ON OTHER WORK, DISCLOSED, COPIED, IN WHOLE OR IN PART, WITHOUT WRITTEN PERMISSION

PORT OF TACOMA FILE: N:\2017\1700082 Automobile Import Terminal Planning\Part 3 - KPFF Design\3.13 Drawings\Current\30pc Design\C1.12-C1.14 SITE PLANS
BINDING EDGE

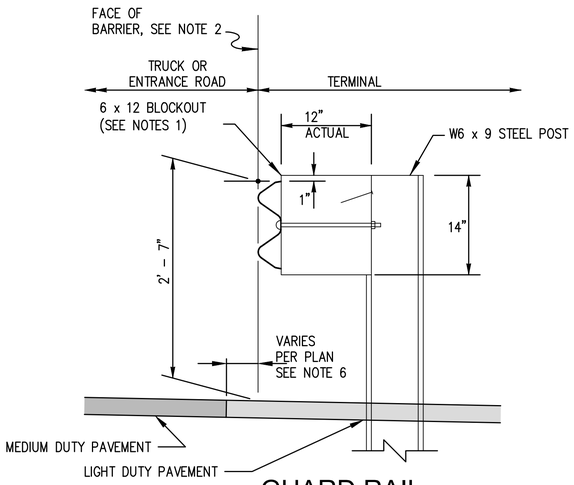

A GUARD RAIL WITHIN PAVEMENT SECTION
C1.17 NTS

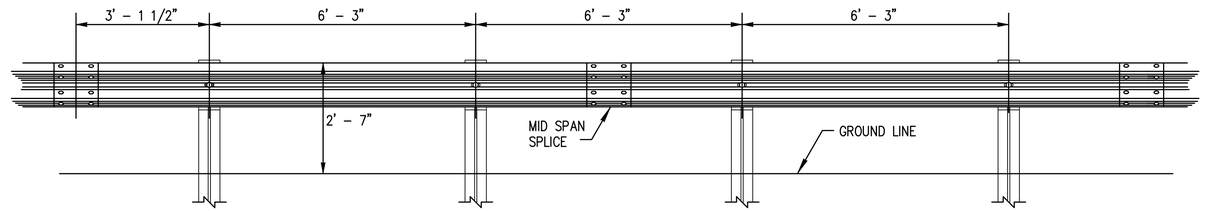

ELEVATION

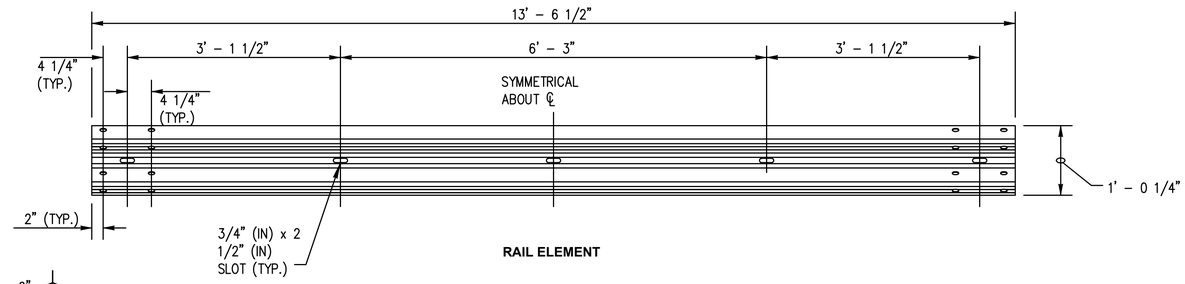

RAIL ELEMENT

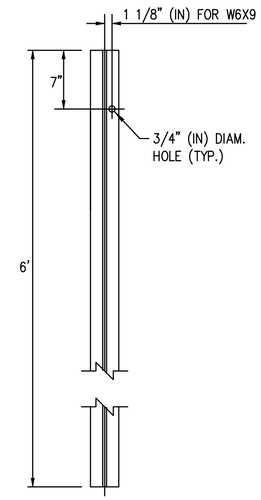

STEEL POST

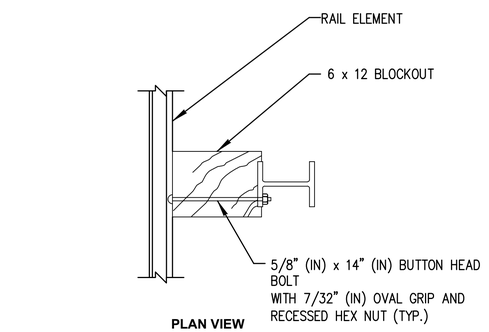

PLAN VIEW

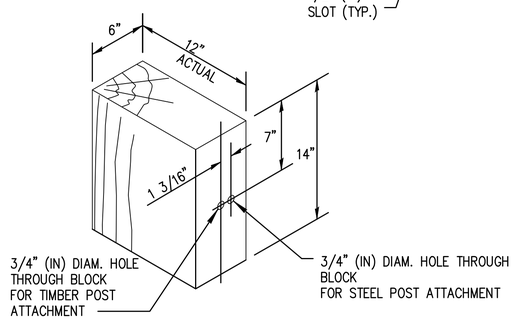

WOOD BLOCK

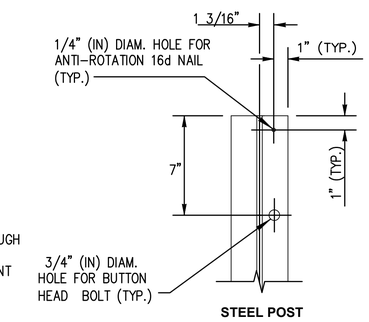

STEEL POST

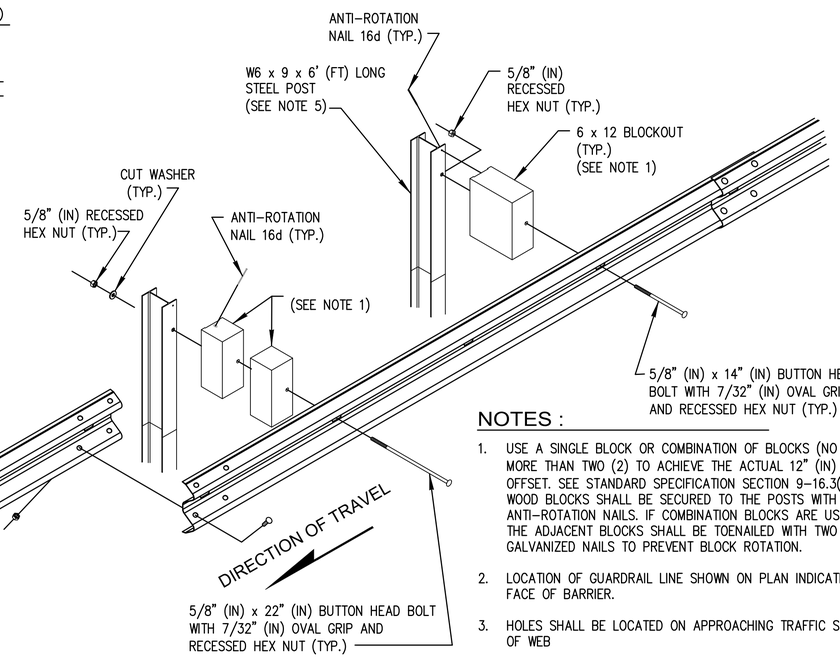

ISOMETRIC VIEW

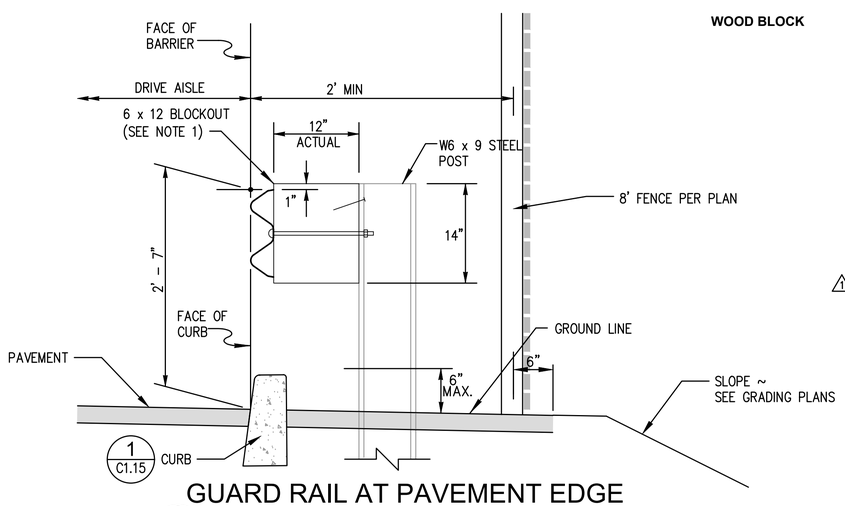

B GUARD RAIL AT PAVEMENT EDGE SECTION
C1.17 NTS

1 GUARD RAIL DETAIL
C1.17 NTS

NOTES :

1. USE A SINGLE BLOCK OR COMBINATION OF BLOCKS (NO MORE THAN TWO (2) TO ACHIEVE THE ACTUAL 12" (IN) OFFSET. SEE STANDARD SPECIFICATION SECTION 9–16.3(2). WOOD BLOCKS SHALL BE SECURED TO THE POSTS WITH ANTI–ROTATION NAILS. IF COMBINATION BLOCKS ARE USED, THE ADJACENT BLOCKS SHALL BE TOENAILED WITH TWO 16D GALVANIZED NAILS TO PREVENT BLOCK ROTATION.
2. LOCATION OF GUARDRAIL LINE SHOWN ON PLAN INDICATES FACE OF BARRIER.
3. HOLES SHALL BE LOCATED ON APPROACHING TRAFFIC SIDE OF WEB
4. AT BEGINNING AND END OF EACH GUARDRAIL SEGMENT CONSTRUCT END SECTION, DESIGN, IN ACCORDANCE WITH WSDOT STANDARD PLAN C–7.
5. GUARD RAIL MATERIALS SHALL CONFORM TO WSDOT STANDARD SPECIFICATION SECTION 8–11.2.
6. GUARD RAIL POST LOCATED WITHIN MEDIUM DUTY PAVEMENT AT NORTH END OF SITE.

Port of Tacoma
P.O. BOX 1837 TACOMA, WA 98401 (253)383-5841

kpff
2407 North 31st Street, Suite 100
Tacoma, WA 98407
(253) 396-0130 Fax (253) 396-0162

MARK:	REVISION:	BY:	APPR:	DATE:
1	ADDENDUM #4	CMB		6/5

STATE OF WASHINGTON
MADE KING SEY
32791
REGISTERED PROFESSIONAL ENGINEER
5/9/18

CMB	5/7/2018		
CHECKED BY	DATE		
SWK	5/9/2018		
PROJ. ENGR	DATE		
cbennett Jun 06, 2018			
PRINTED BY:			
PORT ADDRESS: ONE SITCUM PLAZA			
TACOMA WA, 98401-1837			

APPROVED:

DIRECTOR ENG. DATE

PARCEL 77 AUTO IMPORT TERMINAL

SITE DETAILS

C1.17

47 OF 163

CONT/CONS:	070770	TOWNSHIP: 21N	RANGE: 3E
M. ID:	201020.01	DAT–HRZ: W83-SF	VERT: PORT OF TACOMA BM#
PHASE:	BID SET	PARCEL: MULTIPLE	DRAWING SCALE: AS SHOWN

SECTION: 36

THIS DRAWING IS THE PROPERTY OF THE PORT OF TACOMA AND SHALL NOT BE USED ON OTHER WORK, DISCLOSED, COPIED, IN WHOLE OR IN PART, WITHOUT WRITTEN PERMISSION

PORT OF TACOMA FILE: N:\2017\1700082 Automobile Import Terminal Planning\Part 3 - KPFF Design\3.13 Drawings\Current\30pc Design\C1.15-C1.19 SITE DETAILS

BINDING EDGE