PORT OF TACOMA

WEST HYLEBOS LOG DOCK REPAIRS
PROJECT NO. 201016.01
CONTRACT NO. 070636

PORT COMMISSIONERS:

CONSTANCE T. BACON
DON MEYER
DONALD C. JOHNSON
RICHARD P. MARZANO
CLARE PETRICH

PORT STAFF:

JOHN WOLFE
Chief Executive Officer

DAKOTA CHAMBERLAIN, PE
Chief Facilities
Development Officer

JANE VANDENBERG, PE
Director of Engineering

PEDRO REYES, PE
Project Manager

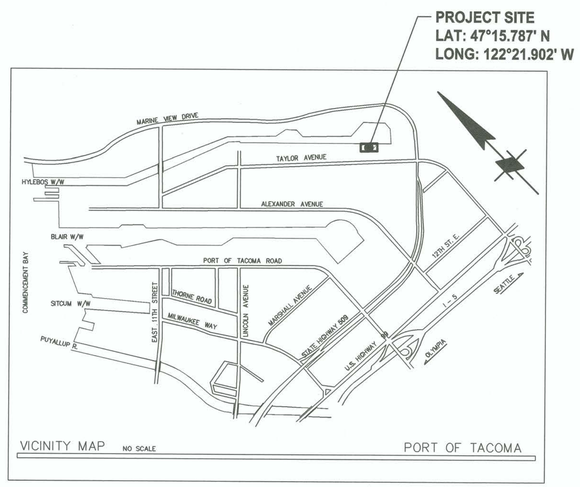

VICINITY MAP NO SCALE PORT OF TACOMA

CONSULTANT:

moffatt & nichol
600 UNIVERSITY STREET, SUITE# 610
SEATTLE, WA 98101
(206) 622-0222

SHEET LEGEND

SHEET DESIGNATION	SHEET #	SHEET TITLE
G1	1	COVER SHEET & DRAWING LIST
G2	2	GENERAL NOTES, ABBREVIATIONS, & LEGEND
C1	3	SITE PLAN
S1	4	REPAIR PLAN BENTS 1 TO 38
S2	5	REPAIR PLAN BENTS 39 TO 77
S3	6	REPAIR PLAN BENTS 78 TO 113
S4	7	REPAIR DETAILS SHEET 1
S5	8	REPAIR DETAILS SHEET 2
S6	9	REPAIR DETAILS SHEET 3
S7	10	SITE PHOTOGRAPHS

REFERENCE DRAWINGS

SHEET DESIGNATION	SHEET #	SHEET TITLE
1691-S50-F	11	TACOMA SORTING YARD WHARF-PILING PLAN
1691-S49-E	12	TACOMA SORTING YARD WHARF-PILING PLAN
1691-S53-E	13	TACOMA SORTING YARD WHARF TYP. CROSS SECT. & DETS.

BINDING EDGE

File: P:\9648-03\CADD_Active_SheetSet\201016.01_G1; Plotted: 7/20/2017 5:51 PM by SZARVADI, ANDRA

Port of Tacoma
P.O. BOX 1837 TACOMA, WA 98401 (253)383-5841

moffatt & nichol

MARK:	REVISION:	BY:	APPR:	DATE:

STATE OF WASHINGTON REGISTERED PROFESSIONAL ENGINEER 22933 OSTBO 07/21/2017

APPROVED: B.OSTBO 7/21/17
CHECKED BY DATE
DIRECTOR ENGR DATE
B.HALEY 7/21/17
PROJ. ENGR DATE
PRINTED BY: oszarvadi Jul 20, 2017
PORT ADDRESS: ONE SITCUM PLAZA
TACOMA, WA 98401-1837

PORT OF TACOMA
WEST HYLEBOS LOG DOCK REPAIRS
COVER SHEET & DRAWING LIST

6570
G1
1 OF 10

CONT/CONS: 070636	TOWNSHIP: 21N	RANGE: 03E	SECTION: 36
M. ID: 201016.01	DAT-HRZ: WA83-SF	VERT: MLLW 19.39' @ Tide 22 1933	
PHASE: BID SET	PARCEL:	DRAWING SCALE: AS NOTED	

THIS DRAWING IS THE PROPERTY OF THE PORT OF TACOMA AND SHALL NOT BE USED ON OTHER WORK, DISCLOSED, COPIED, IN WHOLE OR IN PART, WITHOUT WRITTEN PERMISSION

BINDING EDGE

GENERAL NOTES:

1. THE CONTRACTOR SHALL COORDINATE THE WORK OF ALL TRADES.
2. IN THE EVENT OF CONFLICTING REQUIREMENTS BETWEEN THE CONTRACT DRAWINGS, GENERAL NOTES, AND SPECIFICATIONS, REFER TO DIVISION 00 OF THE CONTRACT SPECIFICATIONS FOR GUIDANCE.
3. THE CONTRACTOR SHALL ENSURE ALL PERMITS REQUIRED BY ANY FEDERAL, STATE, OR LOCAL DEPARTMENTS, UTILITY COMPANIES, OR JURISDICTIONS AFFECTED BY THE WORK ARE OBTAINED.
4. THESE NOTES CONTAIN GENERAL INFORMATION AND ARE NOT ALL–INCLUSIVE. CONTRACTOR SHALL VERIFY INFORMATION GIVEN HEREIN WITH SPECIFICATIONS AND OTHER DOCUMENTS AND BRING ANY CONFLICTS TO THE ATTENTION OF THE PORT BEFORE BEGINNING AFFECTED WORK.
5. CONTRACTOR SHALL VERIFY ALL DIMENSIONS AND CONDITIONS FOR COMPATIBILITY BEFORE PROCEEDING. ANY DISCREPANCIES IN DIMENSIONS OR SITE CONDITIONS SHALL BE BROUGHT TO THE ATTENTION OF THE PORT BEFORE PROCEEDING. THE CONTRACTOR SHALL NOT BEGIN CONSTRUCTION UNTIL THE DISCREPANCY HAS BEEN RESOLVED BY THE PORT.
6. THE CONTRACTOR SHALL PLACE CONSTRUCTION DEBRIS CONTROL DEVICES AS NECESSARY TO PREVENT DEBRIS FROM ENTERING THE WATER, AND AIRBORNE MATERIALS FROM LEAVING THE IMMEDIATE VICINITY OF THE SITE. THE CONTRACTOR SHALL BE RESPONSIBLE FOR CLEANUP OF ANY MATERIALS DEPOSITED OUTSIDE AND WITHIN THE WORK AREA.
7. THE CONTRACTOR SHALL DISPOSE OF ALL HAZARDOUS/NON–HAZARDOUS AND REGULATED/NON–REGULATED DEBRIS OFF THE PROJECT SITE IN A PERMITTED LANDFILL.
8. COORDINATE ACCESS TO THE SITE WITH THE PORT.
9. CONTRACTOR–INITIATED CHANGES SHALL BE SUBMITTED IN WRITING TO THE ENGINEER FOR APPROVAL PRIOR TO FABRICATION OR CONSTRUCTION. CHANGES SHOWN ON SHOP DRAWINGS ONLY WILL NOT SATISFY THIS REQUIREMENT.
10. CONTRACTOR SHALL BE RESPONSIBLE FOR ERECTION STABILITY AND TEMPORARY SUPPORT AS NECESSARY.
11. CONTRACTOR SHALL BE RESPONSIBLE TO PROTECT ALL EXISTING SURFACES OR STRUCTURES THAT WILL REMAIN.
12. ALL FEDERAL, STATE, AND LOCAL SAFETY REGULATIONS SHALL BE FOLLOWED. METHODS OF DEMOLITION, CONSTRUCTION, AND ERECTION ARE THE CONTRACTOR'S RESPONSIBILITY.
13. THE CONTRACTOR SHALL ABIDE BY ALL APPLICABLE FEDERAL, STATE, AND LOCAL ENVIRONMENTAL PROTECTION STANDARDS, PERMITS, LAWS, AND REGULATIONS.

CODES AND STANDARDS:

ALL WORK SHALL CONFORM TO THE MINIMUM REQUIREMENTS OF THE FOLLOWING CODES AND STANDARDS. CODES AND STANDARDS SHALL BE THE LATEST EDITION AVAILABLE AS OF THE DATE OF THE INVITATION TO BID, UNLESS OTHERWISE SPECIFIED.

1. THE INTERNATIONAL BUILDING CODE (IBC), 2012 EDITION.
2. ALL STEEL WORK SHALL BE IN ACCORDANCE WITH THE AMERICAN INSTITUTE OF STEEL CONSTRUCTION (AISC), STEEL CONSTRUCTION MANUAL, 14TH EDITION.
3. ANSI/AISC 360, SPECIFICATIONS FOR STRUCTURAL STEEL BUILDINGS.
4. THE WASHINGTON STATE DEPARTMENT OF TRANSPORTATION (WSDOT) STANDARD SPECIFICATIONS FOR ROAD, BRIDGE, & MUNICIPAL CONSTRUCTION (STANDARD SPECIFICATIONS), 2016 EDITION.
5. AMERICAN CONCRETE INSTITUTE (ACI) 318 BUILDING CODE REQUIREMENTS FOR STRUCTURAL CONCRETE & COMMENTARY.

TIDAL DATA:

REFERENCE: ELEVATIONS OF TIDAL DATUMS REFERRED TO MLLW IN US FEET, AT STATION 9446484 BASED ON TIDAL EPOCH 1983–2001:

EHW:	+14.55 FEET
MHHW:	+11.80 FEET
MHW:	+10.92 FEET
MLW:	+2.86 FEET
MLLW:	0.00 FEET
ELW:	–4.70 FEET

MATERIALS:

WOOD PRESERVATION TREATMENT

1. ALL TIMBER SHALL BE CUT TO LENGTH AND DRILLED PRIOR TO PRESERVATIVE TREATMENT.
2. CUTS MADE IN THE FIELD SHALL BE TREATED WITH COPPER NAPHTHENATE–BASED SOLUTION IN ACCORDANCE WITH AWPA STANDARD M4. THE PRESERVATIVES CONCENTRATION SHALL CONTAIN NO LESS THAN 2 PERCENT COPPER METAL, FIELD TREATMENT SHALL BE BY BRUSHING, DIPPING OR SOAKING AND SHALL BE DONE IN A MANNER THAT THE PRESERVATIVE DOES NOT DRIP OR SPILL ON THE GROUND OR IN THE WATER.

STEEL

1. ALL STEEL WORK SHALL BE IN ACCORDANCE WITH AISC SPECIFICATIONS FOR DESIGN, FABRICATION AND ERECTION OF STRUCTURAL STEEL FOR BUILDINGS (AISC). STEEL MATERIALS SHALL CONFORM TO THE FOLLOWING, UNLESS OTHERWISE NOTED.
   a. MISC. PLATES, BARS, AND SHAPES: ASTM A36, UNO
   b. THREADED RODS: ASTM A36
   c. BOLTS: NUTS, AND WASHERS: ASTM A307 (CARBON STEEL)
   d. NAILS: ASTM F1667
2. EXCEPT AS NOTED, ALL STEEL SHAPES PLATES, OTHER FABRICATIONS, AND ALL HARDWARE SHALL BE HOT DIP GALVANIZED AFTER FABRICATION IN ACCORDANCE WITH THE SPECIFICATIONS.

CONCRETE

1. ALL CONCRETE WORK SHALL BE PERFORMED IN ACCORDANCE WITH ACI 301, UNLESS OTHERWISE STATED.
2. ALL CONCRETE SHALL BE NORMAL WEIGHT CONCRETE (145 PCF), MINIMUM.
3. ALL DETAILING, FABRICATION, AND ERECTION OF REINFORCING STEEL SHALL CONFORM TO ACI SP–66(04), ACI DETAILING MANUAL.
4. CONCRETE MATERIALS SHALL CONFORM TO THE FOLLOWING UNLESS OTHERWISE NOTED.

a. CONCRETE TYPE:	28 DAY STRENGTH:
CAST–IN–PLACE CONCRETE	5,000 PSI
b. REINFORCING STEEL:	
#6 AND LARGER	ASTM A706, GRADE 60
#5 AND SMALLER	ASTM A615, OR A706, GRADE 60

5. SEE SPECIFICATIONS FOR FINISHES ON ALL EXPOSED CONCRETE SURFACES.

PORT–FURNISHED TIMBER PILES

1. PORT–FURNISHED TIMBER PILES ARE COAST DOUGLAS FIR IN ACCORDANCE WITH ASTM D25 AND ACZA–TREATED. COORDINATE PILE PICK–UP LOCATION AND LOGISTICS WITH THE PORT.

PORT–FURNISHED PILES:

MIN BUTT DIA (IN)	MIN LENGTH (FT)	QUANTITY	PURPOSE
18	95	1	PILE 30:B
18	85	1	PILE 54:A
14	80	28	DOLPHIN PILING

REFERENCE DRAWINGS:

1. FOR REFERENCE: UPLAND GEOTECHNICAL BORINGS, TEST PILE INFORMATION AND WHARF SECTION AND DETAILS ARE PROVIDED, SEE THE REFERENCE DRAWINGS INCLUDED WITH THIS DRAWING SET.

REFERENCE CALLOUTS:

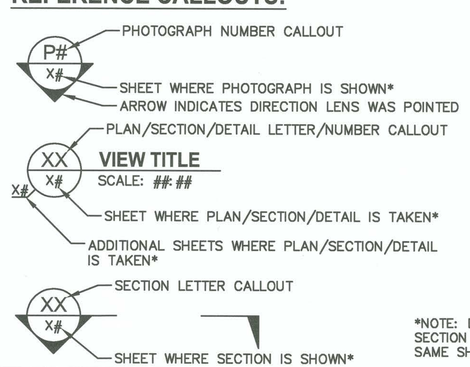

*NOTE: DASH (–) INDICATES SECTION OR DETAIL FROM SAME SHEET

ABBREVIATIONS:

'	FEET
"	INCHES
±	PLUS OR MINUS
∠	ANGLE
@	AT
#	NUMBER
ACZA	AMMONIACAL COPPER ZINC ARSENATE
ANSI	AMERICAN NATIONAL STANDARDS INSTITUTE
APPROX	APPROXIMATE
ASTM	AMERICAN SOCIETY FOR TESTING AND MATERIALS
AWPA	AMERICAN WOOD PROTECTION ASSOCIATION
CIP	CAST–IN–PLACE
CLR	CLEAR
CONC	CONCRETE
DIA, ø	DIAMETER
EA	EACH
EHW	EXTREME HIGH WATER
ELEV	ELEVATION
ELW	EXTREME LOW WATER
EQ	EQUAL
EW	EACH WAY
(E)	EXISTING
FT	FEET
IN	INCH
L	LOWER
LAM	LAMINATED
LAT	LATITUDE
LONG	LONGITUDE
MHW	MEAN HIGH WATER
MHHW	MEAN HIGHER HIGH WATER
MIN	MINIMUM
MISC	MISCELLANEOUS
MLW	MEAN LOW WATER
MLLW	MEAN LOWER LOW WATER
(N)	NEW
NTS	NOT TO SCALE
OC	ON CENTER
OPP	OPPOSITE
PCF	POUNDS PER CUBIC FOOT
PE	POLYETHYLENE
PIP	PROTECT–IN–PLACE
PSI	POUNDS PER SQUARE INCH
R	RADIUS
REINF	REINFORCEMENT OR REINFORCED
REQ'D	REQUIRED
SIM	SIMILAR
SPA	SPACES
SPECS	SPECIFICATIONS
SS	STAINLESS STEEL
TEMP	TEMPORARY
THRU	THROUGH
TYP	TYPICAL
U	UPPER
UHMW	ULTRA–HIGH MOLECULAR WEIGHT
UNO	UNLESS NOTED OTHERWISE
W	WATER, WIDTH OR WEST
w/	WITH

Port of Tacoma
P.O. BOX 1837 TACOMA, WA 98401 (253)383-5841

moffatt & nichol

MARK:	REVISION:	BY:	APPR:	DATE:

STATE OF WASHINGTON
JOSHUA L. OSTBO
23594
REGISTERED PROFESSIONAL ENGINEER
07/21/2017

APPROVED:
DIRECTOR ENG: 8/14/17 DATE
B.OSTBO 7/21/17
CHECKED BY DATE
B.HALEY 7/21/17
PROJ. ENGR DATE
PRINTED BY: aszarvadi Jul 20, 2017
PORT ADDRESS: ONE SITCUM PLAZA, TACOMA, WA 98401-1837

PORT OF TACOMA
WEST HYLEBOS LOG DOCK REPAIRS
GENERAL NOTES, ABBREVIATIONS, & LEGEND

TOWNSHIP: 21N | RANGE: 03E | SECTION: 36
DAT–HRZ: WA83–SF | VERT: MLLW 19.39' @ Tide 22 1933
DRAWING SCALE: AS NOTED

6570
G2
2 OF 10

CONT/CONS: 070636
M. ID: 201016.01
PHASE: BID SET
PARCEL:

THIS DRAWING IS THE PROPERTY OF THE PORT OF TACOMA AND SHALL NOT BE USED ON OTHER WORK, DISCLOSED, COPIED, IN WHOLE OR IN PART, WITHOUT WRITTEN PERMISSION

File: P:\9648-03\CADD_Active_SheetSet\201016.01_G2; Plotted: 7/20/2017 5:52 PM by SZARVADI, ANDRA

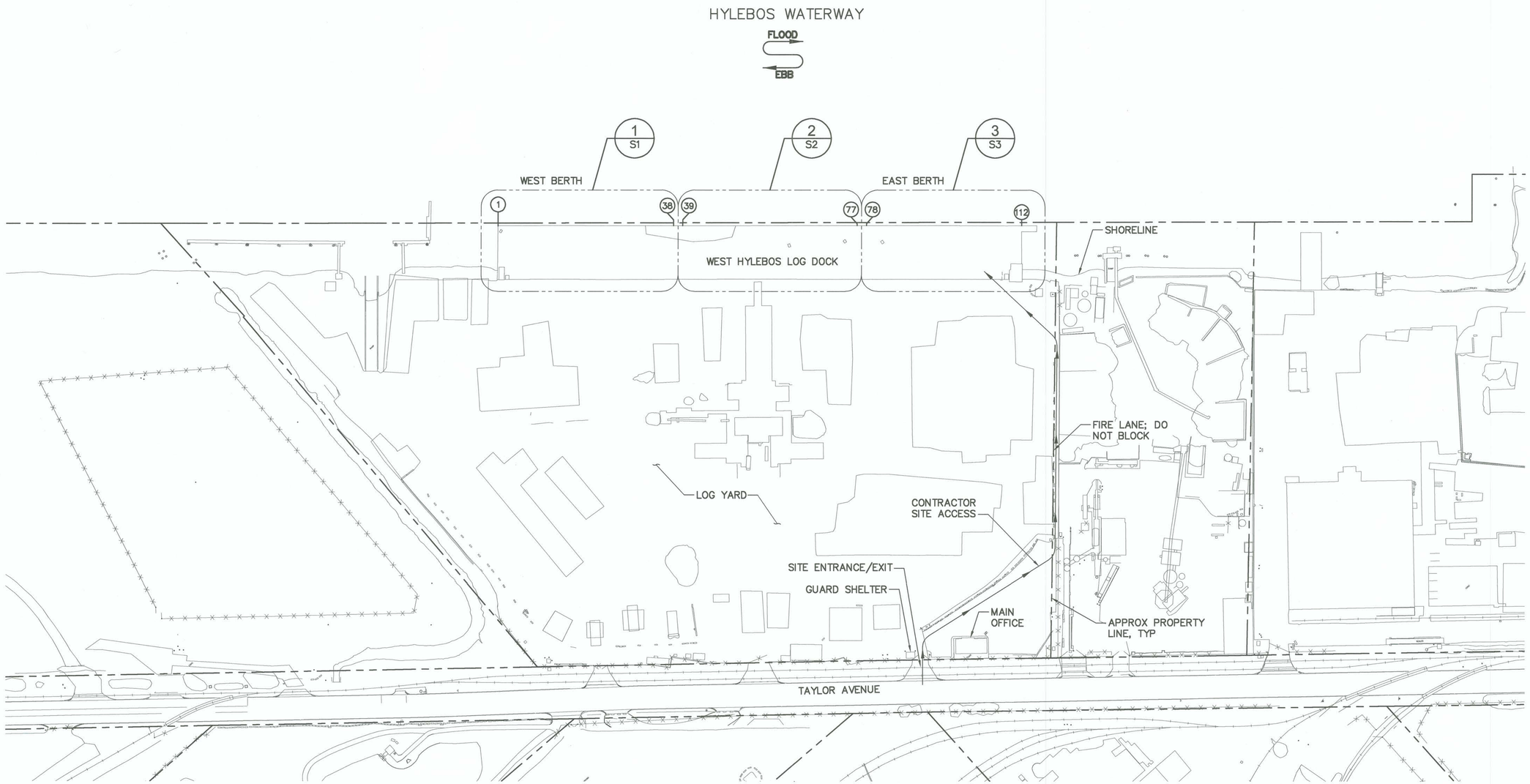

SITE PLAN

SCALE: 1" = 100'

CONSTRUCTION NOTES:

1. VESSEL CALLS ARE TYPICALLY BETWEEN THE 15TH AND 25TH OF ANY GIVEN MONTH. THE BERTH AND UPLAND AREAS ARE UNAVAILABLE FOR STORAGE, STAGING, AND CONSTRUCTION DURING THE VESSEL CALL WINDOW.
2. THE CONTRACTOR SHALL NOT START WORK ON A DOLPHIN THAT CANNOT BE FULLY RESTORED PRIOR TO THE VESSEL CALL. EXISTING DOLPHINS MAY REMAIN IN THEIR PRE-AWARD CONDITION DURING VESSEL CALLS.

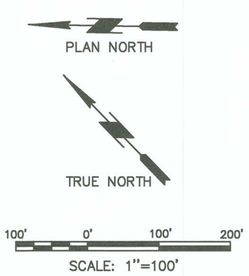

Port of Tacoma
P.O. BOX 1837 TACOMA, WA 98401 (253)383-5841

moffatt & nichol

MARK:	REVISION:	BY:	APPR:	DATE:

STATE OF WASHINGTON
BRIAN OSTBO
STRUCTURAL
PROFESSIONAL ENGINEER
07/21/2017

APPROVED:

B.OSTBO 7/21/17
CHECKED BY DATE

B.HALEY 7/21/17
DIRECTOR ENG. DATE PROJ. ENGR DATE

PRINTED BY: aszarvadi Jul 20, 2017
PORT ADDRESS: ONE SITCUM PLAZA
TACOMA, WA 98401-1837

PORT OF TACOMA
WEST HYLEBOS LOG DOCK REPAIRS
SITE PLAN

6570
C1
3 OF 10

CONT/CONS: 070636	TOWNSHIP: 21N	RANGE: 03E	SECTION: 36
M. ID: 201016.01	DAT-HRZ: WA83-SF	VERT: MLLW 19.39' @ Tide 22 1933	
PHASE: BID SET	PARCEL:	DRAWING SCALE: AS NOTED	

THIS DRAWING IS THE PROPERTY OF THE PORT OF TACOMA AND SHALL NOT BE USED ON OTHER WORK, DISCLOSED, COPIED, IN WHOLE OR IN PART, WITHOUT WRITTEN PERMISSION

BINDING EDGE
File: P:\9648-03\CADD_Active_SheetSet\201016.01_C1; Plotted: 7/20/2017 5:57 PM by SZARVADI, ANDRA

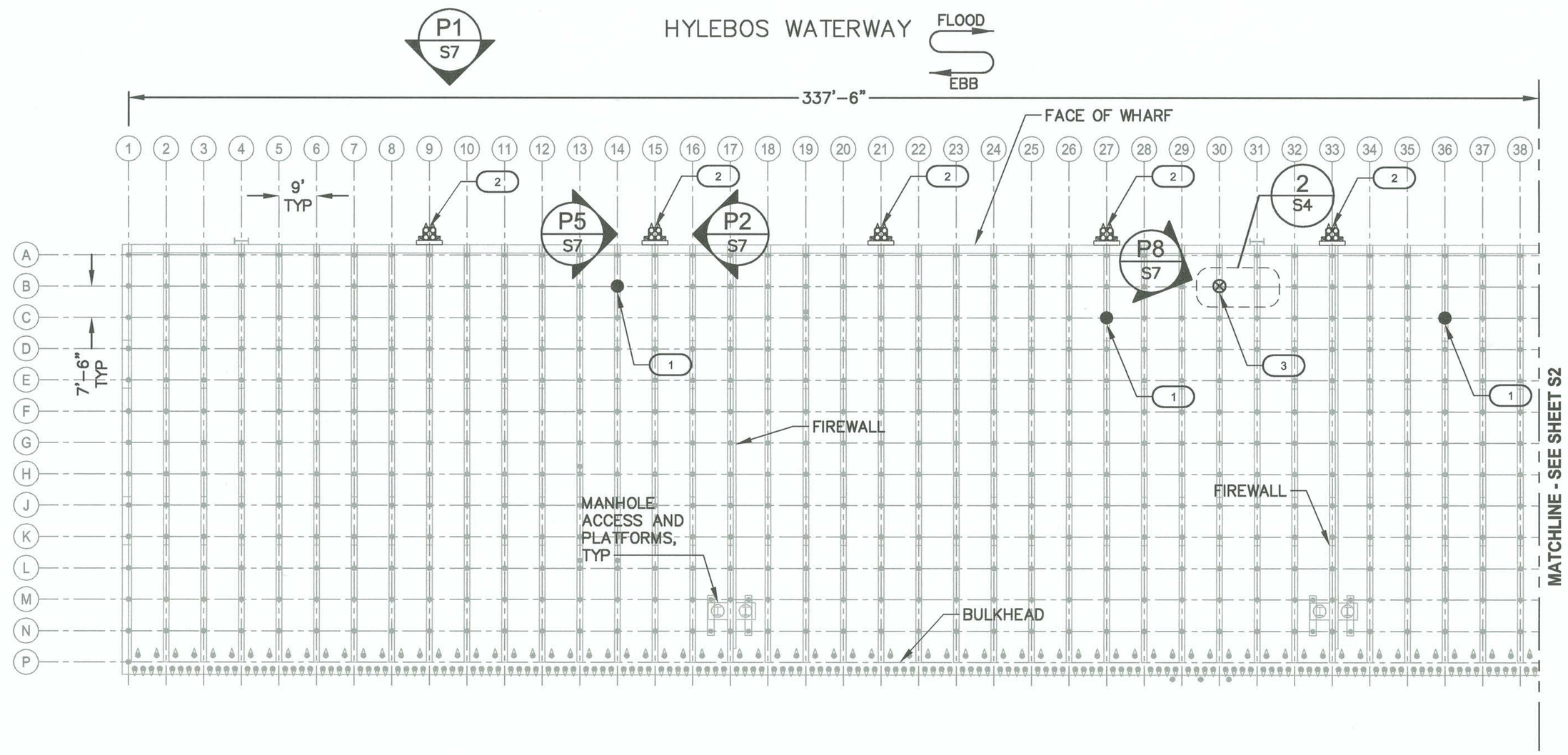

1 / C1 REPAIR PLAN BENTS 1 TO 38

SCALE: 1"=20'

LEGEND

- TIMBER PILE
- TIMBER BATTER PILE
- (1) BENT DESIGNATION
- (A) ROW DESIGNATION
- ● RESTORE BEARING OF MISALIGNED PILE
- ⊗ REPLACE EXISTING BEARING PILE

KEY NOTES:

1. RESTORE BEARING OF MISALIGNED PILE. SEE SHEET S4, DETAIL 4.
2. BREASTING DOLPHIN REPAIRS, SEE SHEET S6.
3. REPLACE MISSING BEARING PILE, SEE SHEET S4, DETAIL 3.

KEY PLAN
NTS

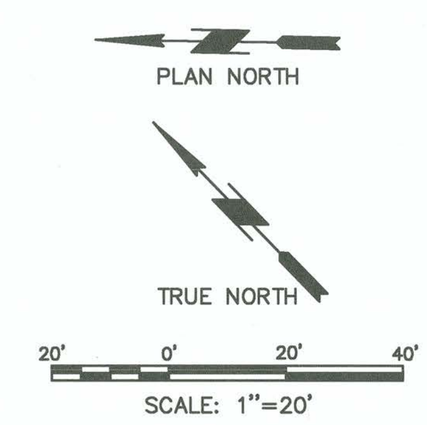

SCALE: 1"=20'

BINDING EDGE

File: P:\9648-03\CADD_Active_SheetSet\201016.01_S1, Plotted: 7/20/2017 5:53 PM by SZARVADI, ANDRA

Port of Tacoma
P.O. BOX 1837 TACOMA, WA 98401 (253)383-5841

moffatt & nichol

MARK:	REVISION:	BY:	APPR:	DATE:

07/21/2017

APPROVED:
DIRECTOR ENG. DATE

B.OSTBO 7/21/17
CHECKED BY DATE
B.HALEY 7/21/17
PROJ. ENGR DATE

PRINTED BY: aszarvadi Jul 20, 2017
PORT ADDRESS: ONE SITCUM PLAZA, TACOMA, WA 98401-1837

PORT OF TACOMA
WEST HYLEBOS LOG DOCK REPAIRS
REPAIR PLAN
BENTS 1 TO 38

6570
S1
4 OF 10

CONT/CONS: 070636	TOWNSHIP: 21N	RANGE: 03E	SECTION: 36
M. ID: 201016.01	DAT-HRZ: WA83-SF	VERT: MLLW 19.39' @ Tide 22 1933	
PHASE: BID SET	PARCEL:	DRAWING SCALE: AS NOTED	

THIS DRAWING IS THE PROPERTY OF THE PORT OF TACOMA AND SHALL NOT BE USED ON OTHER WORK, DISCLOSED, COPIED, IN WHOLE OR IN PART, WITHOUT WRITTEN PERMISSION

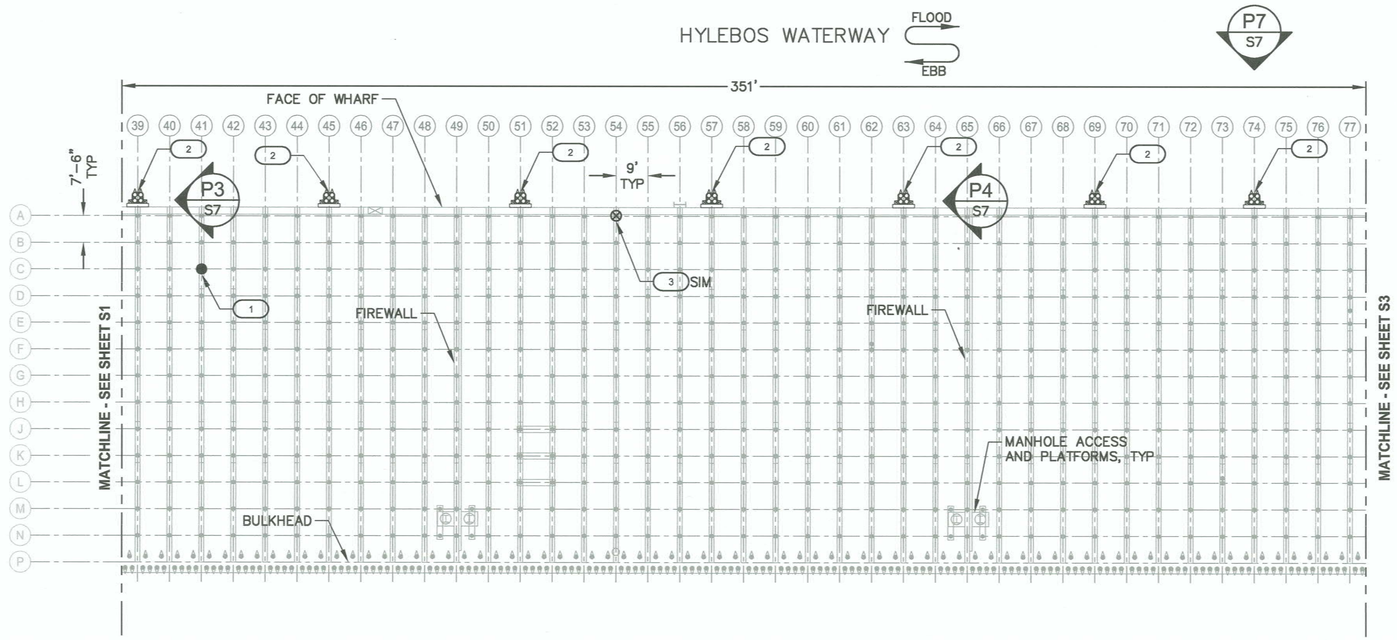

2 / C1 REPAIR PLAN BENTS 39 TO 77

SCALE: 1"=20'

LEGEND

- TIMBER PILE
- TIMBER BATTER PILE
- (1) BENT DESIGNATION
- (A) ROW DESIGNATION
- ● RESTORE BEARING OF MISALIGNED PILE
- ⊗ REPLACE EXISTING BEARING PILE

KEY NOTES:

1. RESTORE BEARING OF MISALIGNED PILE. SEE SHEET S4, DETAIL 4.
2. BREASTING DOLPHIN REPAIRS, SEE SHEET S6.
3. REPLACE MISSING BEARING PILE, SEE SHEET S4, DETAIL 3.

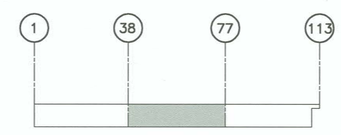

KEY PLAN
NTS

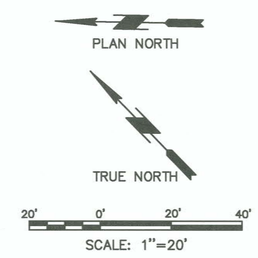

SCALE: 1"=20'

Port of Tacoma
P.O. BOX 1837 TACOMA, WA 98401 (253)383-5841

moffatt & nichol

MARK:	REVISION:	BY:	APPR:	DATE:

B. OSTBO 7/21/17
CHECKED BY DATE
B. HALEY 7/21/17
PROJ. ENGR DATE
APPROVED:
DIRECTOR ENG DATE

PRINTED BY: aszarvadi Jul 20, 2017
PORT ADDRESS: ONE SITCUM PLAZA, TACOMA, WA 98401-1837

PORT OF TACOMA
WEST HYLEBOS LOG DOCK REPAIRS
REPAIR PLAN
BENTS 39 TO 77

TOWNSHIP: 21N	RANGE: 03E	SECTION: 36	
DAT-HRZ: WA83-SF	VERT: MLLW 19.39' @ Tide 22 1933		
PARCEL:	DRAWING SCALE: AS NOTED		

6570
S2
5 OF 10

CONT/CONS: 0706.36
M. ID: 201016.01
PHASE: BID SET

THIS DRAWING IS THE PROPERTY OF THE PORT OF TACOMA AND SHALL NOT BE USED ON OTHER WORK, DISCLOSED, COPIED, IN WHOLE OR IN PART, WITHOUT WRITTEN PERMISSION

BINDING EDGE

File: P:\9648-03\CADD_Active_SheetSet\201016.01_S2; Plotted: 7/20/2017 5:54 PM by SZARVADI, ANDRA

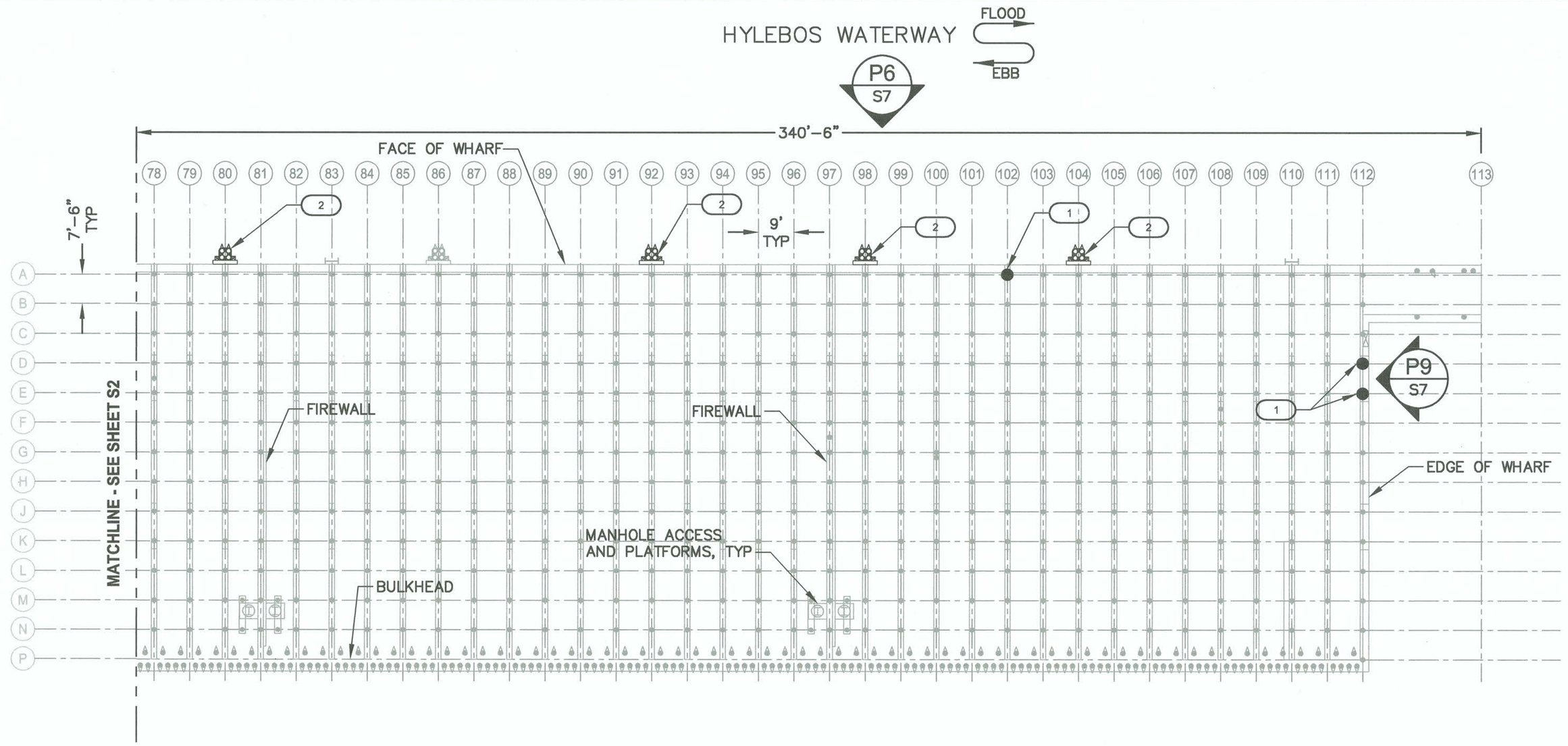

3 / C1 REPAIR PLAN BENTS 78 TO 113

SCALE: 1"=20'

LEGEND

- TIMBER PILE
- TIMBER BATTER PILE
- (1) BENT DESIGNATION
- (A) ROW DESIGNATION
- RESTORE BEARING OF MISALIGNED PILE
- REPLACE EXISTING BEARING PILE

KEY NOTES:

(1) RESTORE BEARING OF MISALIGNED PILE. SEE SHEET S4, DETAIL 4.

(2) BREASTING DOLPHIN REPAIRS, SEE SHEET S6.

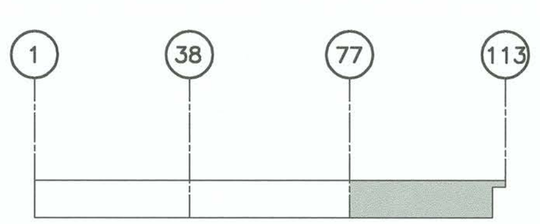

KEY PLAN
NTS

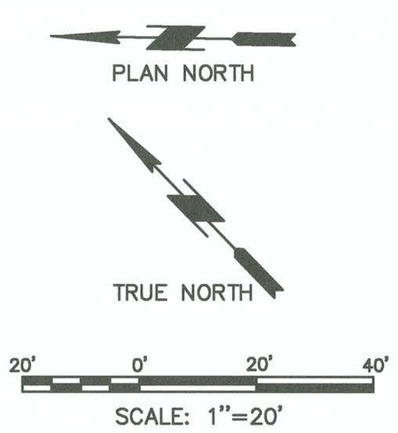

Port of Tacoma
P.O. BOX 1837 TACOMA, WA 98401 (253)383-5841

moffatt & nichol

MARK:	REVISION:	BY:	APPR:	DATE:

07/21/2017

APPROVED:
DIRECTOR ENG. DATE

B.OSTBO 7/21/17
CHECKED BY DATE
B.HALEY 7/21/17
PROJ. ENGR DATE

PRINTED BY: aszarvadi Jul 20, 2017
PORT ADDRESS: ONE SITCUM PLAZA
TACOMA, WA 98401-1837

PORT OF TACOMA
WEST HYLEBOS LOG DOCK REPAIRS
REPAIR PLAN
BENTS 78 TO 113

TOWNSHIP: 21N | RANGE: 03E | SECTION: 36
DAT-HRZ: WA83-SF | VERT: MLLW 19.39' @ Tide 22 1933
PARCEL: | DRAWING SCALE: AS NOTED

6570
S3
6 OF 10

CONT/CONS: 0706.36
M. ID: 201016.01
PHASE: BID SET

THIS DRAWING IS THE PROPERTY OF THE PORT OF TACOMA AND SHALL NOT BE USED ON OTHER WORK, DISCLOSED, COPIED, IN WHOLE OR IN PART, WITHOUT WRITTEN PERMISSION

BINDING EDGE

File: P:\96418-03\CADD_Active_SheetSet\201016.01_S3; Plotted: 7/20/2017 5:55 PM by SZARVADI, ANDRA

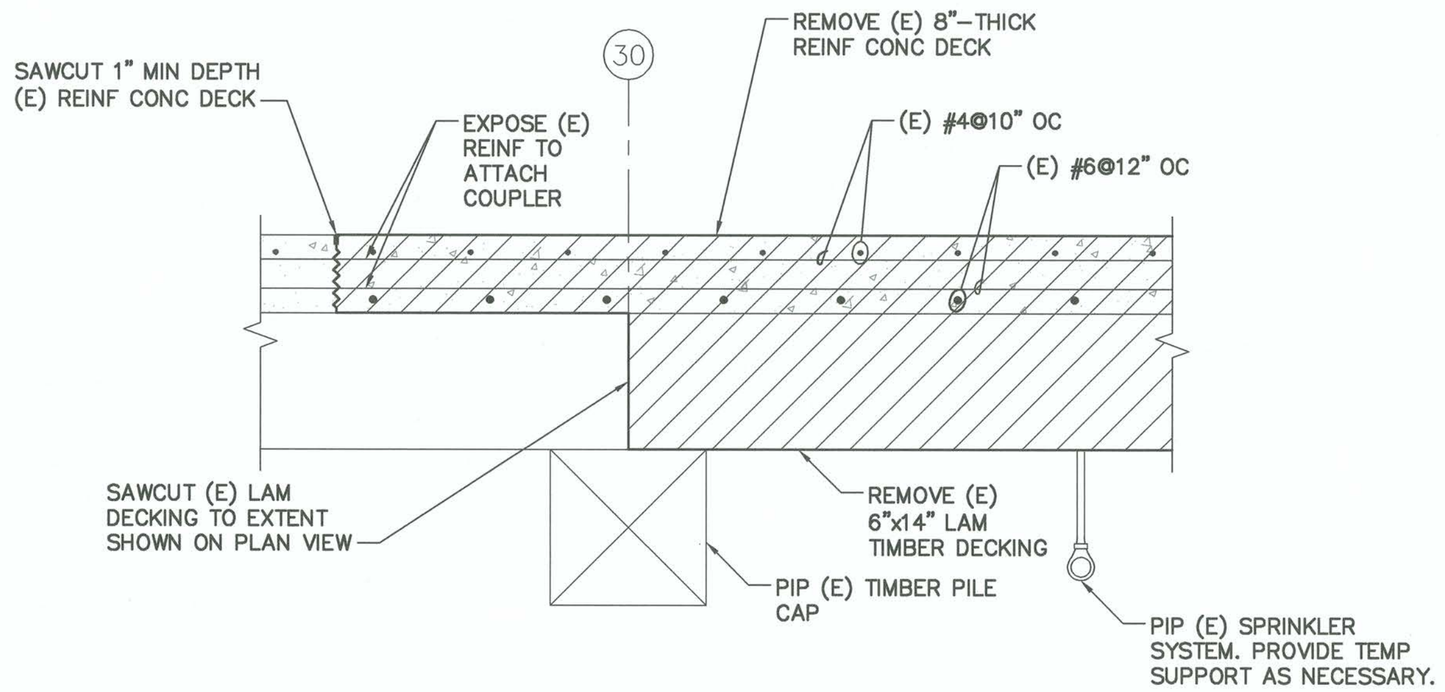

1 / – DECK REMOVAL
SCALE: 1" = 1'-0"

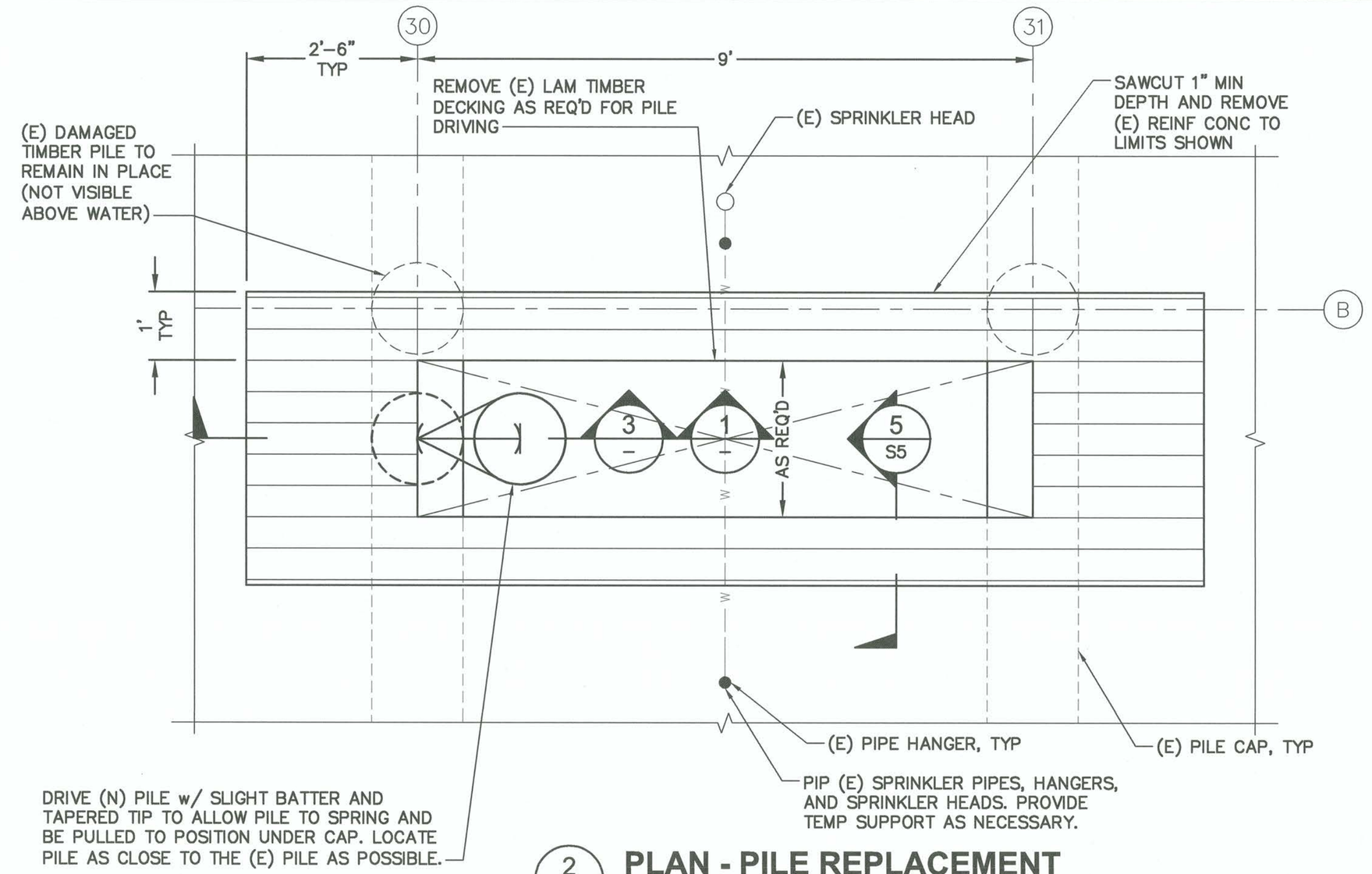

2 / S1 PLAN - PILE REPLACEMENT
SCALE: 3/4" = 1'-0"

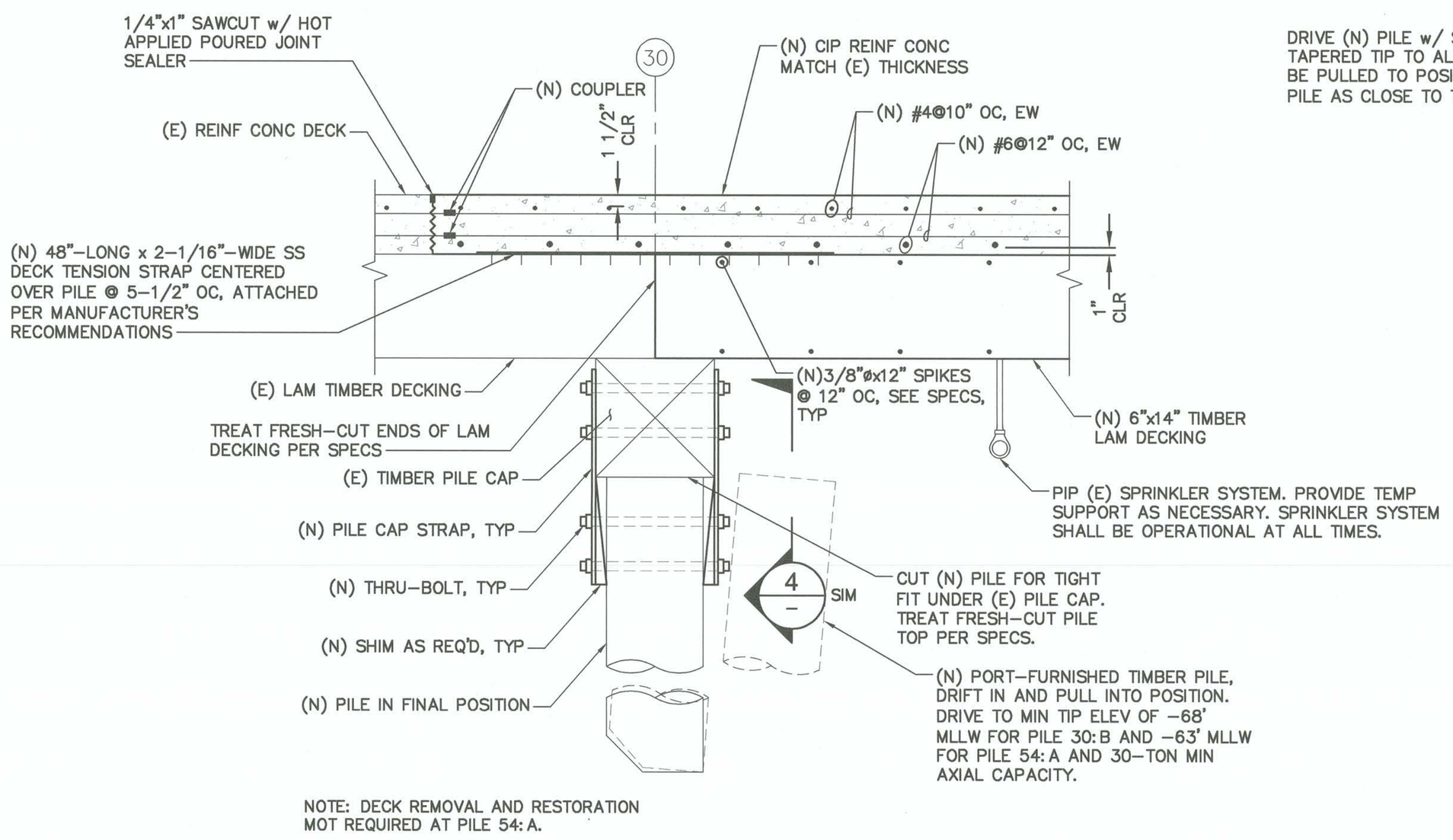

NOTE: DECK REMOVAL AND RESTORATION MOT REQUIRED AT PILE 54:A.

3 / S1 (S2) SECTION - PILE REPLACEMENT
SCALE: 1" = 1'-0"

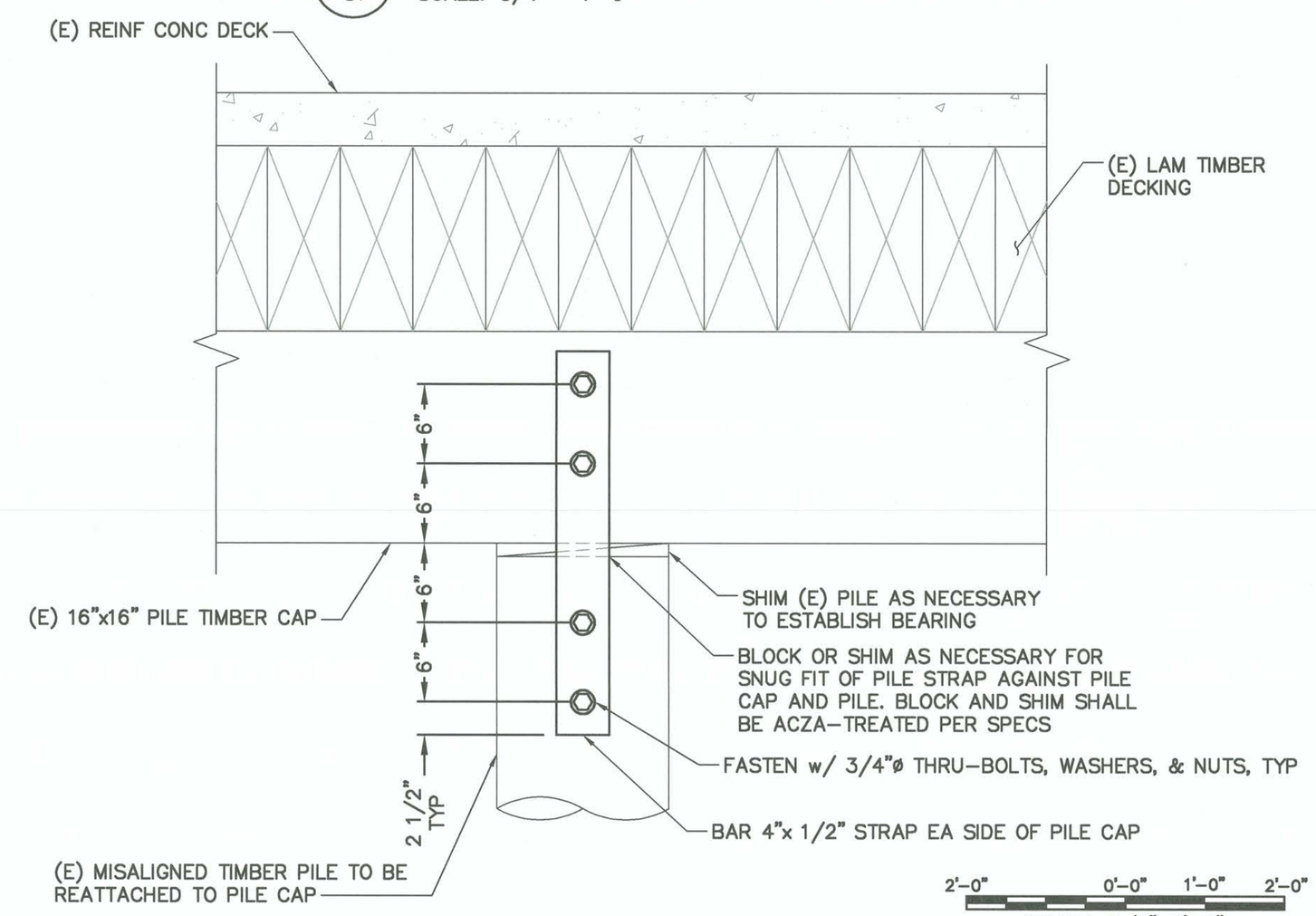

4 / S1 (S2, S3) DETAIL
SCALE: 1 1/2" = 1'-0"

2'-0" 0'-0" 1'-0" 2'-0"
SCALE: 3/4"=1'-0"

1'-0" 0'-0" 1'-0" 2'-0"
SCALE: 1"=1'-0"

1'-0" 0'-0" 6" 1'-0"
SCALE: 1 1/2"=1'-0"

Port of Tacoma
P.O. BOX 1837 TACOMA, WA 98401 (253)383-5841

moffatt & nichol

MARK:	REVISION:	BY:	APPR:	DATE:

BRIAN T. OSTBO, STATE OF WASHINGTON REGISTERED STRUCTURAL ENGINEER PROFESSIONAL, 23394

07/21/2017

APPROVED:	B.OSTBO	7/21/17
	CHECKED BY	DATE
	B.HALEY	7/21/17
DIRECTOR ENGR	PROJ. ENGR	DATE

PRINTED BY: aszarvadi Jul 20, 2017
PORT ADDRESS: ONE SITCUM PLAZA TACOMA, WA 98401-1837

PORT OF TACOMA
WEST HYLEBOS LOG DOCK REPAIRS
REPAIR DETAILS
SHEET 1

TOWNSHIP: 21N	RANGE: 03E	SECTION: 36	
DAT-HRZ: WA83-SF	VERT: MLLW 19.39' @ Tide 22.1933		
PARCEL:	DRAWING SCALE: AS NOTED		

6570
S4
7 OF 10

CONT/CONS: 070636	
M. ID: 201016.01	
PHASE: BID SET	

THIS DRAWING IS THE PROPERTY OF THE PORT OF TACOMA AND SHALL NOT BE USED ON OTHER WORK, DISCLOSED, COPIED, IN WHOLE OR IN PART, WITHOUT WRITTEN PERMISSION

BINDING EDGE

File: P:\9648-03\CADD_Active_SheetSet\201016.01_S4, Plotted: 7/20/2017 5:59 PM by SZARVADI, ANDRA

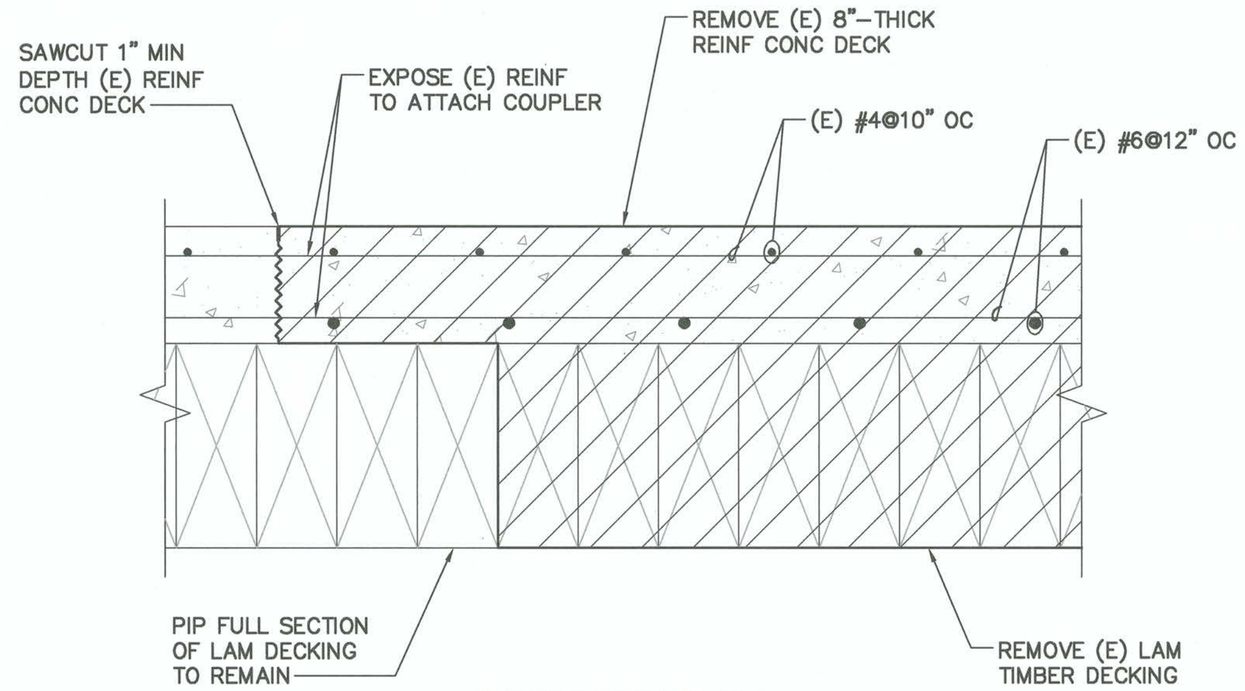

DECK REMOVAL

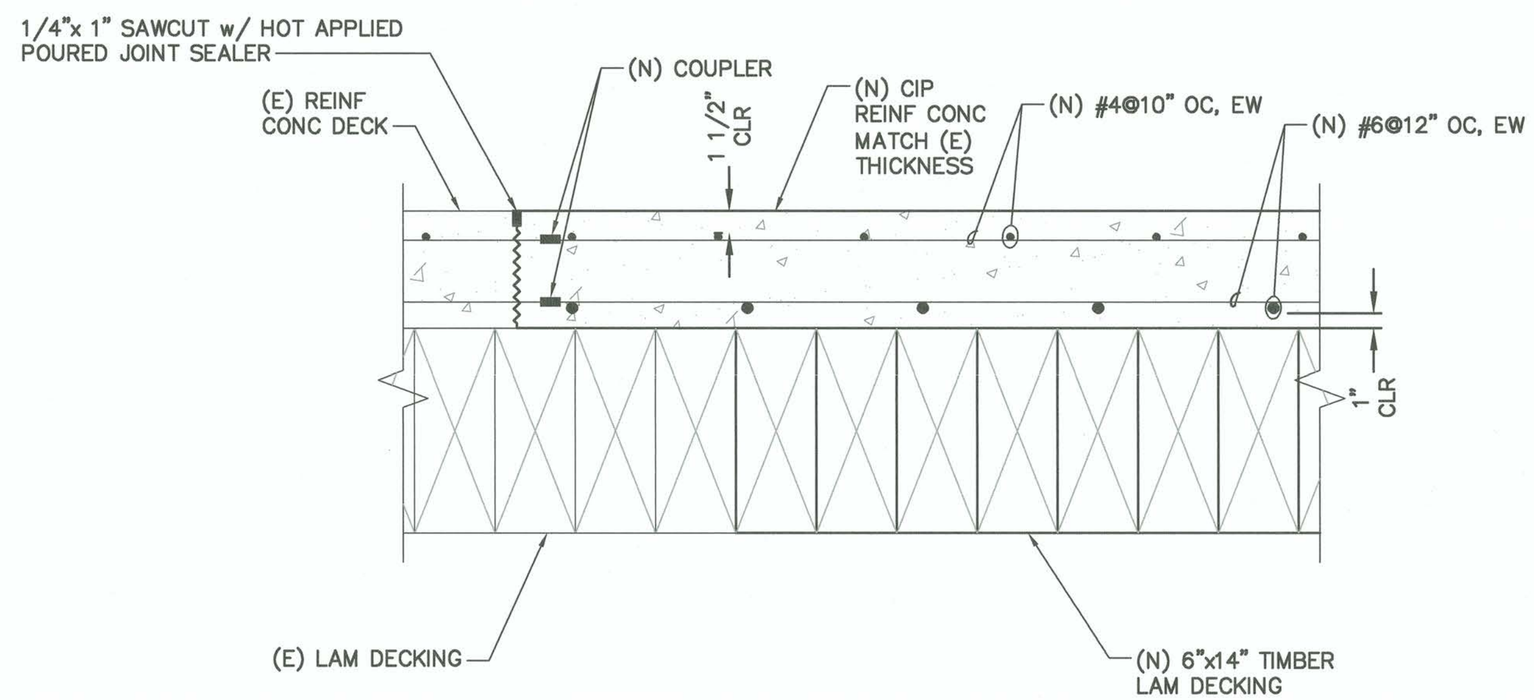

DECK RESTORATION

5 / S4 **SECTION**
SCALE: 1 1/2" = 1'-0"

1'-0" 0'-0" 6" 1'-0"
SCALE: 1 1/2"=1'-0"

BINDING EDGE

File: P:\9648-03\CADD_Active_SheetSet\201016.01_S5; Plotted: 7/20/2017 5:59 PM by SZARVADI, ANDRA

moffatt & nichol

Port of Tacoma
P.O. BOX 1837 TACOMA, WA 98401 (253)383-5841

MARK:	REVISION:	BY:	APPR:	DATE:

B.OSTBO 7/21/17
CHECKED BY DATE
B.HALEY 7/21/17
PROJ. ENGR DATE
PRINTED BY: aszarvadi Jul 20, 2017
PORT ADDRESS:ONE SITCUM PLAZA
TACOMA, WA 98401-1837

APPROVED:
DIRECTOR ENG DATE

PORT OF TACOMA
WEST HYLEBOS LOG DOCK REPAIRS
REPAIR DETAILS
SHEET 2

TOWNSHIP: 21N	RANGE: 03E	SECTION: 36	
DAT-HRZ: WA83-SF	VERT: MLLW 19.39' @ Tide 22 1933		
PARCEL:	DRAWING SCALE: AS NOTED		

6570
S5
8 OF 10

CONT/CONS: 070636	
M. ID: 201016.01	
PHASE: BID SET	

THIS DRAWING IS THE PROPERTY OF THE PORT OF TACOMA AND SHALL NOT BE USED ON OTHER WORK, DISCLOSED, COPIED, IN WHOLE OR IN PART, WITHOUT WRITTEN PERMISSION

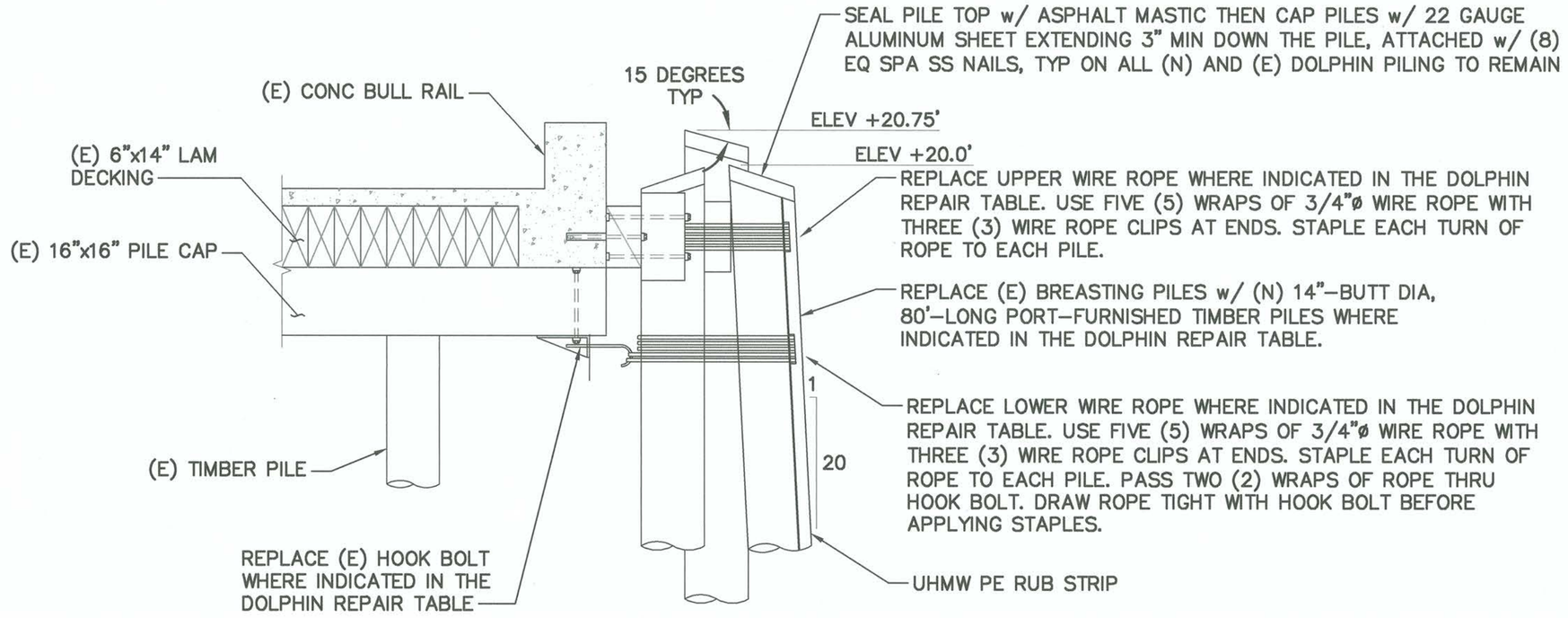

8 DETAIL - DOLPHIN
SCALE: 1/2" = 1'–0"

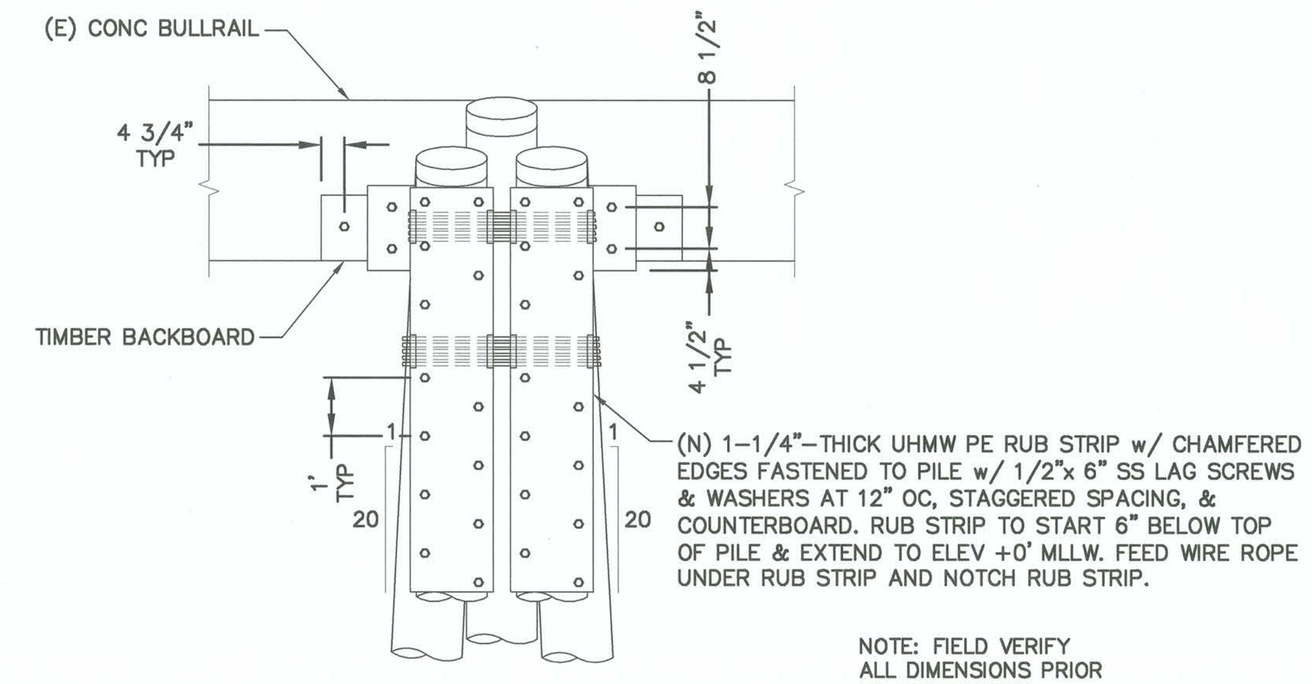

NOTE: FIELD VERIFY ALL DIMENSIONS PRIOR TO FABRICATION.

7 ELEVATION - DOLPHIN
SCALE: 1/2" = 1'–0"

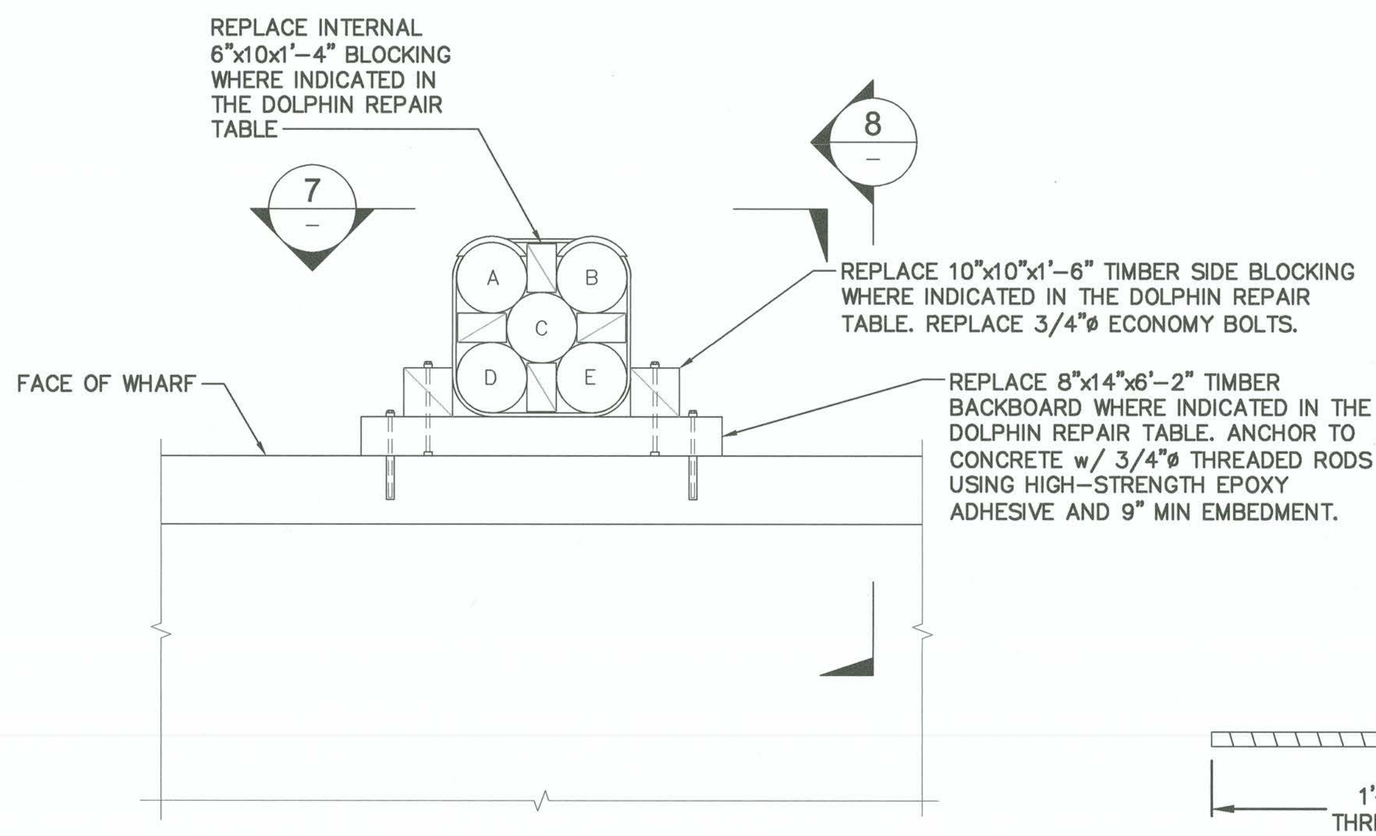

6 PLAN - DOLPHIN
SCALE: 1/2" = 1'–0"

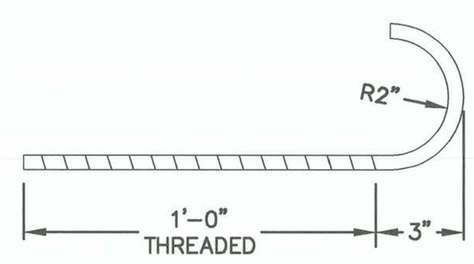

9 DETAIL - HOOK
SCALE: 3" = 1'–0"

DOLPHIN REPAIR TABLE

DOLPHIN (BENT)	REPLACE DOLPHIN PILE	PULL UP (5' MAX) AND FRESH–HEAD DOLPHIN PILE	REPLACE WIRE ROPE WRAPS	PROVIDE UHMW PE RUB STRIP	REPLACE 8"x14" BACKBOARD	NEW EPOXY ANCHORS	REPLACE 10"x10" SIDE BLOCKS	REPLACE INTERNAL 6"x10" DOLPHIN BLOCKING	REPLACE HOOK
9	A, B, C	–	U&L	2	–		2	4	–
15	A, B	C, D, E	U&L	2	–		2	4	1
21	A, B	C, D, E	U&L	2	–		2	4	–
27	A, B	C, D, E	U&L	2	–		2	4	*
33	A, B	C, D, E	U&L	2	–		2	4	–
39	A, B	C, D, E	U&L	2	1	X	2	4	1
45	A, B, D	C, E	U&L	2	1	X	2	4	1
51	A, B	D, E	U&L	2	–		2	4	–
57	B, D	A, C	U&L	2	–		2	4	–
63	A, B	C	U&L	2	1		2	4	–
69	–	–	L	(E)	1	X	2	4	1
74	A, B, D	C, E	U&L	2	–		2	4	–
80	A, B, D	C, E	U&L	2	1**	X	2	4	1
86	–	–	–	(E)	–		–	–	–
92	–	–	L	(E)	–		–	–	1
98	–	–	L	(E)	–		–	–	1
104	–	–	L	(E)	–		–	–	1
TOTAL	28	26	28	26	5		26	52	8

*TIGHTEN WEST HOOK–PLATE ANCHOR NUT.
**MOVE BACKBOARD TO BE CENTERED ON DOLPHINS.

2'–0" 0'–0" 2'–0" 4'–0"
SCALE: 1/2"=1'–0"

6" 0'–0" 3" 6"
SCALE: 3"=1'–0"

Port of Tacoma
P.O. BOX 1837 TACOMA, WA 98401 (253)383-5841

moffatt & nichol

MARK:	REVISION:	BY:	APPR:	DATE:

07/21/2017

B.OSTBO 7/21/17
CHECKED BY DATE
B.HALEY 7/21/17
PROJ. ENGR DATE
APPROVED:
DIRECTOR ENG. DATE

PORT OF TACOMA
WEST HYLEBOS LOG DOCK REPAIRS
REPAIR DETAILS
SHEET 3

6570
S6
9 OF 10

CONT/CONS: 070636 | TOWNSHIP: 21N | RANGE: 03E | SECTION: 36 | PRINTED BY: aszarvadi Jul 20, 2017
M. ID: 201016.01 | DAT–HRZ: WA83–SF | VERT: MLLW 19.39' @ Tide 22.1933 | PORT ADDRESS: ONE SITCUM PLAZA, TACOMA, WA 98401–1837
PHASE: BID SET | PARCEL: | DRAWING SCALE: AS NOTED

THIS DRAWING IS THE PROPERTY OF THE PORT OF TACOMA AND SHALL NOT BE USED ON OTHER WORK, DISCLOSED, COPIED, IN WHOLE OR IN PART, WITHOUT WRITTEN PERMISSION

BINDING EDGE

File: P:\9648-03\CADD_Active_SheetSet\201016.01_S6; Plotted: 7/20/2017 5:59 PM by SZARVADI, ANDRA

P1 S1 **BENT 9 DOLPHINS**
LOOKING SOUTHWEST

P2 S1 **BENT 15 DOLPHIN HOOK**
LOOKING NORTHWEST

P3 S2 **BENT 39 DOLPHIN**
LOOKING NORTHWEST

P4 S2 **BENT 63 DOLPHIN**
LOOKING NORTHWEST

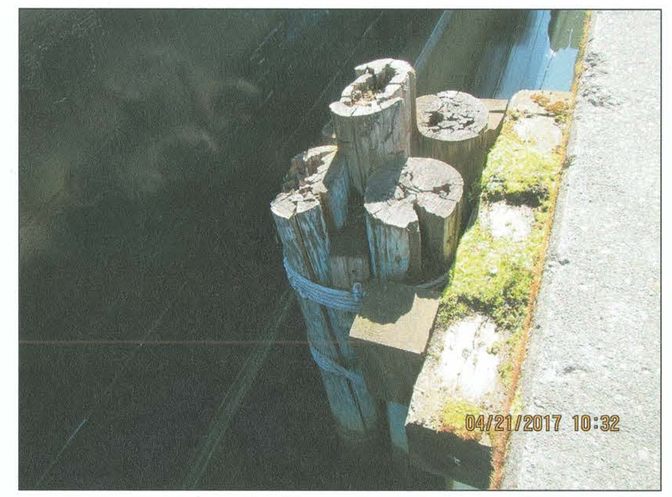

P5 S1 **BENT 15 DOLPHIN**
LOOKING SOUTHEAST

P6 S3 **BENT 98 DOLPHIN**
LOOKING SOUTHWEST

P7 S2 **BENT 74 DOLPHIN**
LOOKING SOUTH

P8 S1 **MISSING PILE B30:B**
LOOKING SOUTH

P9 S3 **MISALIGNED PILES B112:D & B112:E**
LOOKING WEST

moffatt & nichol

Port of Tacoma
P.O. BOX 1837 TACOMA, WA 98401 (253)383-5841

MARK:	REVISION:	BY:	APPR:	DATE:

STATE OF WASHINGTON BRADLEY C. OSTBO 22934 REGISTERED PROFESSIONAL ENGINEER 07/21/2017

APPROVED:
DIRECTOR ENG. DATE

B.OSTBO 7/21/17
CHECKED BY DATE
B.HALEY 7/21/17
PROJ. ENGR DATE
PRINTED BY: aszarvadi Jul 20, 2017
PORT ADDRESS:ONE SITCUM PLAZA
TACOMA, WA 98401-1837

PORT OF TACOMA
WEST HYLEBOS LOG DOCK REPAIRS
SITE PHOTOGRAPHS

TOWNSHIP: 21N | RANGE: 03E | SECTION: 36
DAT-HRZ: WA83-SF | VERT: MLLW 19.39' @ Tide 22 1933
PARCEL: | DRAWING SCALE: AS NOTED

6570
S7
10 OF 10

CONT/CONS: 070636
M. ID: 201016.01
PHASE: BID SET

THIS DRAWING IS THE PROPERTY OF THE PORT OF TACOMA AND SHALL NOT BE USED ON OTHER WORK, DISCLOSED, COPIED, IN WHOLE OR IN PART, WITHOUT WRITTEN PERMISSION

BINDING EDGE

File: P:\9649-03\CADD_Active_SheetSet\201016.01_S7; Plotted: 7/20/2017 5:58 PM by SZARVADI, ANDRA