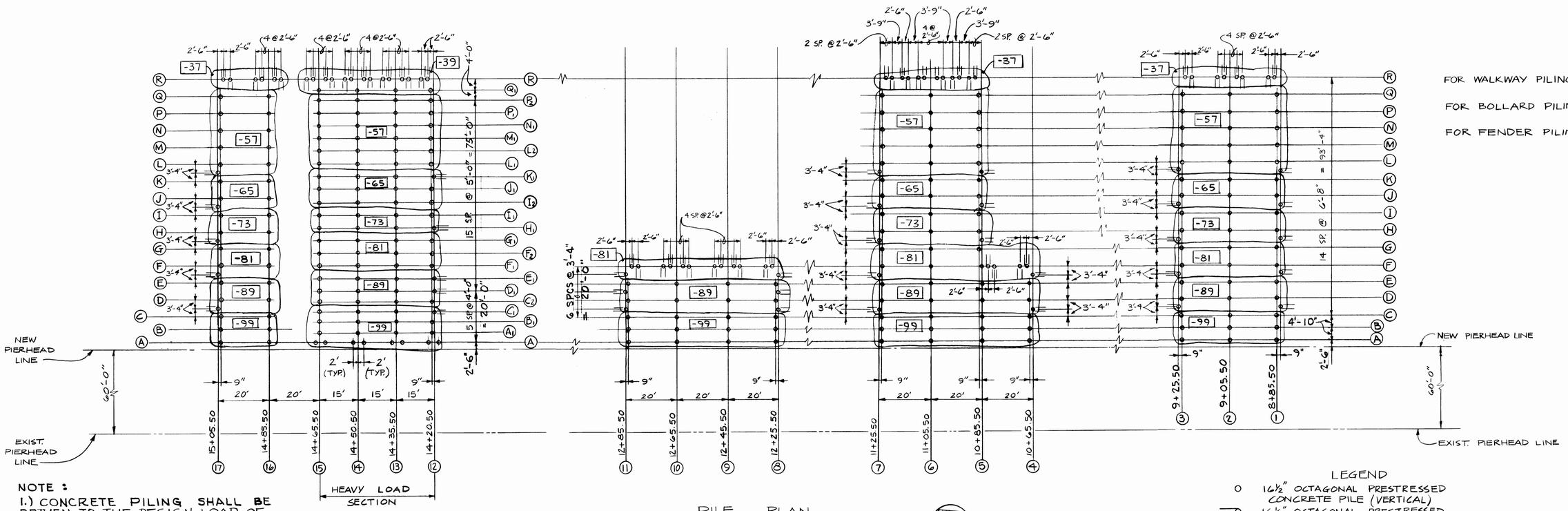

FOR WALKWAY PILING SEE SHEET S-13

FOR BOLLARD PILING SEE SHEET S-12

FOR FENDER PILING SEE SHEET S-10

NOTE :

1.) CONCRETE PILING SHALL BE DRIVEN TO THE DESIGN LOAD OF 100 TONS WITH A MINIMUM PENETRATION OF AT LEAST 25 FEET OR TO ELEVATION OF MINUS 35, WHICHEVER PROVIDES GREATER PENETRATION.

2) CONCRETE PILING WHICH ATTAIN REQUIRED BEARING CAPACITY WITH A TIP ELEVATION BETWEEN -40.00 AND -55.00 SHALL BE DRIVEN TO A MINIMUM TIP ELEVATION OF AT LEAST -55.00.

PILE PLAN

1" = 20'

LEGEND

- ○ 16½" OCTAGONAL PRESTRESSED CONCRETE PILE (VERTICAL)
- ⊃ 16½" OCTAGONAL PRESTRESSED CONCRETE PILE (BATTERED)
- [-73] ASSUMED PILE TIP ELEVATION (FOR BIDDING PURPOSES ONLY)

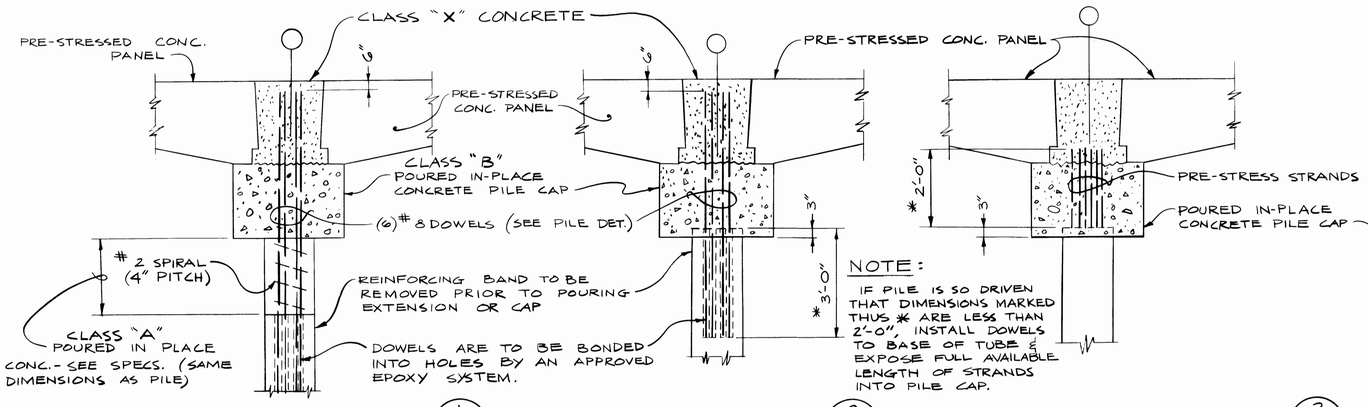

NOTE:

IF PILE IS SO DRIVEN THAT DIMENSIONS MARKED THUS * ARE LESS THAN 2'-0", INSTALL DOWELS TO BASE OF TUBE & EXPOSE FULL AVAILABLE LENGTH OF STRANDS INTO PILE CAP.

PILE TOP BELOW CUT OFF ELEV. (1 / S2 S5)
½" = 1'-0"

PILE TOP AT CUT OFF ELEV. (2 / S2 S5)
½" = 1'-0"

PILE TOP ABOVE CUT OFF ELEV. (3 / S2 S5)
½" = 1'-0"

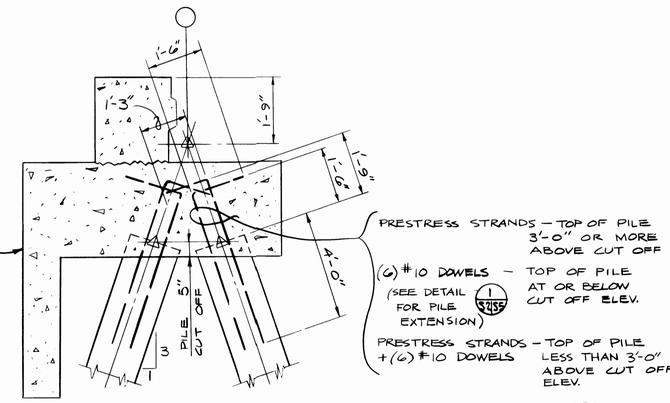

TYP. DETAIL OF BATTER PILE CONN. TO PILE CAP AT BULKHEAD LINE (4 / S2 S5)
½" = 1'-0"

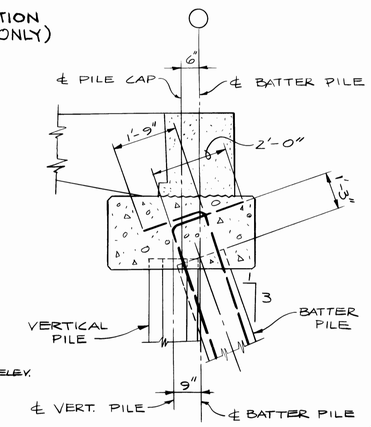

BATTER PILE CONN. TO PILE CAP AT LINES ① ③ ④ ⑤ ⑦ ⑧ ⑪ ⑫ ⑰ (5 / S2 S5)

TYPICAL DETAILS OF PILE TO PILE CAP CONNECTIONS

AS BUILT SEPT. 84

S2

HENRY L. COOK — STATE OF WASHINGTON — REGISTERED PROFESSIONAL ENGINEER

DRAWN DA., DT. DATE APRIL 1983	PORT OF TACOMA
CHECKED W.S. DATE APRIL 1983	PILING PLAN
CHECKED HLC DATE MAY, 1983	TOTE PIER FACILITY BLAIR WATERWAY 1983
CONT. NO.	
FIELD BOOK (S)	SCALE NOTED
APPROVED R.R. MacLeod CHIEF ENGINEER 5/20/83 DATE	DRAWING NO. EP 3823-12
	SHEET 11 OF 25

SITTS & HILL ENGINEERS
CIVIL, STRUCTURAL & SURVEYING
2901 SO. 40th TACOMA WA 98409

MARK	REVISION	BY	APP.	DATE

4684