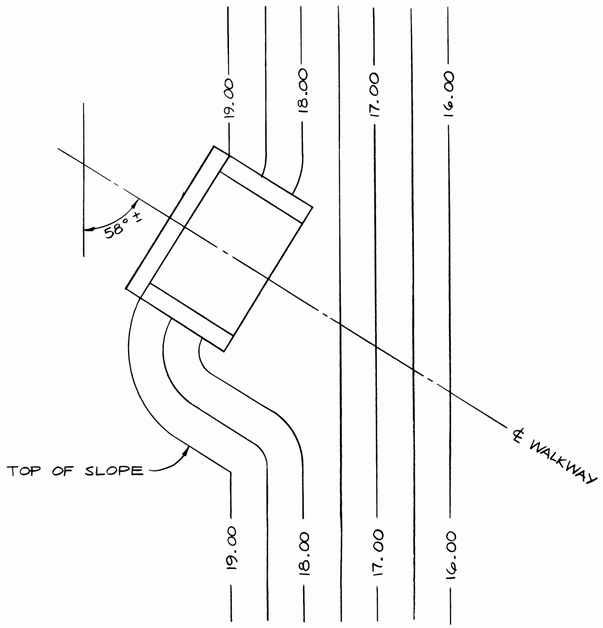

PLAN OF WALKWAY LANDING (5 S13 S14)

½" = 1'-0" (½ FOOT CONTOURS)

FOR DETAILS NOT SHOWN, SEE WALKWAY PLAN, SHEET S-13

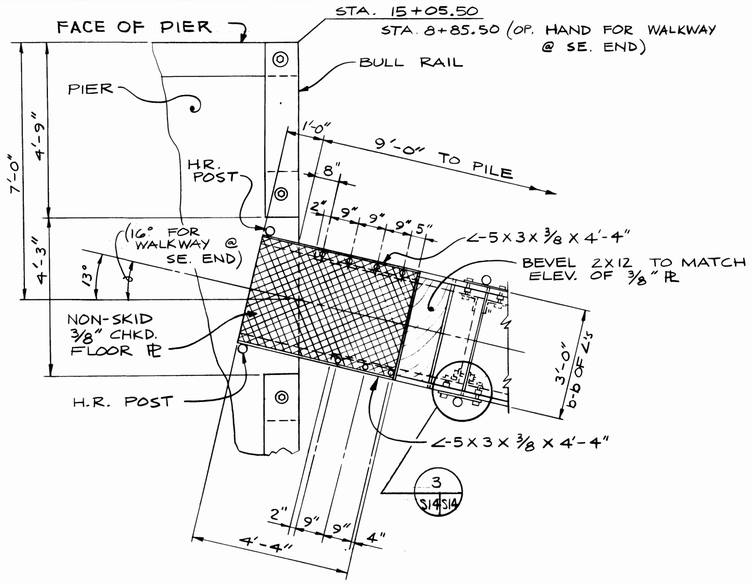

½" = 1'-0" (1 S13 S14)

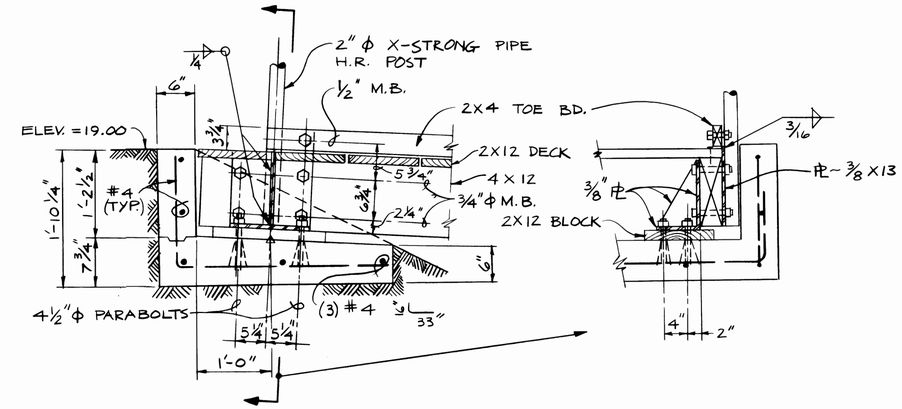

1" = 1'-0" (2 S13 S14)

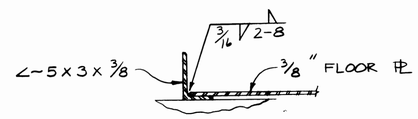

1½" = 1'-0" (4 S13 S14)

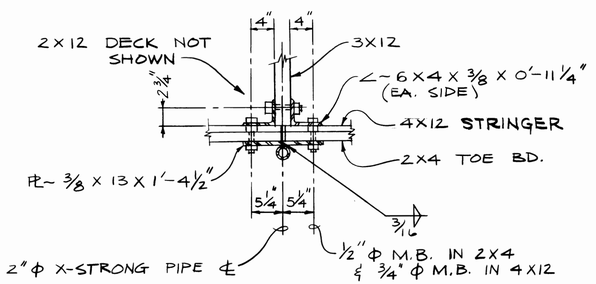

1" = 1'-0" (3 S13 S14 S14)

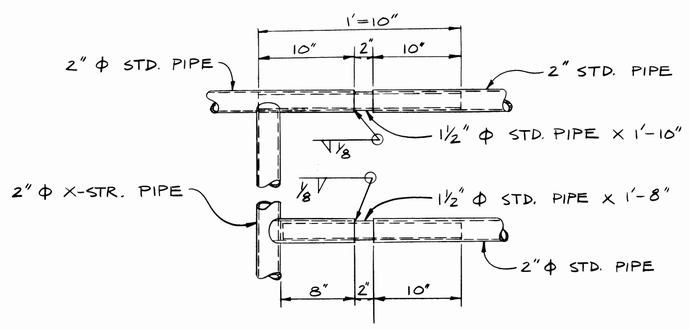

DETAIL "A"

(TYP. H.R. EXPANSION JT.)

1½" = 1'-0"

AS BUILT SEPT. 84 **S14**

HENRY L. COOK — STATE OF WASHINGTON — REGISTERED PROFESSIONAL ENGINEER

DRAWN DJA DATE APRIL, 1983	PORT OF TACOMA
CHECKED W.S. DATE APRIL, 1983	WALKWAY DETAILS
CHECKED HLC DATE MAY, 1983	TOTE PIER FACILITY BLAIR WATERWAY, 1983
CONT. NO.	
FIELD BOOK (S):	SCALE NOTED
APPROVED R.L. MacLeod CHIEF ENGINEER — DATE 5/20/83	DRAWING NO. EP 3823-12
	SHEET 23 OF 25

SITTS & HILL ENGINEERS
CIVIL, STRUCTURAL & SURVEYING
2901 SO. 40th TACOMA WA 98409

MARK	REVISION	BY	APP.	DATE