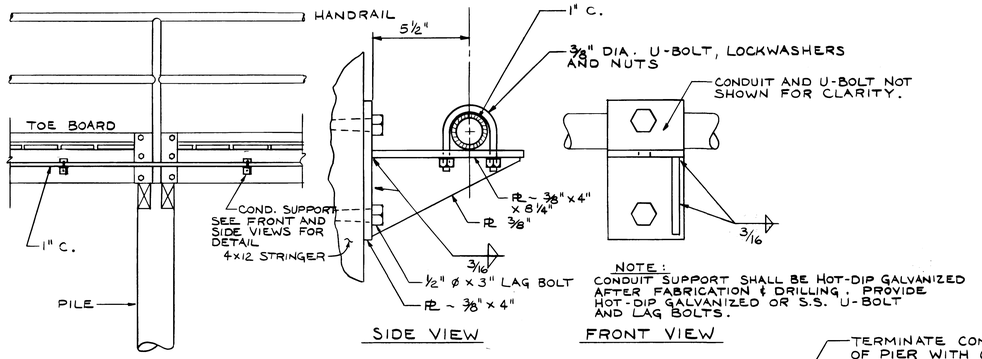

NOTE: CONDUIT SUPPORT SHALL BE HOT-DIP GALVANIZED AFTER FABRICATION & DRILLING. PROVIDE HOT-DIP GALVANIZED OR S.S. U-BOLT AND LAG BOLTS.

CONDUIT SUPPORT ON WALKWAY

NO SCALE

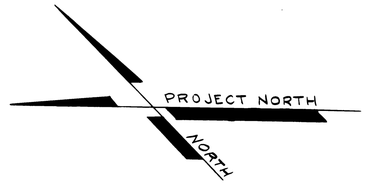

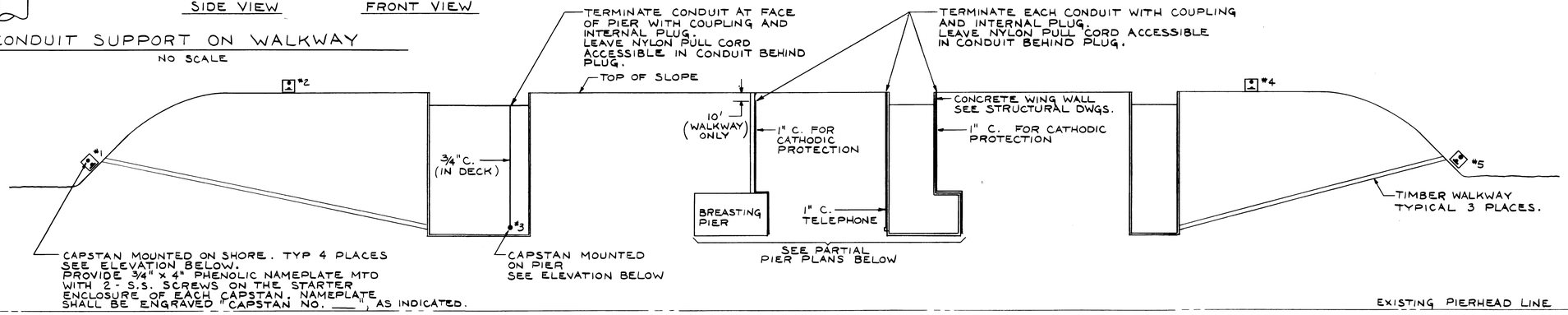

Capstans are foot switch operated as described in Specifications Section 14370. Contractor shall install and wire foot switches and make all connections. Provide raceway, wire, hardware, fasteners, and all items to completely install and connect all power and controls.

PIER ELECTRICAL LAYOUT

SCALE : 1" = 50'

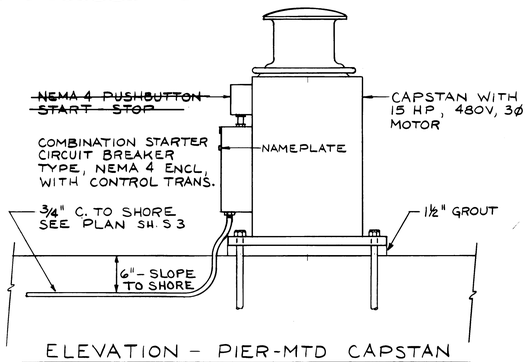

ELEVATION - PIER-MTD CAPSTAN

SCALE : 1" = 1'-0"

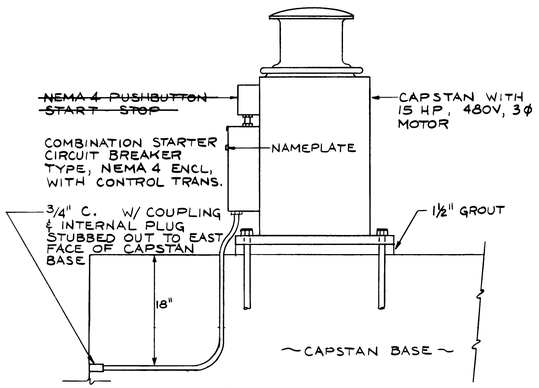

ELEVATION - SHORE-MTD CAPSTAN

SCALE : 1" = 1'-0"

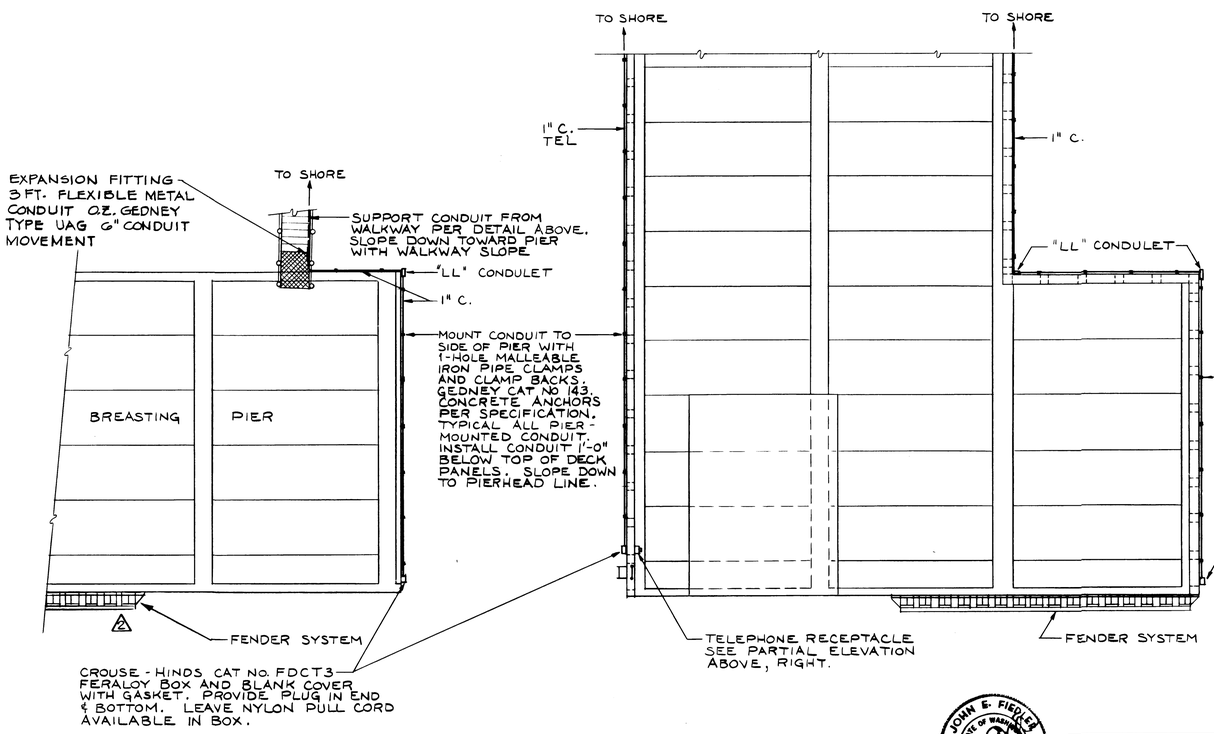

PARTIAL PIER PLANS

SCALE : ⅛" = 1'-0"

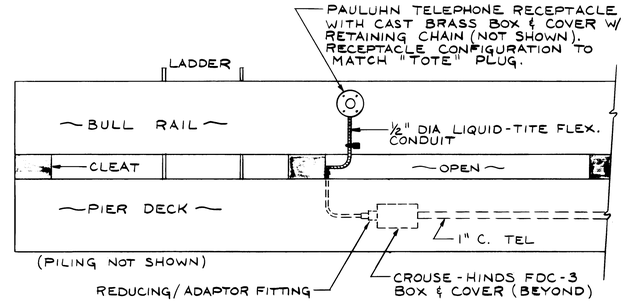

PARTIAL ELEVATION - TELEPHONE RECEP.

NO SCALE

NW UTILITY CONSULTANTS, INC.
CONSULTING ENGINEERS
1402 47TH AVENUE EAST
TACOMA, WASHINGTON 98424

JOHN E. FIELDER — STATE OF WASHINGTON — REGISTERED PROFESSIONAL ENGINEER

MARK	REVISION	BY	APP.	DATE
2	RELOCATE FDR. ON BREAST PIER	HLC		9/7/83
1	REF. ADDENDUM NO. 2 - DATED 6/24/83			6/28/83

E2

DRAWN PAF DATE APRIL, 83
CHECKED VEF DATE 5-20-83
CHECKED
DATE
CONT. NO.

PORT OF TACOMA

ELECTRICAL DETAILS TOTE PIER FACILITY BLAIR WATERWAY - 1983

FIELD BOOK (S)
SCALE NOTED
APPROVED 5/20/83 DATE
CHIEF ENGINEER
DRAWING NO. EP 3823-12
SHEET 25 OF 25