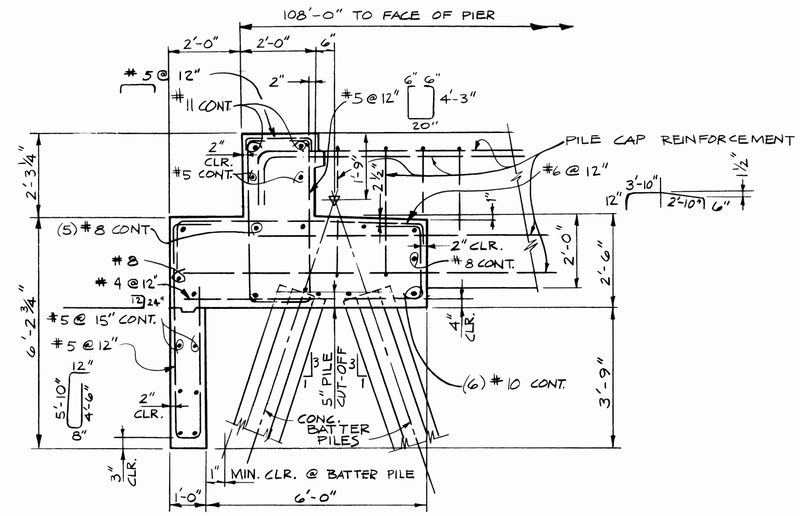

1 S3 S8 | 1 S4 S8

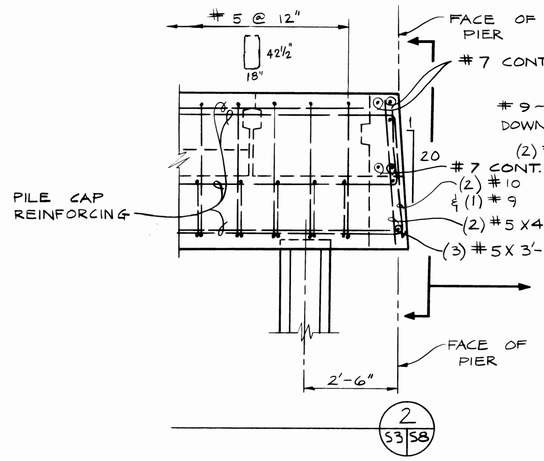

2 S3 S8

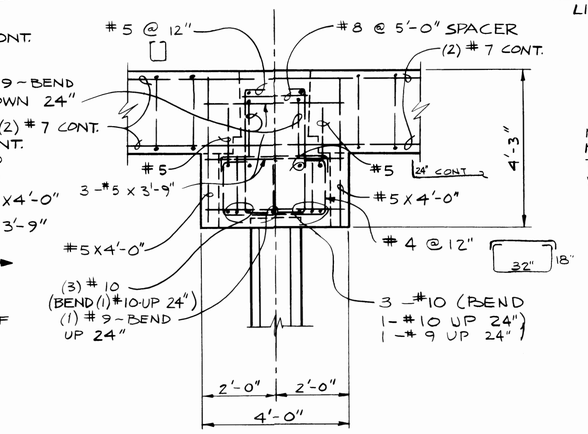

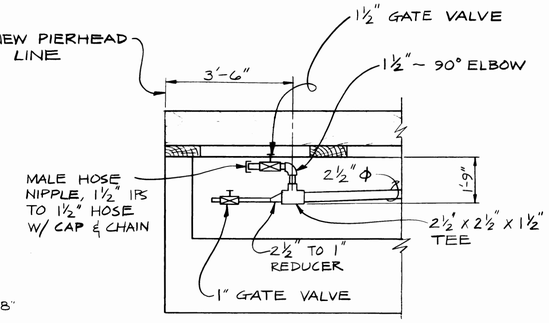

3 S4 S8

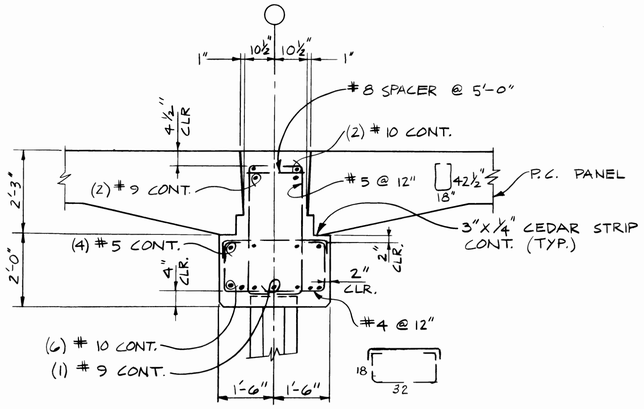

5 S3 S8 | 5 S4 S8

TYPICAL INTERIOR PILE CAP

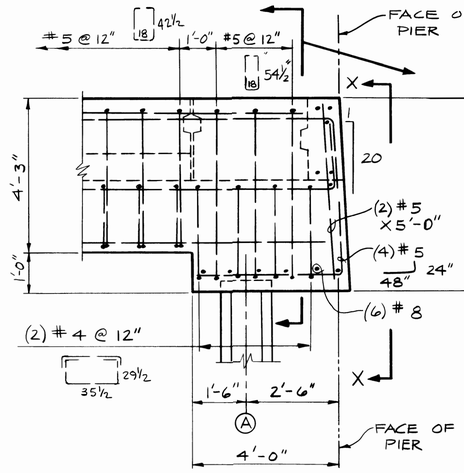

6 S3 S8 | 6 S4 S8

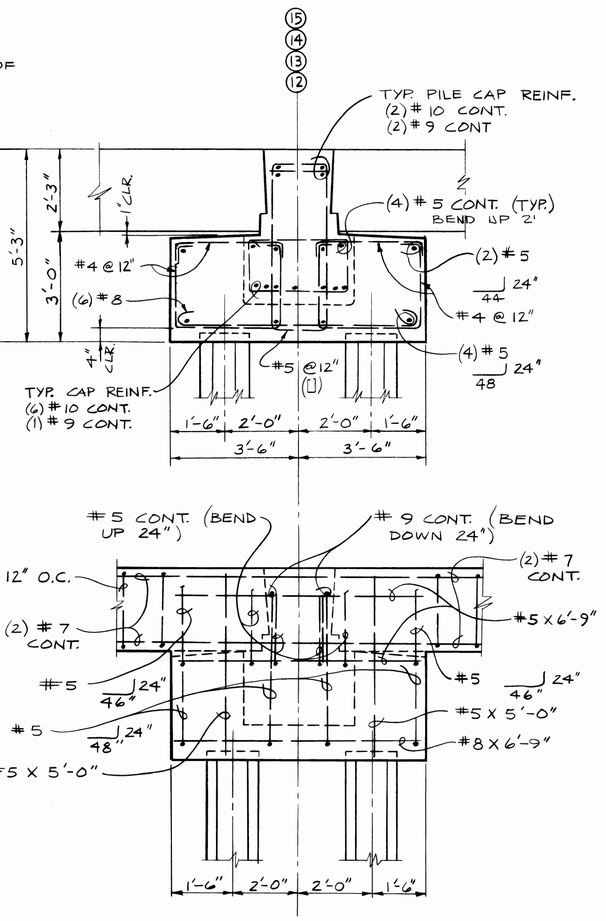

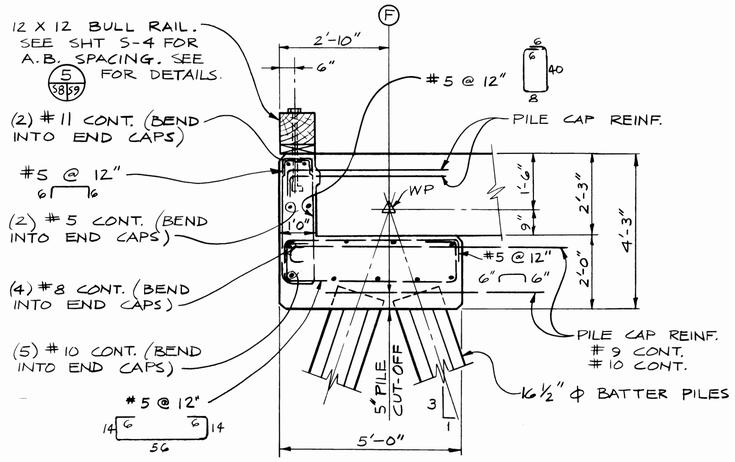

NOTE: BULL RAIL NOT REQUIRED ON BREASTING PIER.

4 S4 S8

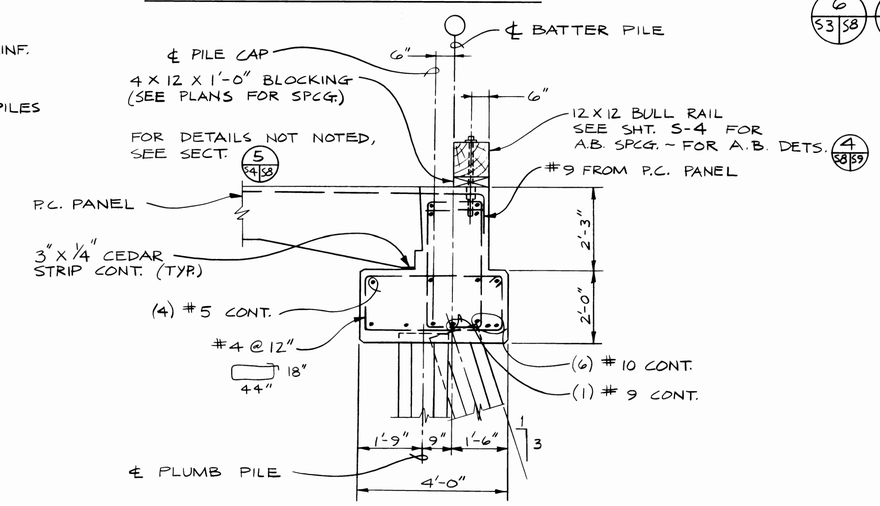

7 S3 S8 | 7 S4 S8

ELEVATION X-X

NOTE: FOR TERMINATION OF PILE IN PILE CAP SEE SHEET S-2.

S8

HENRY L. COOK — STATE OF WASHINGTON — REGISTERED PROFESSIONAL ENGINEER

AS BUILT SEPT. 84

SITTS & HILL ENGINEERS
CIVIL, STRUCTURAL & SURVEYING
2901 SO. 40th TACOMA WA 98409

MARK	REVISION	BY	APP.	DATE

DRAWN DJA DATE APRIL, 1983
CHECKED W.S. DATE APRIL, 1983
CHECKED HLC DATE MAY, 1983
CONT. NO.
FIELD BOOK (S)
APPROVED R. L. MacLeod CHIEF ENGINEER DATE 5/20/83

PORT OF TACOMA

TYPICAL PILE CAP DETAILS

TOTE PIER FACILITY
BLAIR WATERWAY, 1983

SCALE NOTED
DRAWING NO. EP 3823-12
SHEET 17 OF 25