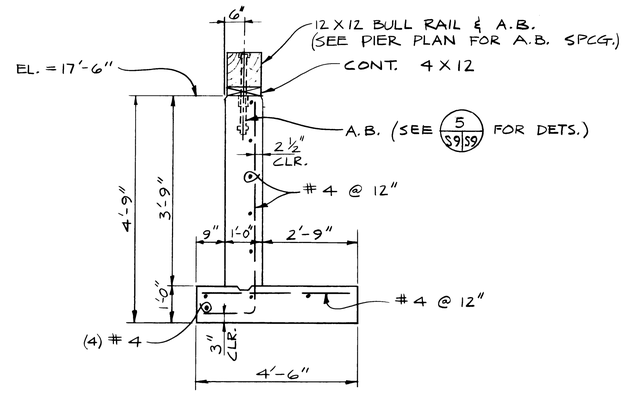

1
N.T.S. S3 & S4/S9

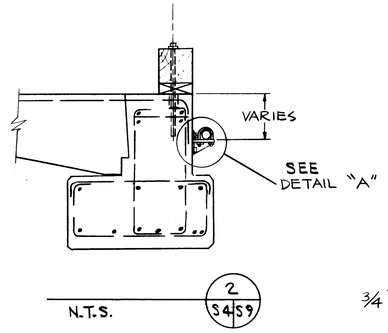

2
N.T.S. S4/S9

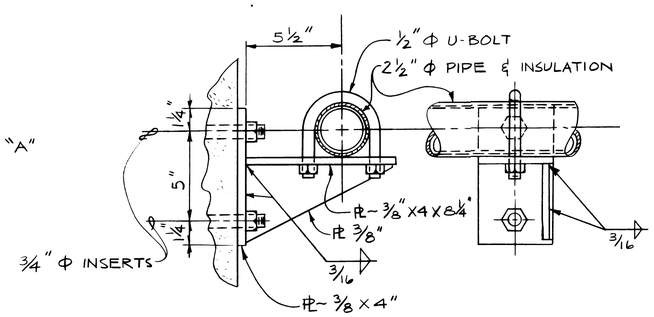

DETAIL "A"
3" = 1'-0"

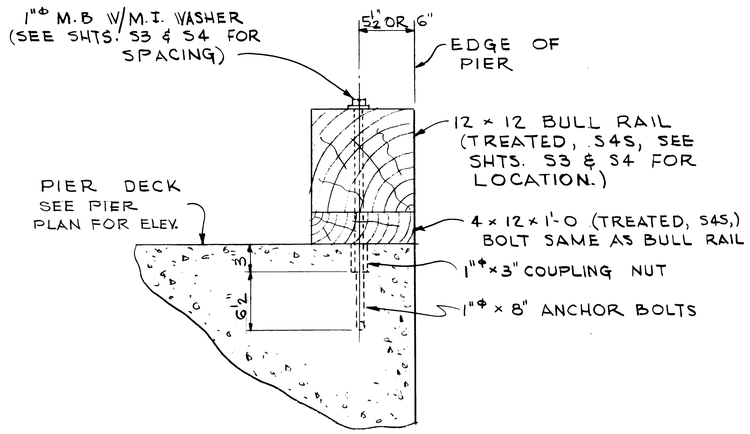

4
S7, S8 &, S9/S9

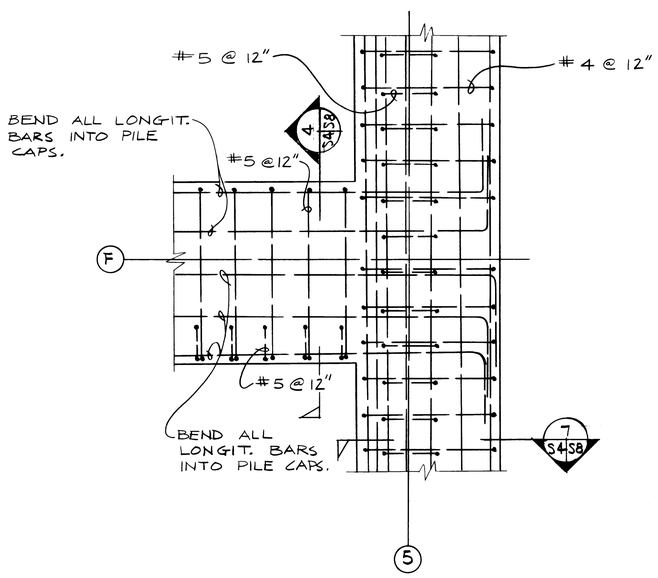

3
S9/S9

PLAN – INTERSECTION OF PILE CAPS

AS BUILT SEPT. 84

S9

HENRY L. COOK
STATE OF WASHINGTON
REGISTERED
PROFESSIONAL ENGINEER

DRAWN DJA DATE APRIL, 1983	PORT OF TACOMA
CHECKED W.S. DATE APRIL, 1983	MISCELLANEOUS DETAILS
CHECKED HLC DATE MAY, 1983	TOTE PIER FACILITY BLAIR WATERWAY, 1983
CONT. NO.	
FIELD BOOK(S):	SCALE NOTED
APPROVED R L MacLeod CHIEF ENGINEER DATE 5/20/83	DRAWING NO. EP 3823-12
	SHEET 18 OF 25

SITTS & HILL ENGINEERS
CIVIL, STRUCTURAL & SURVEYING
2901 SO. 40th TACOMA WA 98409

MARK	REVISION	BY	APP.	DATE

478-1