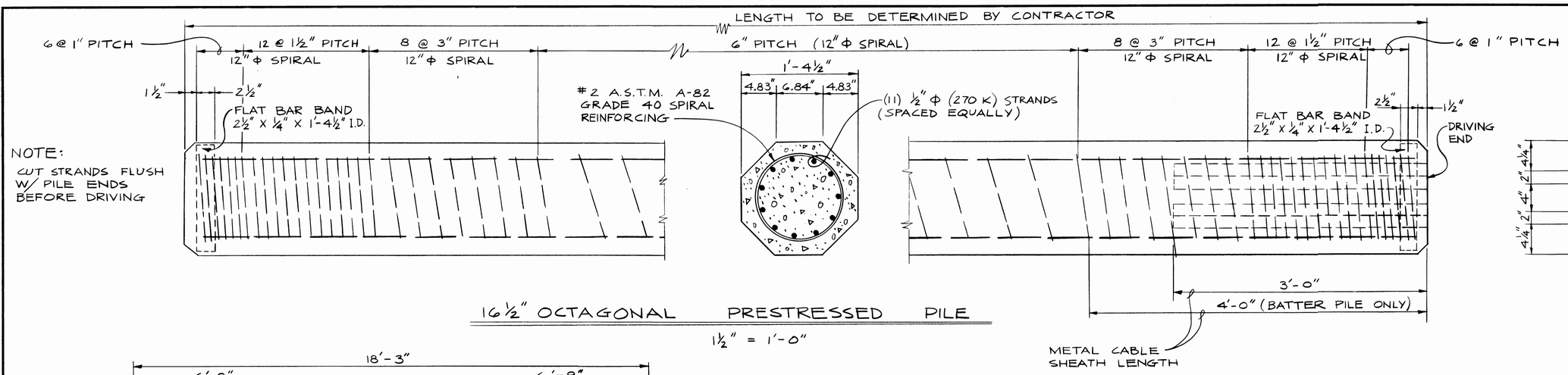

NOTE:
CUT STRANDS FLUSH W/ PILE ENDS BEFORE DRIVING

16½" OCTAGONAL PRESTRESSED PILE

1½" = 1'-0"

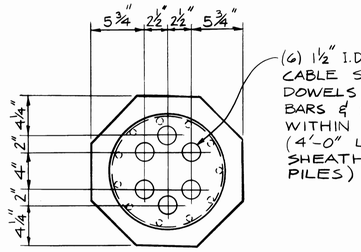

(6) 1½" I.D. X 3'-0" METAL CABLE SHEATHS FOR DOWELS. DOWELS SHALL BE #8 BARS & SHALL EXTEND TO WITHIN 6" OF TOP SLAB. (4'-0" LONG METAL CABLE SHEATHING AT BATTER PILES)

PILE DATA	
SIZE & SHAPE	16½" OCT.
SECTIONAL AREA	225 IN.²
WEIGHT	247 #/FT.
SECTION MODULUS	495 IN.³
CONCRETE COMP. STRENGTH	
@ RELEASE	5000 PSI.
@ DRIVING	7000 PSI
@ 28 DAYS	7000 PSI
PRESTRESS STEEL ULTIMATE STRENGTH STRAND	270 KSI ½" ϕ ~ 7 WIRE STRD.
PRETENSION	
NO. OF STRANDS	11
INITIAL FORCE	320 KIPS
DESIGN FORCE	260 KIPS
PRESTRESS IN CONC.	1155 PSI
SPIRAL	#2 ~ A82 SPCG./DWG.
PILE CAPACITY (DESIGN LOAD)	100 TONS

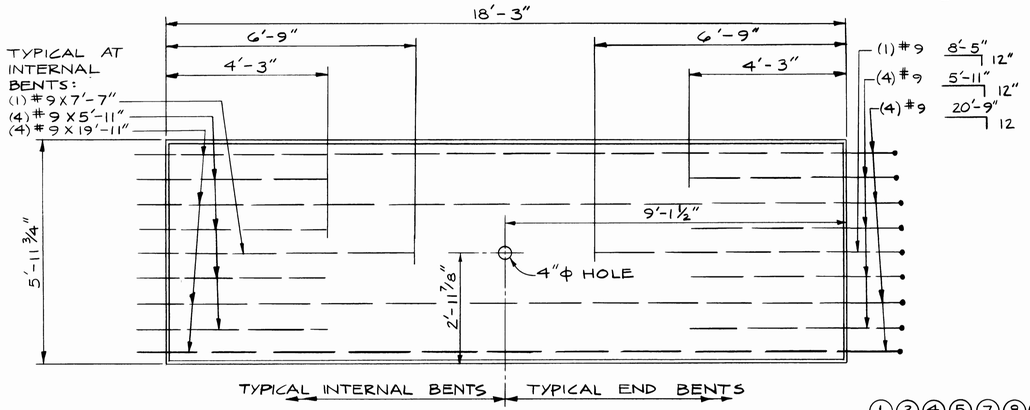

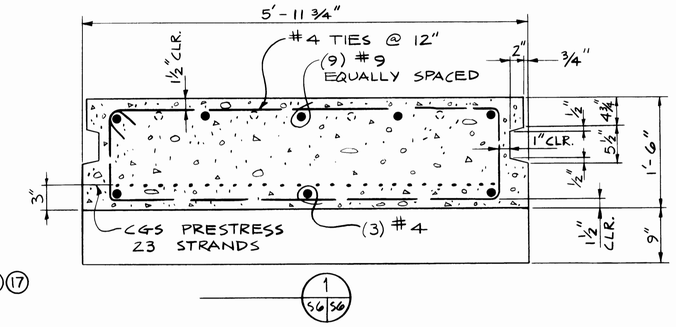

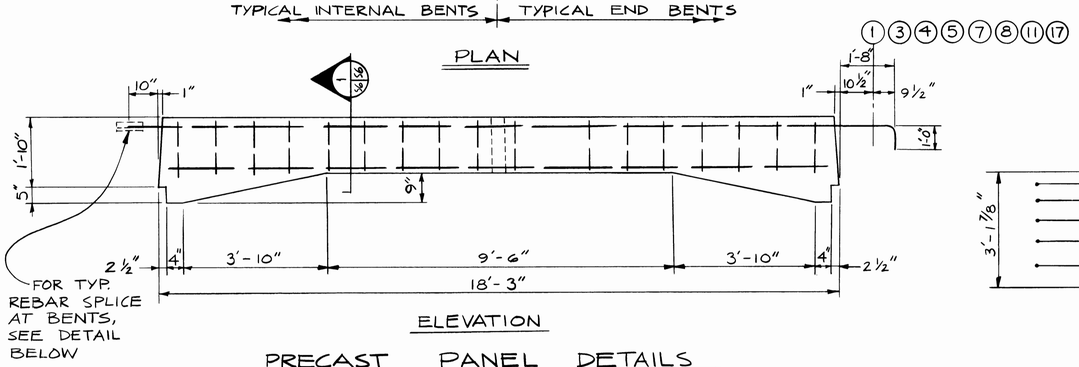

PRECAST PANEL DETAILS

(STANDARD SECTION TYPE "A")

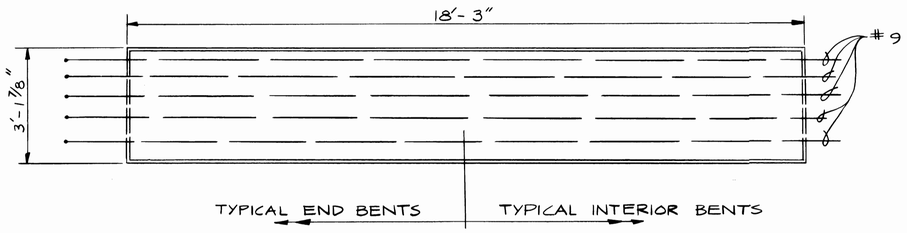

PLAN

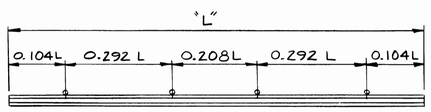

FOUR POINT PICK-UP FOR PILE

PANEL DATA		
SLAB THICKNESS @ MIDSPAN	1'-6"	2'-3"
DESIGN PANEL WIDTH	6' NOM.	3'-1⅞"
CONC. COMPRESSIVE STRENGTH	6000 P.S.I.	6000 P.S.I.
INITIAL PRESTRESS FORCE	665 KIPS	330 KIPS
DESIGN PRESTRESS FORCE	542 KIPS	399 KIPS
WEIGHT PER PANEL	29.52 KIPS	20.74 KIPS
REINFORCING STEEL	A 615 GRADE 60	A 615 GRADE 60

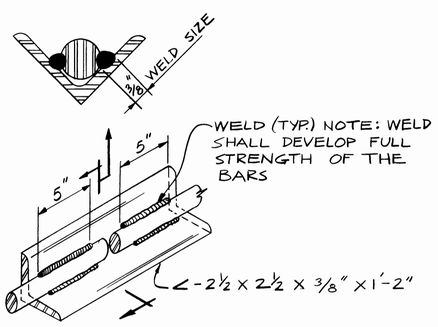

TYPICAL FIELD REBAR SPLICE
(TOP BARS IN PANEL AT PILE CAP)

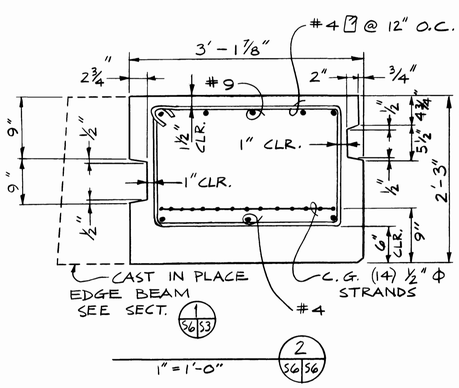

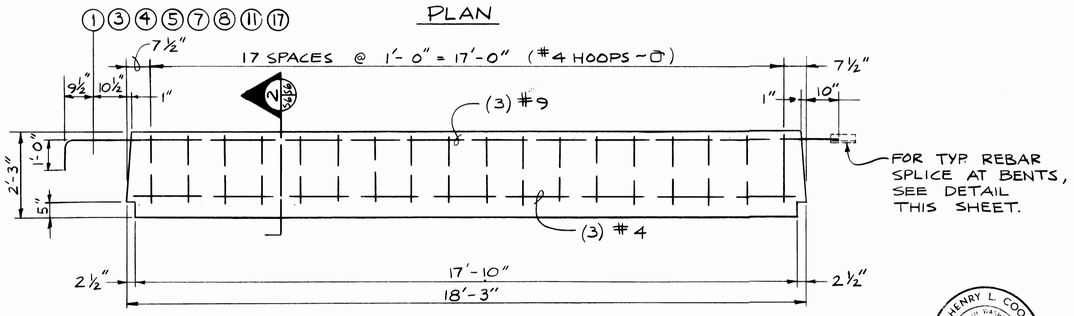

ELEVATION
½" = 1'-0"

PRECAST PANEL DETAIL

(STANDARD SECTION TYPE "A1")

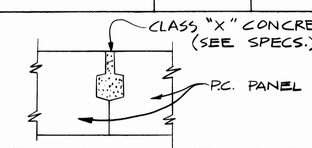

TYP PANEL LONGIT. JOINT CLOSURE

AS BUILT SEPT. 84 S6

HENRY L. COOK
STATE OF WASHINGTON
REGISTERED PROFESSIONAL ENGINEER

SITTS & HILL ENGINEERS
CIVIL, STRUCTURAL & SURVEYING
2901 SO. 40th TACOMA WA 98409

MARK	REVISION	BY	APP.	DATE

DRAWN DA. DATE APRIL, 1983
CHECKED W.S. DATE APRIL, 1983
CHECKED HLC DATE MAY, 1983
CONT. NO.
FIELD BOOK (S)
APPROVED R.L. Proctor 6/20/83 DATE
CHIEF ENGINEER

PORT OF TACOMA

PRESTRESSED CONCRETE PILE & A & A1 PANEL DETAILS

TOTE PIER FACILITY
BLAIR WATERWAY, 1983

SCALE NOTED
DRAWING NO. EP 3823-12
SHEET 15 OF 25