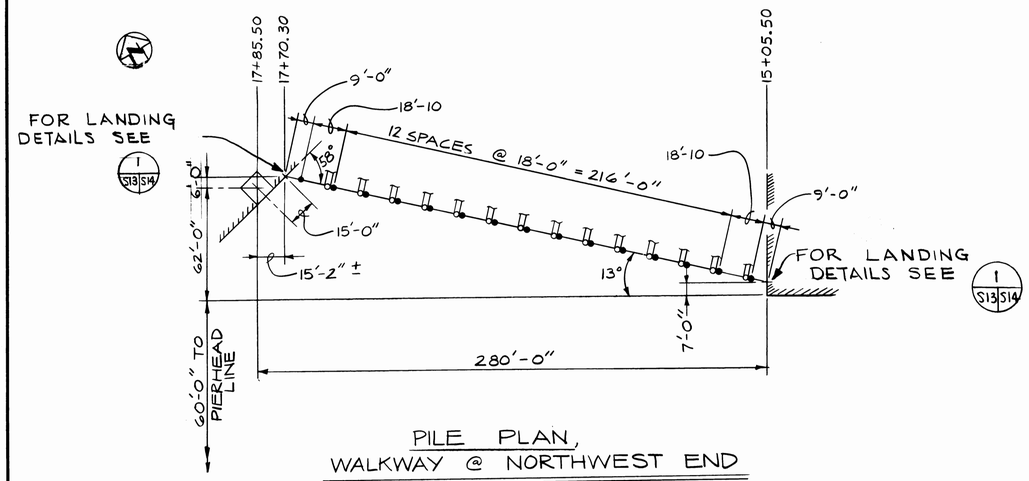

PILE PLAN,
WALKWAY @ NORTHWEST END

SCALE: 1" = 40'

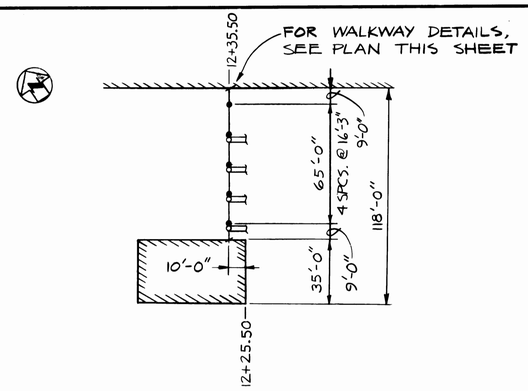

PILE PLAN
SHORE TO BREASTING PIER

1" = 40'

NOTE: TIMBER PILES FOR WALKWAYS SHALL BE DRIVEN TO A BEARING CAPACITY OF 12 TONS WITH A MINIMUM TIP PENETRATION OF 15 FEET.

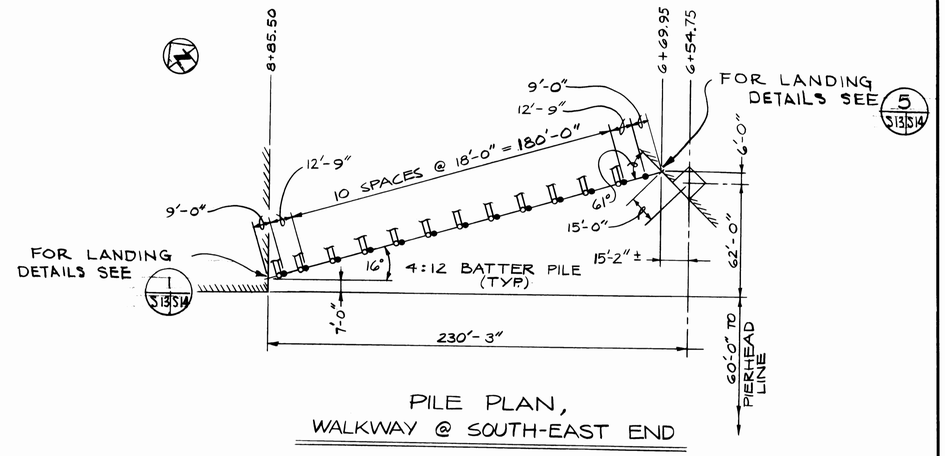

PILE PLAN,
WALKWAY @ SOUTH-EAST END

1" = 40'

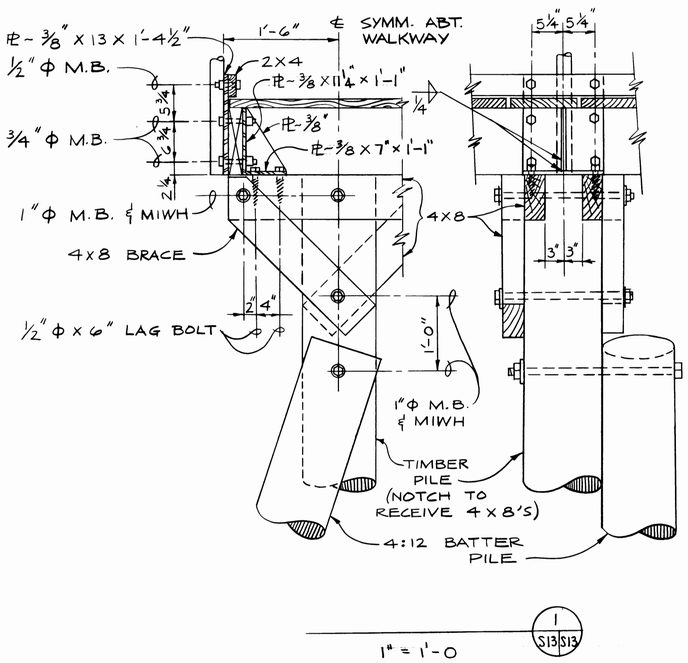

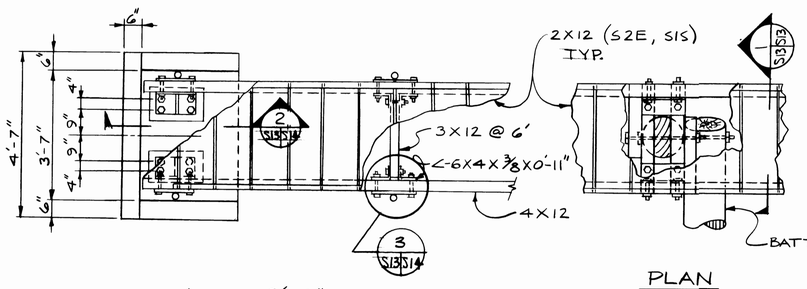

PLAN

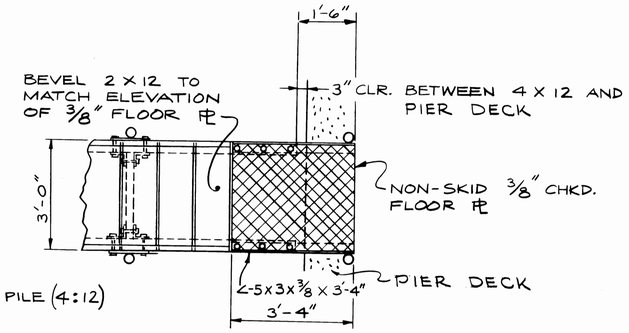

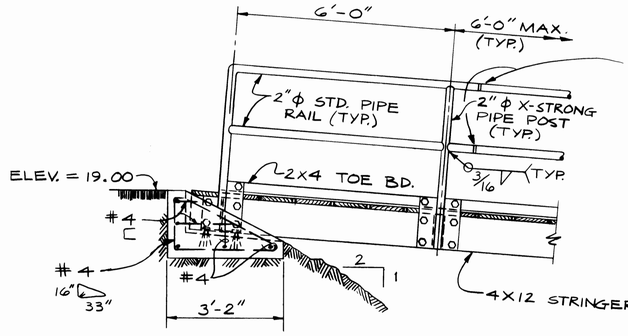

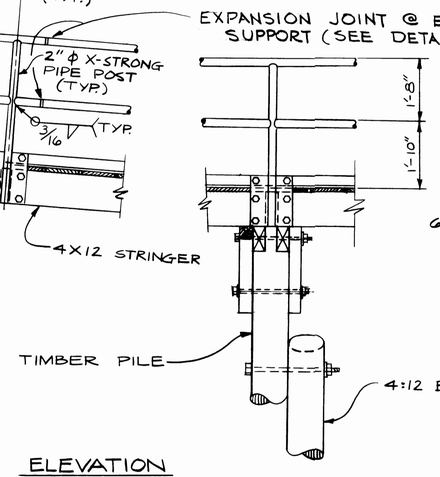

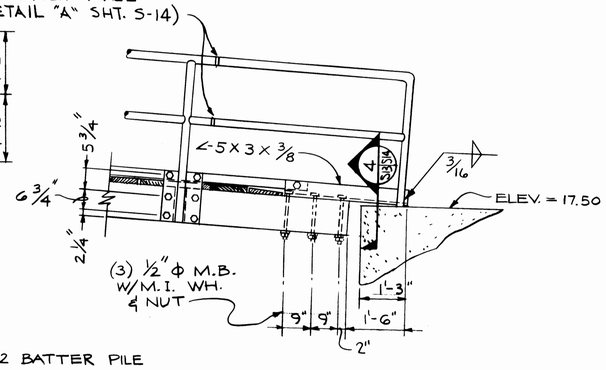

ELEVATION

SHORE TO PIER WALKWAY

1/2" = 1'-0"

AS BUILT SEPT. 84 **S13**

HENRY L. COOK — STATE OF WASHINGTON — REGISTERED PROFESSIONAL ENGINEER

DRAWN DJA DATE APRIL, 1983	PORT OF TACOMA
CHECKED W.S. DATE APRIL, 1983	WALKWAY PLAN & DETAILS
CHECKED HLC DATE MAY, 1983	TOTE PIER FACILITY BLAIR WATERWAY, 1983
CONT. NO.	
FIELD BOOK (S):	SCALE NOTED
APPROVED R L MacLeod CHIEF ENGINEER 5/20/83 DATE	DRAWING NO. EP 3823-12
	SHEET 22 OF 25

SITTS & HILL ENGINEERS
CIVIL, STRUCTURAL & SURVEYING
2301 SO. 40th TACOMA WA 98409

MARK	REVISION	BY	APP.	DATE