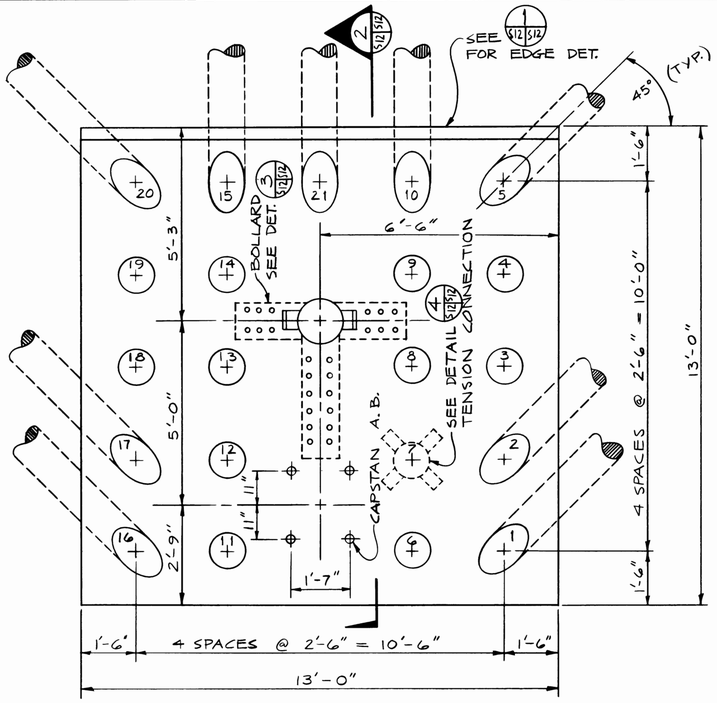

LAND BASED BOLLARD
PLAN VIEW
½" = 1'-0"

GENERAL NOTES

(1) ALL PILES ARE DOUGLAS FIR W/8" MIN. TIP DIAMETER. MIN. TIP EL. = -25.00
(2) f'c = 4000 PSI CLASS "B" CONCRETE F'y = 60,000 PSI
(3) PILES # 1, 2, 5, 10, 15, 16, 17, 20, 21 = 4:12 BATTER. ALL OTHERS PILES ARE PLUMB.
(4) PILES TO BE DRIVEN TO A MINIMUM BEARING CAPACITY OF 30 TONS.

NOTE: SEE SHEET S-1 FOR LOCATIONS (4 REQUIRED)

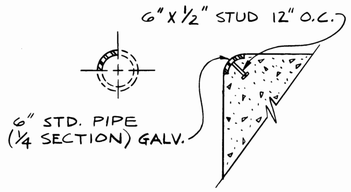

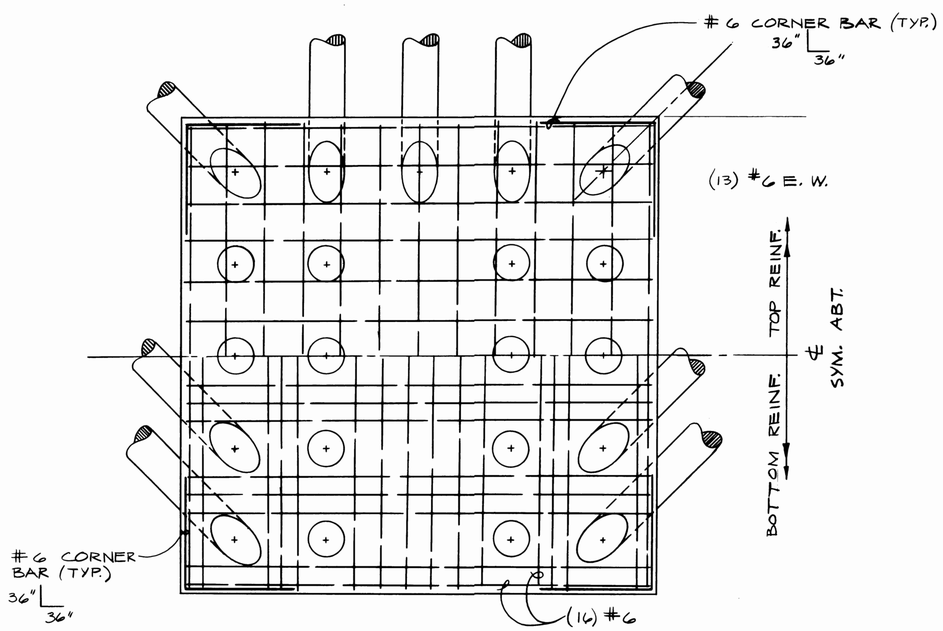

REINFORCING LAYOUT
½" = 1'-0"

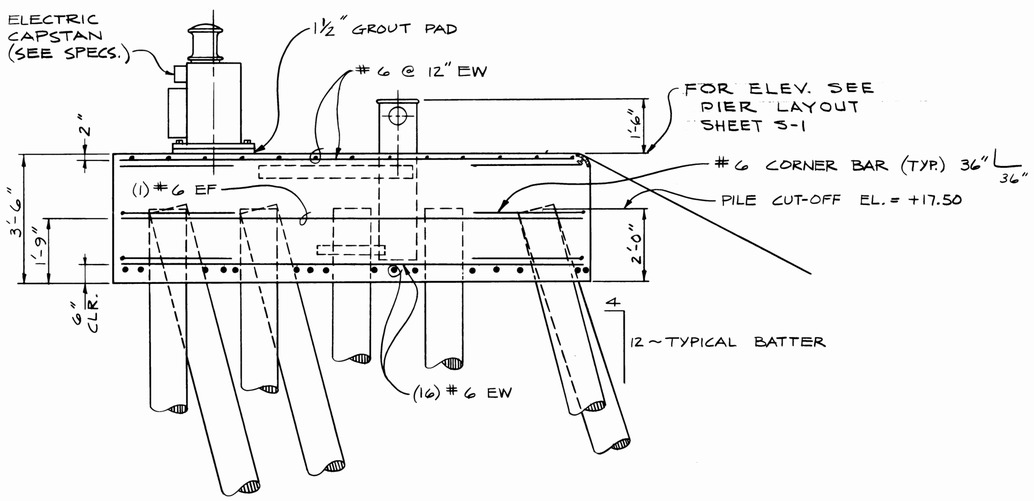

SECTION
½" = 1'-0"

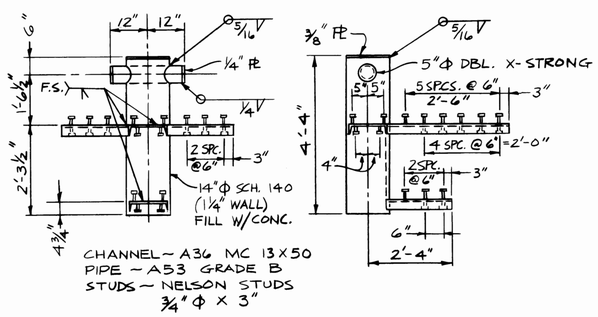

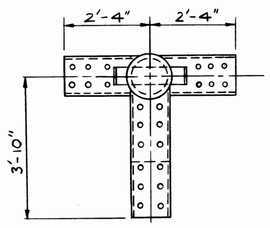

BOLLARD DETAIL
½' = 1'-0"

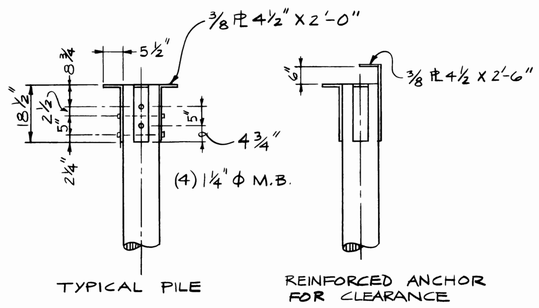

TYPICAL PILE
REINFORCED ANCHOR FOR CLEARANCE

TENSION CONNECTION
½" = 1'-0"

S 12

DRAWN DJA DATE APRIL, 1983	PORT OF TACOMA
CHECKED W.S. DATE APRIL, 1983	BOLLARD DETAILS
CHECKED HLC DATE MAY, 1983	TOTE PIER FACILITY BLAIR WATERWAY, 1983
CONT. NO.	
FIELD BOOK (S):	SCALE NOTED
APPROVED R.L. MacLeod CHIEF ENGINEER 5/20/83 DATE	DRAWING NO. EP 3823-12
	SHEET 21 OF 25

HENRY L. COOK — STATE OF WASHINGTON — REGISTERED PROFESSIONAL ENGINEER

AS BUILT SEPT. 84

SITTS & HILL ENGINEERS
CIVIL, STRUCTURAL & SURVEYING
2901 SO. 40th TACOMA WA 98409

MARK	REVISION	BY	APP.	DATE