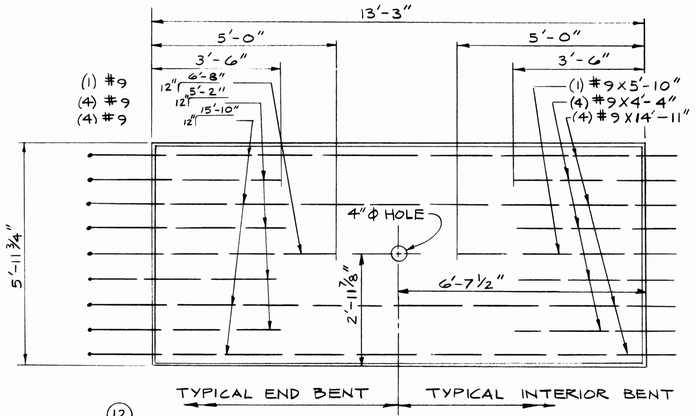

PLAN

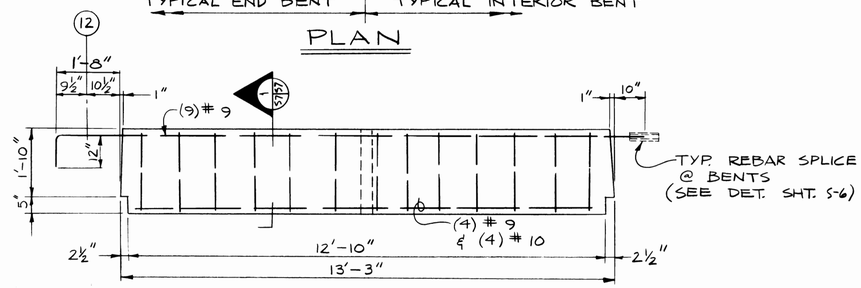

ELEVATION

(TYPE "B" PANEL)

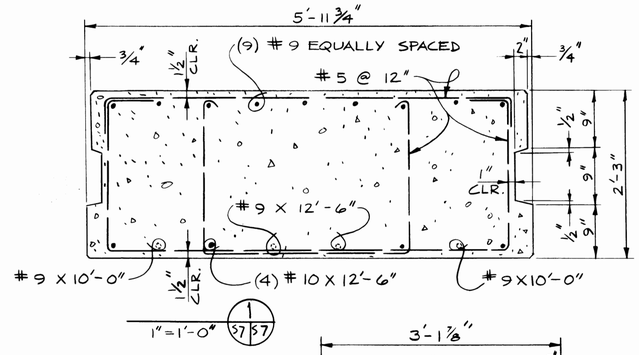

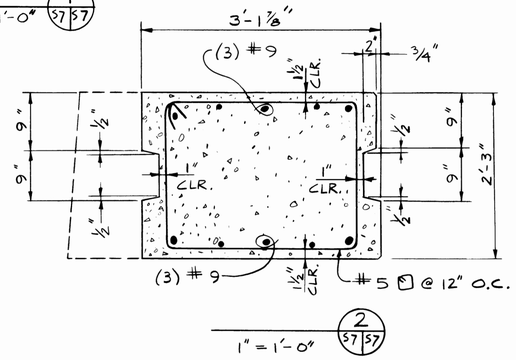

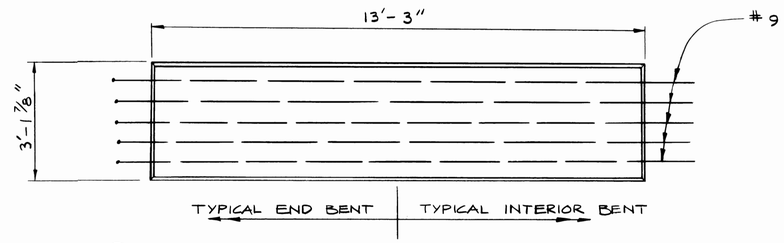

PLAN

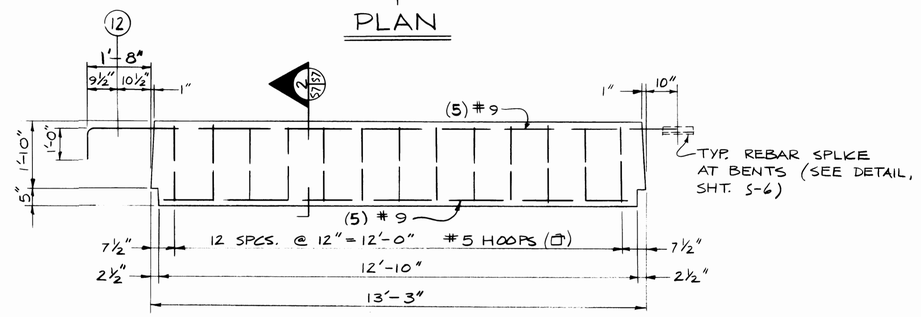

ELEVATION

(TYPE "B-1" PANEL)

PRECAST PANEL DETAILS

HEAVY LOAD SECTION ~ "B" & "B-1" PANELS

1/2" = 1'-0" (UNLESS NOTED)

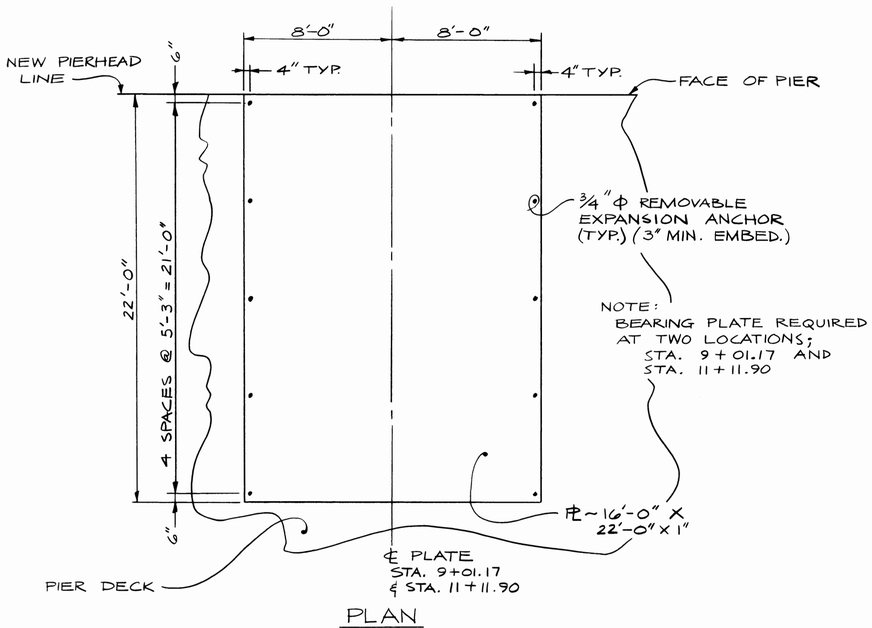

PLAN

WHEEL BEARING PLATE

1/4" = 1'-0"

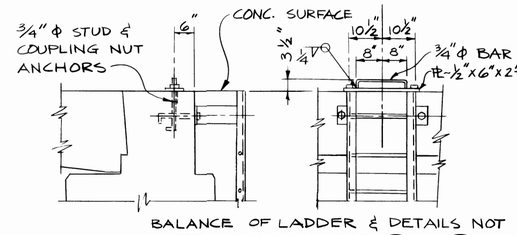

BALANCE OF LADDER & DETAILS NOT NOTED SAME AS SECT. 4 S3 S7 & 4 S4 S7

1/2" = 1'-0" 3 S4 S7

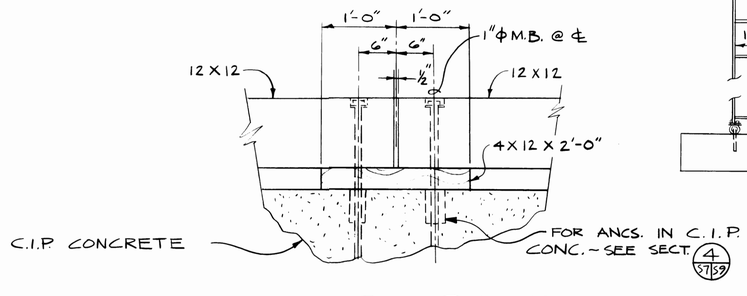

TYPICAL BULL RAIL SPLICE

1" = 1'-0"

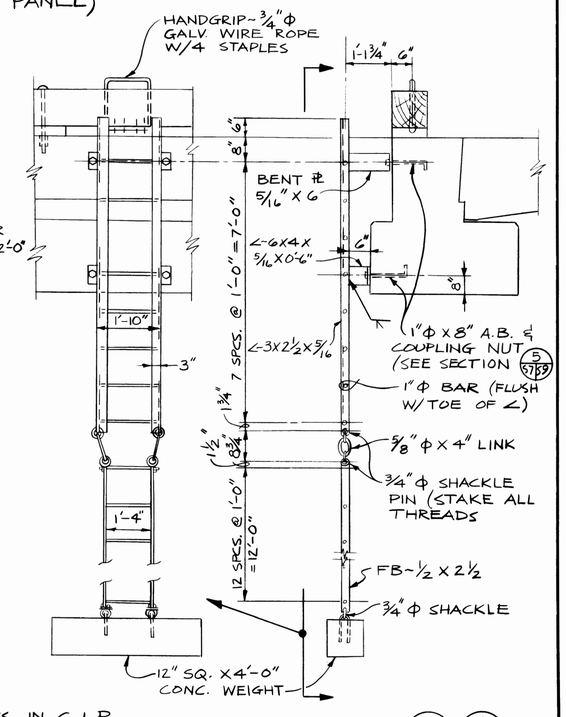

1/2" = 1'-0" 4 S3 S7 4 S4 S7

AS BUILT SEPT. 84

S 7

DRAWN DJA DATE APRIL, '83	PORT OF TACOMA
CHECKED W.S. DATE APRIL, '83	B & B1 PRECAST PANEL DETAILS AND WHEEL BEARING PLATES
CHECKED HLG DATE MAY, 1983	TOTE PIER FACILITY BLAIR WATERWAY, 1983
CONT. NO.	
FIELD BOOK(S):	SCALE NOTED
APPROVED R L MacLeod CHIEF ENGINEER	5/20/83 DATE
	DRAWING NO. EP 3823-12
	SHEET 16 OF 25

HENRY L. COOK — STATE OF WASHINGTON — REGISTERED PROFESSIONAL ENGINEER

SITTS & HILL ENGINEERS
CIVIL, STRUCTURAL & SURVEYING
2901 SO. 40th TACOMA WA 98409

MARK	REVISION	BY	APP.	DATE