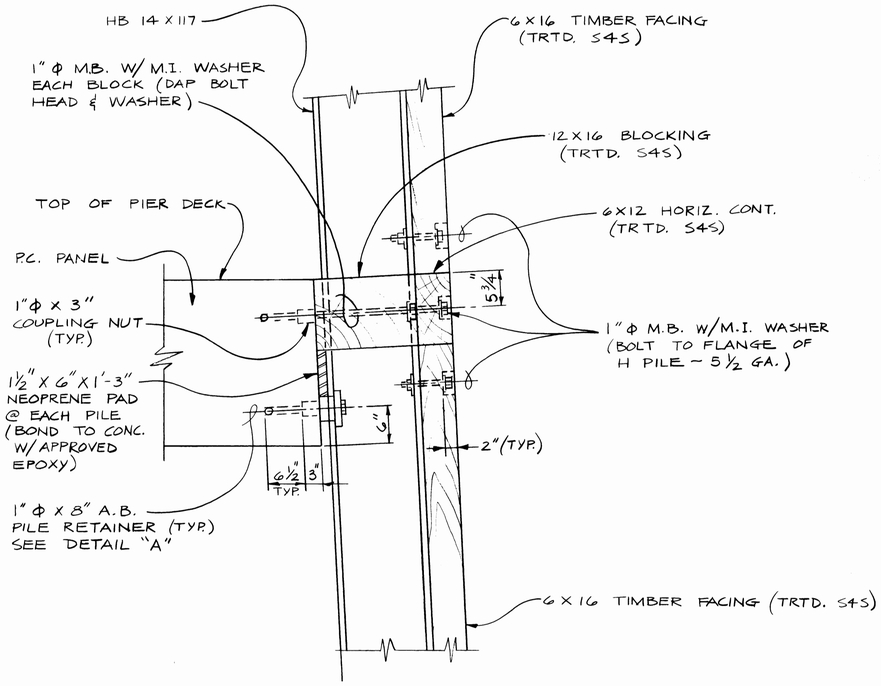

1
S10 S11

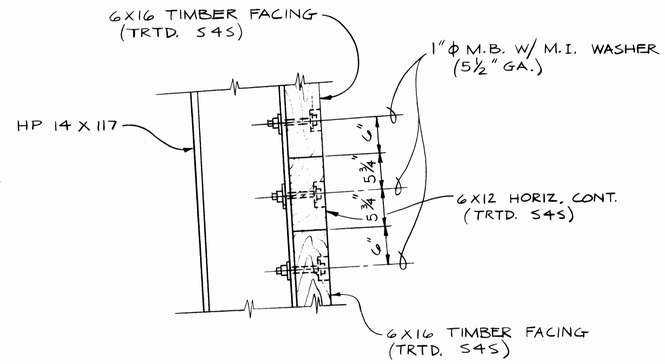

2
S10 S11

1/2" = 1'-0"

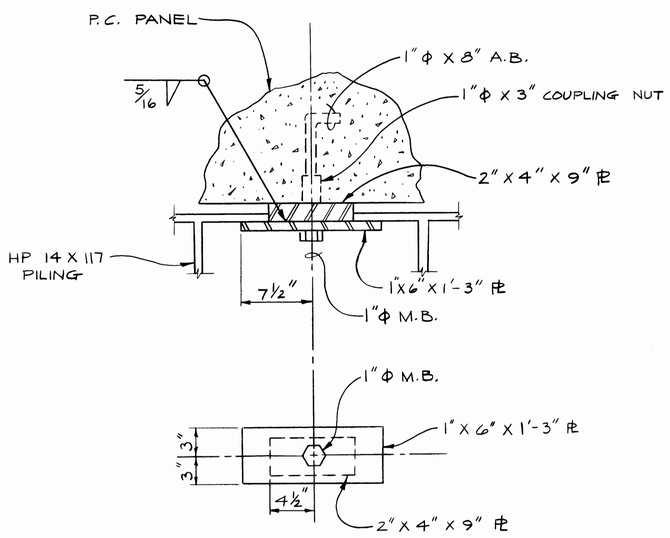

DETAIL "A"
1 1/2" = 1'-0"

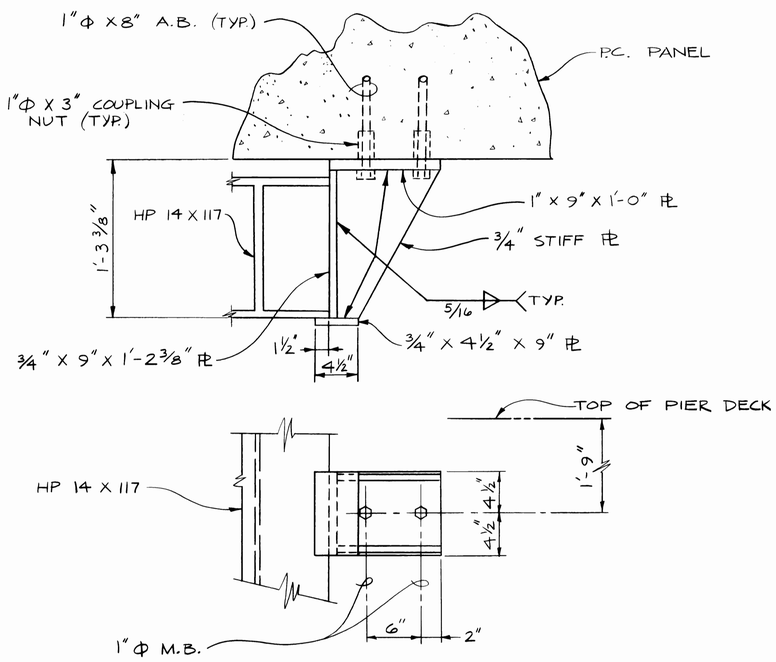

DETAIL "B"
1 1/2" = 1'-0"

AS BUILT SEPT. 84

S 11

HENRY L. COOK — STATE OF WASHINGTON — REGISTERED PROFESSIONAL ENGINEER

DRAWN DJA DATE APRIL, 1983	PORT OF TACOMA
CHECKED W.S. DATE APRIL, 1983	FENDER SYSTEM DETAILS
CHECKED HLC DATE MAY, 1983	TOTE PIER FACILITY BLAIR WATERWAY, 1983
CONT. NO.	
FIELD BOOK(S):	SCALE NOTED
APPROVED R L MacLeod CHIEF ENGINEER	5/20/83 DATE
	DRAWING NO. EP 3823-12
	SHEET 20 OF 25

MARK	REVISION	BY	APP.	DATE

SITTS & HILL ENGINEERS
CIVIL, STRUCTURAL & SURVEYING
2901 SO. 40th TACOMA WA 98409