PORT OF TACOMA

PONY LUMBER DOCK REPAIRS
PROJECT NO. 201140.01
CONTRACT NO. 071776

PORT COMMISSIONERS:

RICHARD P. MARZANO
DON MEYER
JOHN MCCARTHY
KRISTIN ANG
DEANNA KELLER

PORT STAFF:

JOHN WOLFE
NWSA Chief Executive Officer

ERIC JOHNSON
Port of Tacoma Executive Director

THAIS HOWARD, P.E.
Director of Engineering

BRETT OZOLIN, P.E.
Project Manager

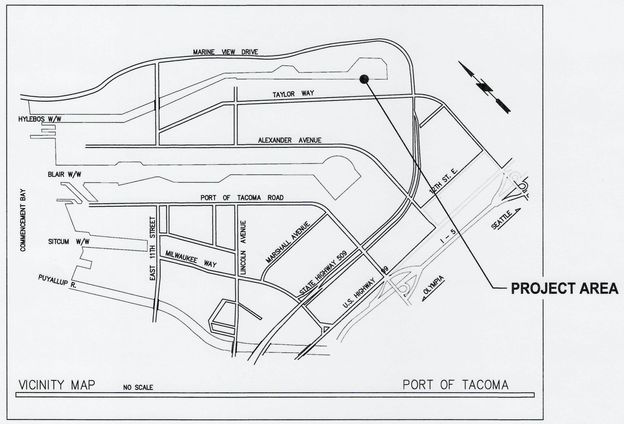

CONSULTANT:

moffatt & nichol
600 UNIVERSITY STREET, SUITE# 610
SEATTLE, WA 98101
(206) 622-0222

DRAWING LIST

SHEET DESIGNATION	SHEET #	SHEET TITLE	REVISION
T1	1	COVER SHEET, DRAWING LIST & LOCATION MAP	0
G1	2	GENERAL NOTES & ABBREVIATIONS	0
G2	3	OVERALL SITE PLAN	0
G3	4	REPAIR PLAN	0
G4	5	SHORELINE DEBRIS REMOVAL PLAN	0
G5	6	SHORELINE DEBRIS PHOTOS	0
S1	7	EXISTING SITE PHOTOS	0
S2	8	REPAIR SECTIONS & DETAILS (1 OF 2)	0
S3	9	REPAIR SECTIONS & DETAILS (2 OF 2)	0
S4	10	SHORELINE PROTECTION PLAN & DETAILS	0

Port of Tacoma
P.O. BOX 1837 TACOMA, WA 98401 (253)383-5841

moffatt & nichol

MARK:	REVISION:	BY:	APPR:	DATE:

STATE OF WASHINGTON REGISTERED PROFESSIONAL ENGINEER
10/22/2024

APPROVED:
N. COLSON 4/26/24
CHECKED BY DATE
A. PATTERSON 4/22/24
PROJ. ENGR DATE
DIRECTOR ENG. DATE
PRINTED BY: apatterson Oct 22, 2024
PORT ADDRESS:ONE SITCUM PLAZA
TACOMA, WA 98401-1837

PORT OF TACOMA
PONY LUMBER DOCK REPAIRS
COVER SHEET, DRAWING LIST & LOCATION MAP

6687
T1
1 OF 10

CONT/CONS: 071776
TOWNSHIP: RANGE: SECTION:
M. ID: DAT-HRZ: WA83-SF VERT: MLLW 19.39' @ Tide 22 1933
PHASE: BID SET PARCEL: DRAWING SCALE: AS NOTED

BINDING EDGE

Q:\SEA\10909-09\20 CADD_Active_SheetSet\1090909_1_T1.dwg 10/22/2024 9:54 AM

BINDING EDGE

GENERAL NOTES:

1. ALL FEDERAL, STATE AND LOCAL SAFETY REGULATIONS ARE TO BE STRICTLY FOLLOWED. METHODS OF DEMOLITION, CONSTRUCTION, AND ERECTION OF STRUCTURAL MATERIAL ARE THE CONTRACTOR'S RESPONSIBILITY.
2. THE CONTRACTOR SHALL SECURE ALL PERMITS REQUIRED BY ANY FEDERAL, STATE, OR LOCAL DEPARTMENTS, UTILITY COMPANIES OR JURISDICTIONS AFFECTED BY THE WORK.
3. THE CONTRACTOR SHALL ABIDE BY ALL APPLICABLE FEDERAL, STATE, AND LOCAL ENVIRONMENTAL PROTECTION STANDARDS, PERMITS, LAWS, AND REGULATIONS.
4. THE CONTRACTOR SHALL PLACE CONSTRUCTION DEBRIS CONTROL DEVICES, BOOMS, TARPAULINS, AND OTHER DEVICES AS NECESSARY TO PREVENT DEBRIS FROM ENTERING THE WATER, AND AIR BORNE MATERIALS FROM LEAVING THE IMMEDIATE VICINITY OF THE SITE. THE CONTRACTOR SHALL BE RESPONSIBLE FOR CLEANUP OF ANY MATERIALS DEPOSITED OUTSIDE THE WORK AREA.
5. ALL DEBRIS SHALL BE DISPOSED OFF OF THE PROJECT SITE IN A PERMITTED LANDFILL.
6. COORDINATE ACCESS TO THE SITE WITH THE PORT OF TACOMA.
7. CONTRACTOR SHALL VERIFY ALL DIMENSIONS AND CONDITIONS FOR COMPATIBILITY BEFORE PROCEEDING. ANY DISCREPANCIES IN DIMENSIONS OR SITE CONDITIONS SHALL BE BROUGHT TO THE ATTENTION OF THE ENGINEER BEFORE PROCEEDING. THE CONTRACTOR SHALL NOT BEGIN CONSTRUCTION UNTIL THE DISCREPANCY HAS BEEN RESOLVED BY THE ENGINEER.
8. CONTRACTOR INITIATED CHANGES SHALL BE SUBMITTED IN WRITING TO THE ENGINEER FOR APPROVAL PRIOR TO FABRICATION OR CONSTRUCTION. CHANGES SHOWN ON SHOP DRAWINGS ONLY WILL NOT SATISFY THIS REQUIREMENT.
9. CONTRACTOR SHALL BE RESPONSIBLE FOR ERECTION STABILITY AND TEMPORARY SUPPORT AS NECESSARY.
10. IN THE EVENT THAT EXISTING CONDITIONS DIFFER FROM THE PROJECT DRAWINGS, CONTACT THE ENGINEER PRIOR TO INITIATING CONSTRUCTION.
11. CONTRACTOR SHALL BE RESPONSIBLE TO PROTECT ALL EXISTING SURFACES OR STRUCTURES THAT WILL REMAIN, OR BE REINSTALLED. ANY DAMAGE INCURRED IN THE EXECUTION OF THIS CONTRACT, TO ANY PART OF THE PROPERTY, STRUCTURES, OR UTILITIES NOT SPECIFICALLY DESIGNATED FOR DEMOLITION, SHALL BE REPAIRED, REPLACED, AND/OR RECONSTRUCTED BY THE CONTRACTOR AT IT'S EXPENSE, TO THE PRE-DISTURBED CONDITIONS

SPECIAL INSPECTION

1. SPECIAL INSPECTION SHALL BE PROVIDED AS FOLLOWS:

MATERIAL	INSPECTION ITEM	CONTINUOUS	PERIODIC	REFERENCE STANDARD
STEEL	VISUALLY INSPECT WELDS		X	AWS D1.1
CONCRETE	INSPECT REINFORCING AND VERIFY PLACEMENT		X	ACI 318
CONCRETE	INSPECT FORMWORK FOR SHAPE, LOCATION, AND DIMENSIONS OF THE CONCRETE MEMBER BEING FORMED.		X	ACI 318
CONCRETE	INSPECT ANCHORS AND DOWELS POST-INSTALLED IN HARDENED CONCRETE	X		ACI 318, MANUFACTURER'S INSTRUCTIONS
CONCRETE	VERIFY USE OF REQUIRED DESIGN MIX		X	ACI 318
CONCRETE	FABRICATE SPECIMENS FOR TEST, PERFORM SLUMP, AIR CONTENT TESTS, AND DETERMINE TEMPERATURE OF CONCRETE.	X		ASTM C172 ASTM C31 ACI 318
CONCRETE	VERIFY MAINTENANCE OF SPECIFIED PLACEMENT AND TECHNIQUES.		X	ACI 318

GENERAL STRUCTURAL NOTES:

CODES AND STANDARDS

1. ALL MATERIALS, WORKMANSHIP, DESIGN AND CONSTRUCTION SHALL CONFORM TO THE DRAWINGS AND THE INTERNATIONAL BUILDING CODE (IBC), CURRENT EDITION, AS AMENDED BY THE CITY OF TACOMA. SPECIFICATIONS AND STANDARDS REFERENCED ON THE DRAWINGS ARE TO BE THE LATEST EDITION.
2. ALL CONSTRUCTION IS TO BE COMPLETED IN A WORKMANLIKE MANNER IN ACCORDANCE WITH THE CURRENT EDITION OF THE FOLLOWING CODES AND STANDARDS (PARTIAL LIST):
   A. IBC
   C. AISC
   D. AWS D1.1
   E. NDS

STEEL AND MISCELLANEOUS METAL

1. ALL STEEL WORK SHALL BE IN ACCORDANCE WITH AISC SPECIFICATIONS FOR DESIGN, FABRICATION AND ERECTION OF STRUCTURAL STEEL FOR BUILDINGS (AISC) LATEST EDITION.
2. STEEL MATERIALS SHALL CONFORM TO THE FOLLOWING, UNLESS OTHERWISE NOTED.
   A. MISC. PLATES, BARS, ANGLES, AND CHANNEL ASTM A36
   B. BOLTS IN WOOD ASTM A307
   C. W SHAPES ASTM A992 GR50
   D. BOLTS IN STEEL ASTM A325
   E. NUTS SHALL BE ASTM A563, UON
   F. WASHERS SHALL BE ASTM F436, UON
3. ALL STEEL SHAPES, PLATES, OTHER FABRICATIONS, AND ALL HARDWARE SHALL BE HOT DIP GALVANIZED AFTER FABRICATION IN ACCORDANCE WITH ASTM A123 AND ASTM A153 AS APPROPRIATE. PROVIDE ALL NECESSARY VENT HOLES IN APPROVED LOCATIONS FOR HOT DIP GALVANIZING.
4. ALL WELDING SHALL CONFORM TO AWS D1.1 LATEST EDITION.

CONCRETE ANCHORS

1. USE OF DRILLED ADHESIVE CONCRETE ANCHORS, WHERE NOT SPECIFIED IN THE DOCUMENTS, SHALL BE SUBJECT TO APPROVAL BY THE ENGINEER.
2. EPOXY OR ADHESIVE ANCHORS SHALL BE INSTALLED IN ACCORDANCE WITH THE MANUFACTURES'S RECOMMENDATIONS. SPECIAL INSPECTION IS REQUIRED FOR ADHESIVE ANCHORS.
3. ACCEPTABLE ADHESIVES ARE HILTI HIT HY 200, ICE, OR HVA SYSTEMS; OR SIMPSON EPOXY TIE (SET) SYSTEM. INTERNATIONAL CONFERENCE OF BUILDING OFFICIALS (ICBO) OR INTERNATIONAL CODE COUNCIL (ICC) REPORTS SHALL BE SUBMITTED FOR ALL ADHESIVE ANCHOR PRODUCTS.
4. EXPANSION ANCHORS ARE NOT ACCEPTABLE.
5. HILTI HIT HY 200 OR SIMPSON SET ADHESIVES SHALL BE USED FOR GROUTING REBAR DOWELS.

TIMBER

1. ALL TIMBER FRAMING SHALL BE PRESSURE TREATED DOUGLAS FIR/LARCH NO. 1.
2. ALL TIMBER CONSTRUCTION SHALL CONFORM TO THE RECOMMENDATIONS OF THE AMERICAN INSTITUTE OF TIMBER CONSTRUCTION.
3. TIMBER MEMBERS SHOWN ARE NOMINAL SIZES.
4. NAILS, BOLTS, NUTS, AND WASHERS AND OTHER CONNECTING HARDWARE SHALL BE HOT DIPPED GALVANIZED IN ACCORDANCE WITH ASTM A123 AND ASTM A153 AS APPROPRIATE, UON.
5. WASHERS SHALL BE USED UNDER ALL BOLT HEADS AND NUTS THAT WOULD OTHERWISE COME INTO DIRECT CONTACT WITH WOOD.
6. BORE HOLES FOR THROUGH BOLTS WITH A BIT 1/16 INCH LARGER IN DIAMETER THAN THE SHANK OF THE BOLT UON
7. PROVIDE NEW BOLTS OR LAGS FOR REINSTALLATION OF STRAPS AND CONNECTORS. MATCH SIZE OF EXISTING BOLTS OR LAGS.

REINFORCING STEEL:

1. ALL REINFORCING BARS SHALL CONFORM TO ASTM A615, GRADE 60.
2. MINIMUM CONCRETE COVER FOR REINFORCING BARS SHALL BE 3".
3. REINFORCING BARS SHALL NOT BE WELDED WITHOUT PORT APPROVAL. REINFORCING BARS TO BE WELDED SHALL BE ASTM A 706 GR 60.

CONCRETE REPAIR NOTES:

1. CONTRACTOR SHALL PROVIDE CATCHMENT DEVICE DURING REPAIR WORK TO PREVENT CONCRETE CHIPS AND OTHER DEBRIS FROM FALLING INTO THE WATER.
2. CHIPPED OUT AREA SHALL BE NOT LESS THAN 1" CLEAR AROUND ALL EXPOSED REINFORCING BARS.
3. EDGES OF CHIPPED OUT AREAS SHALL BE SAWCUT PERPENDICULAR TO THE CONCRETE SURFACE TO A MINIMUM DEPTH OF 1" OR 1/4" ABOVE THE SHALLOWEST REINFORCEMENT DEPTH, WHICHEVER IS LESS.
4. ALL EXPOSED REINFORCING BARS SHALL BE CLEANED OF ALL SCALE, RUST, DIRT, OIL, OR ANY OTHER DELETERIOUS MATERIAL.
5. ALL FORMS SHALL BE WATER TIGHT.
6. REMOVE EXCESS CEMENTITIOUS MATERIALS AND PARTICULATE SLURRY BEFORE CURING.
7. PREPARE, PLACE, AND CURE REPAIR MATERIAL IN ACCORDANCE WITH THE CONTRACT DOCUMENTS.
8. PROVIDE 3/4" CHAMFER ON ALL CAST-IN-PLACE EXPOSED CORNERS, UON.
9. AT ALL INTERFACES BETWEEN EXISTING CONCRETE AND NON-SHRINK GROUT, ROUGHEN EXISTING SURFACE TO A 1/4" AMPLITUDE.

GROUT

1. GROUT SHALL BE SIKAGROUT 328, BY SIKA CORPORATION, OR APPROVED EQUAL. INSTALL PER MANUFACTURER RECOMMENDATIONS.

DESIGN CRITERIA

1. ALLOWABLE LIVE LOAD FOR REPLACEMENT DECK PANELS
   A. 200 PSF
   B. H-20 AASHTO TRUCK

CONCRETE.

1. CONCRETE STRENGTH AT 28 DAYS SHALL BE 5000 PSI FOR ALL CAST IN PLACE CONCRETE.
2. CONCRETE TOPPING SHALL INCLUDE FIBROUS REINFORCING.

ABBREVIATIONS:

ACI	AMERICAN CONCRETE INSTITUTE
ACZA	AMMONIACAL COPPER ZINC ARSENATE
APPR	APPROVED
APPROX	APPROXIMATE(LY)
ASCE	AMERICAN SOCIETY OF CIVIL ENGINEERS
AISC	AMERICAN INSTITUTE OF STEEL CONSTRUCTION
ASTM	AMERICAN SOCIETY FOR THE TESTING OF MATERIALS
AVE	AVENUE
AWS	AMERICAN WELDING SOCIETY
AWWA	AMERICAN WATER WORKS ASSOCIATION
AWPA	AMERICAN WOOD PROTECTION ASSOCIATION
BTM	BOTTOM
CDF	CONTROLLED DENSITY FILL
CLR	CLEAR
CONC	CONCRETE
CONT'D	CONTINUOUS
DEMO	DEMOLISH / DEMOLITION
DF	DOUGLAS FIR
DIA	DIAMETER
DIST	DISTANCE
EA	EACH
ELEV	ELEVATION
EQ	EQUAL
EW	EACH WAY
EXIST	EXISTING
EXP	EXPOSURE
FT	FOOT / FEET
GALV	GALVANIZED
HDG	HOT DIP GALVANIZED
HORIZ	HORIZONTAL
HDPE	HIGH DENSITY POLYETHYLENE
HSS	HOLLOW STRUCTURAL SECTION
IBC	INTERNATIONAL BUILDING CODE
LF	LINEAR FOOT
MAX	MAXIMUM
MHHW	MEAN HIGHER HIGH WATER
MIN	MINIMUM
MISC	MISCELLANEOUS
MLW	MEAN LOW WATER
MLLW	MEAN LOWER LOW WATER
MSL	MEAN SEA LEVEL
NDS	NATIONAL DESIGN STANDARD
NTS	NOT TO SCALE
NO	NUMBER
OC	ON CENTER
PSF	POUNDS PER SQUARE FOOT
PSI	POUNDS PER SQUARE INCH
R	RADIUS
REF	REFERENCE
REQ'D	REQUIRED
S4S	SURFACED FOUR SIDES
SCH	SCHEDULE
SF	SQUARE FOOT
SIM	SIMILAR
SPECS	SPECIFICATIONS
SQ	SQUARE
STD	STANDARD
SST	STAINLESS STEEL
SW	SOUTHWEST
T&B	TOP AND BOTTOM
TYP	TYPICAL
UHMW-PE	ULTRA HIGH MOLECULAR WEIGHT POLYETHYLENE
UON	UNLESS OTHERWISE NOTED
VERT	VERTICAL
W/	WITH
WSDOT	WASHINGTON STATE DEPARTMENT OF TRANSPORTATION
WWPA	WESTERN WOOD PRODUCTS ASSOCIATION

Port of Tacoma
P.O. BOX 1837 TACOMA, WA 98401 (253)383-5841

moffatt & nichol

MARK:	REVISION:	BY:	APPR:	DATE:

10/22/2024

N. COLSON 4/26/24
CHECKED BY DATE
A. PATTERSON 4/22/24
PROJ. ENGR DATE
apatterson Oct 22, 2024
ONE SITCUM PLAZA
TACOMA, WA 98401-1837

APPROVED:
DIRECTOR ENG. DATE

PORT OF TACOMA
PONY LUMBER DOCK REPAIRS
GENERAL NOTES & ABBREVIATIONS

TOWNSHIP: | RANGE: | SECTION:
DAT-HRZ: WA83-SF | VERT: MLLW 19.39' @ Tide 22 1933
PARCEL: | DRAWING SCALE: AS NOTED
PRINTED BY:
PORT ADDRESS:

6687
G1
2 OF 10
CONT/CONS: 071776
M. ID:
PHASE: BID SET

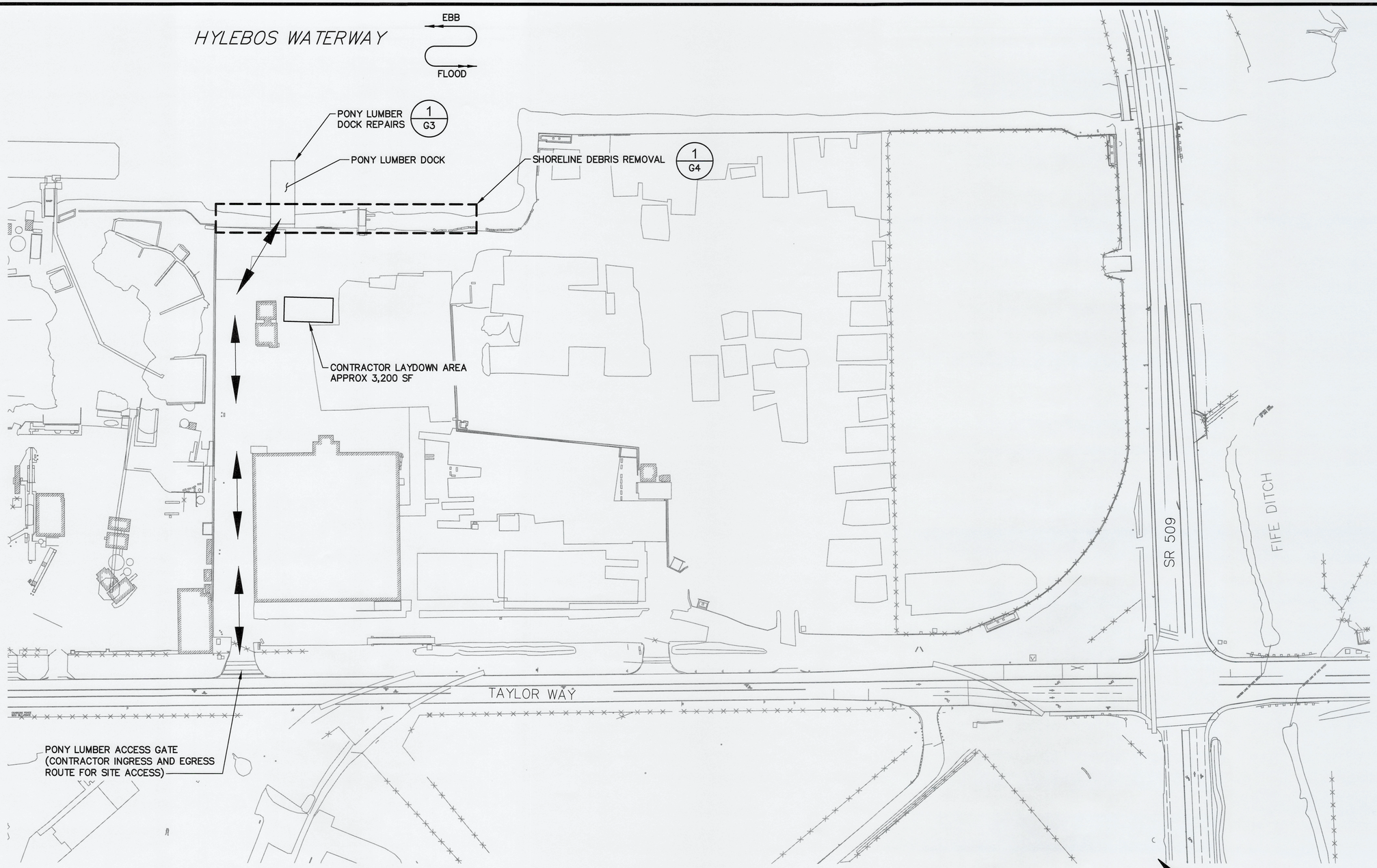

1 – **PONY LUMBER - OVERALL PLAN**
SCALE: 1"=80'

100' 0' 100' 200'
SCALE: 1"=80'

Port of Tacoma
P.O. BOX 1837 TACOMA, WA 98401 (253)383-5841

moffatt & nichol

MARK:	REVISION:	BY:	APPR:	DATE:

10/22/2024

APPROVED:
N. COLSON 4/26/24
CHECKED BY DATE
A. PATTERSON 4/22/24
DIRECTOR ENG. DATE | PROJ. ENGR DATE

PORT OF TACOMA
PONY LUMBER DOCK REPAIRS
OVERALL SITE PLAN

6687
G2
3 OF 10

CONT/CONS: 071776
M. ID:
PHASE: BID SET

TOWNSHIP:
RANGE:
SECTION:
DAT-HRZ: WA83-SF
VERT: MLLW 19.39' @ Tide 22 1933
PARCEL:
DRAWING SCALE: AS NOTED

PRINTED BY: apatterson Oct 22, 2024
PORT ADDRESS: ONE SITCUM PLAZA
TACOMA, WA 98401-1837

BINDING EDGE

Q:\SEA\109909-09\20 CADD_Active_SheetSet\1090909_3_G2.dwg 10/22/2024 9:54 AM

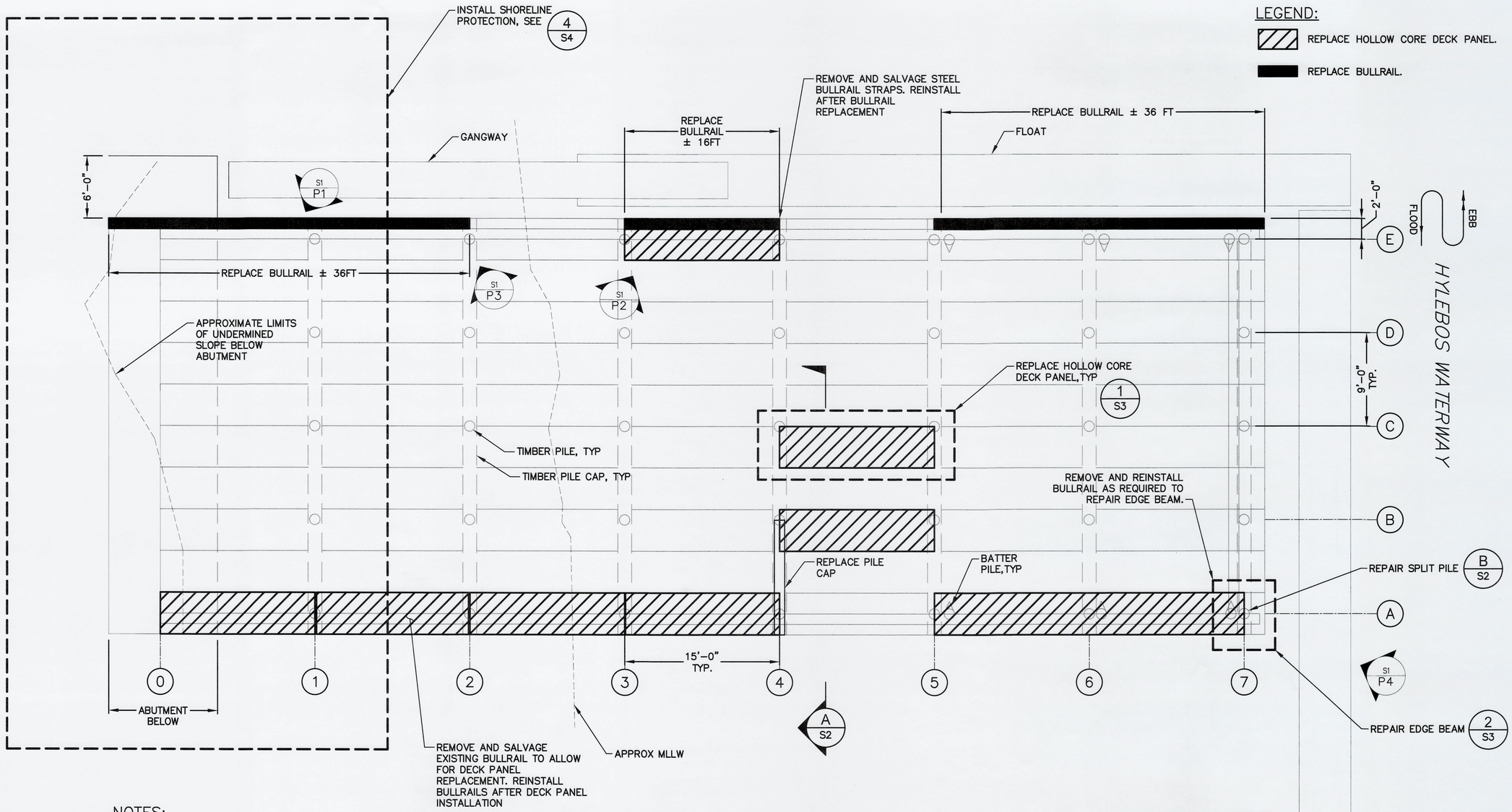

LEGEND:

REPLACE HOLLOW CORE DECK PANEL.

REPLACE BULLRAIL.

NOTES:

1. DIMENSIONS ARE APPROXIMATE. FIELD MEASURE AS REQUIRED FOR FABRICATION AND FITUP OF ALL COMPONENTS.

1/G2 **PONY LUMBER - REPAIR PLAN**
SCALE: 1"=5'

5'-0" 0'-0" 5'-0" 10'-0"
SCALE: 1" = 5'-0"

Port of Tacoma
P.O. BOX 1837 TACOMA, WA 98401 (253)383-5841

moffatt & nichol

MARK:	REVISION:	BY:	APPR:	DATE:

10/22/2024

APPROVED:
DIRECTOR, ENG. DATE

N. COLSON 4/26/24
CHECKED BY DATE
A. PATTERSON 4/22/24
PROJ. ENGR DATE
PRINTED BY: apatterson Oct 22, 2024
PORT ADDRESS: ONE SITCUM PLAZA
TACOMA, WA 98401-1837

PORT OF TACOMA
PONY LUMBER DOCK REPAIRS
REPAIR PLAN

6687
G3
4 OF 10

CONT/CONS: 071776
M. ID:
PHASE: BID SET

TOWNSHIP:
DAT-HRZ: WA83-SF
PARCEL:

RANGE:
VERT: MLLW 19.39' @ Tide 22 1933

SECTION:
DRAWING SCALE: AS NOTED

BINDING EDGE

Q:\SEA\10909-09\20 CADD_Active_SheetSet\1090909_3_G3.dwg 10/22/2024 9:54 AM

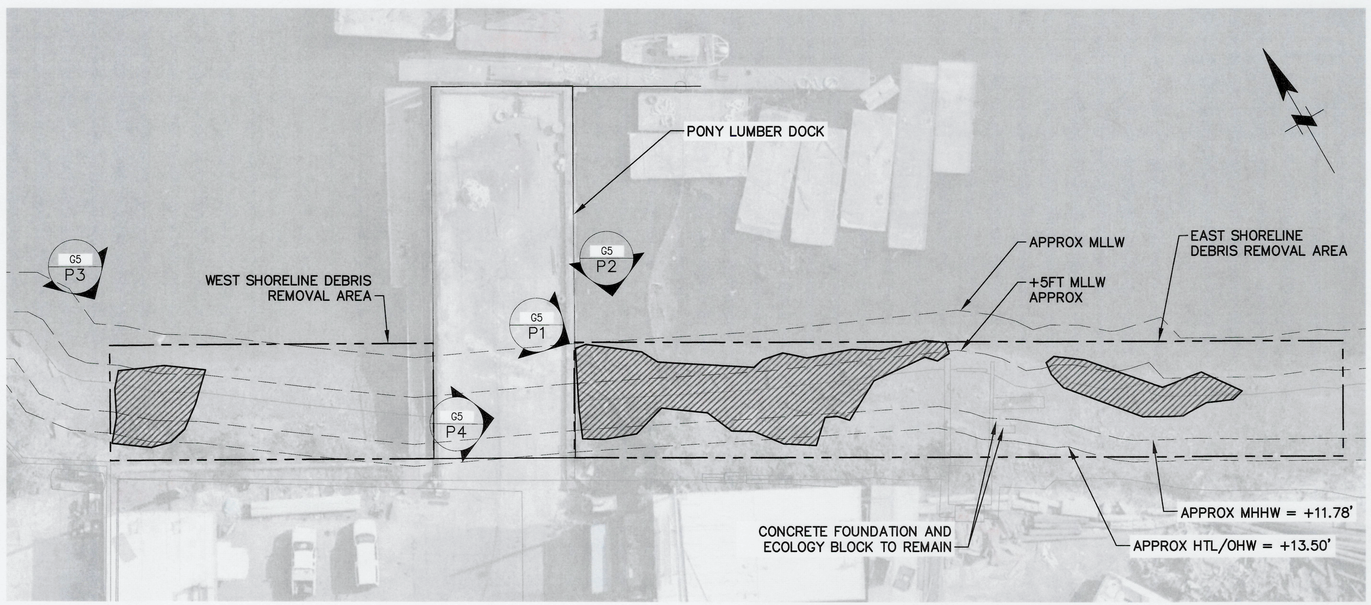

1 / G2 **SHORELINE DEBRIS REMOVAL PLAN**
SCALE: 1"=20'

LEGEND:

REMOVE AND DISPOSE DEBRIS

NOTES:

1. DEBRIS REMOVAL AREAS SHOWN ARE APPROXIMATE. COORDINATE DEBRIS REMOVAL ITEMS AND QUANTITIES WITH THE ENGINEER PRIOR TO REMOVAL.
2. THE PERMITTED WORK REQUIRES DEBRIS REMOVAL FROM AN AREA TOTALING 7,638 SQUARE FEET. THE PERMIT INTENT IS TO SUBSTANTIALLY REMOVE ALL NON–NATIVE DEBRIS TO THE EXTENT PRACTICAL AS SHOWN IN THE DEBRIS REMOVAL AREAS.
3. NO DEBRIS SHALL BE REMOVED WITHOUT THE ENGINEER ONSITE
4. THE ENGINEER SHALL PROVIDE BEFORE AND AFTER PHOTOGRAPHS REQUIRED FOR PERMIT COMPLIANCE
5. THE PROPERTY HISTORICALLY OPERATED AS A LOG YARD. THE EXISTING CONCRETE FOUNDATION FOR THE YARDING/LOG HANDLING OPERATIONS SHALL NOT BE INCLUDED IN THE BASE BID. SEE PHOTO P1 ON SHEET G5.
6. SHORELINE DEBRIS REMOVAL AREAS MAY BE ADJUSTED AT THE DISCRETION OF THE ENGINEER, BUT THE TOTAL DEBRIS REMOVAL AREA SHALL NOT BE LESS THAN 7,638 SQUARE FEET. THE 7,638 SQUARE FOOT DEBRIS REMOVAL AREA INCLUDES DEBRIS FREE AREAS WITHIN THE SHORELINE.
7. THE BID SHALL BE BASED ON THE ASSUMED TONNAGE IN THE BASE BID.

20' 0' 20' 40'
SCALE: 1"=20'

Port of Tacoma
P.O. BOX 1837 TACOMA, WA 98401 (253)383-5841

moffatt & nichol

MARK:	REVISION:	BY:	APPR:	DATE:

10/22/2024

N. COLSON 4/26/24
CHECKED BY DATE
A. PATTERSON 4/22/24
PROJ. ENGR DATE
Oct 22, 2024
TACOMA, WA 98401–1837

APPROVED:
DIRECTOR ENG. DATE
PRINTED BY: apatterson
PORT ADDRESS: ONE SITCUM PLAZA

PORT OF TACOMA
PONY LUMBER DOCK REPAIRS
SHORELINE DEBRIS REMOVAL PLAN

6687
G4
5 OF 10

CONT/CONS: 071776 | TOWNSHIP: | RANGE: | SECTION:
M. ID: | DAT–HRZ: WA83–SF | VERT: MLLW 19.39 @ Tide 22 1933
PHASE: BID SET | PARCEL: | DRAWING SCALE: AS NOTED

BINDING EDGE

Q:\SEA\10909-09\20 CADD_Active_SheetSet\1090909_3_G4.dwg 10/22/2024 9:54 AM

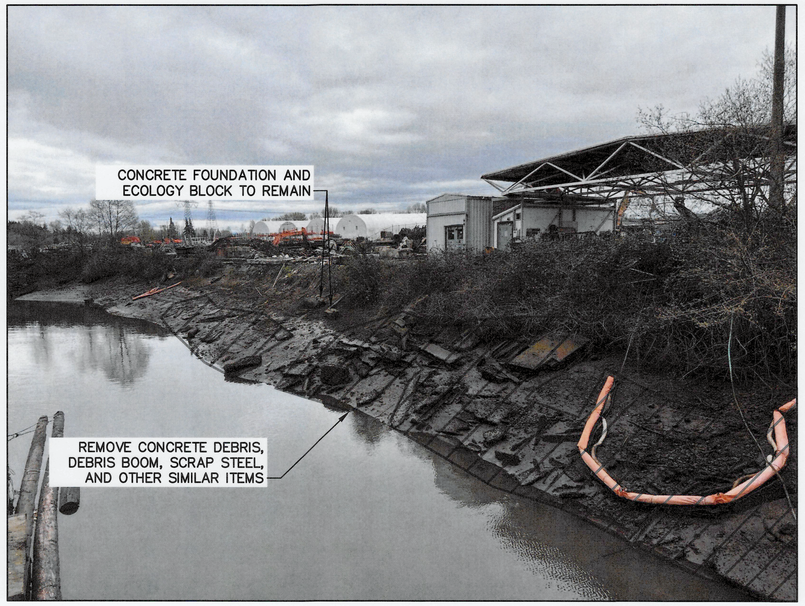

P1 – **EAST SHORELINE DEBRIS REMOVAL**
LOOKING: EAST

P2 – **EAST SHORELINE DEBRIS REMOVAL**
LOOKING: SOUTH

P3 – **WEST DEBRIS REMOVAL**
LOOKING: EAST

P3 – **UNDERDECK DEBRIS REMOVAL**
LOOKING: SOUTH

LEGEND:

REMOVE AND DISPOSE DEBRIS

NOTES:

1. SEE SHEET G4 FOR DEBRIS REMOVAL NOTES.

Port of Tacoma
P.O. BOX 1837 TACOMA, WA 98401 (253)383-5841

moffatt & nichol

MARK:	REVISION:	BY:	APPR:	DATE:

10/22/2024

APPROVED:	N. COLSON 4/26/24
	CHECKED BY DATE
DIRECTOR ENG. DATE	A. PATTERSON 4/22/24
	PROJ. ENGR DATE
PRINTED BY:	apatterson Oct 22, 2024
PORT ADDRESS:	ONE SITCUM PLAZA
	TACOMA, WA 98401-1837

PORT OF TACOMA
PONY LUMBER DOCK REPAIRS
SHORELINE DEBRIS PHOTOS

6687
G5
6 OF 10

CONT/CONS: 071776	TOWNSHIP:	RANGE:	SECTION:
M. ID:	DAT-HRZ: WA83-SF	VERT: MLLW 19.39' @ Tide 22 1933	
PHASE: BID SET	PARCEL:	DRAWING SCALE: AS NOTED	

BINDING EDGE

Q:\SEA\10909-09\20 CADD_Active_SheetSet\1090909_3_G5.dwg 10/22/2024 9:55 AM

BINDING EDGE

P1 G3 **UNDERMINING AT ABUTMENT**
LOOKING: SOUTH

P2 G3 **BULLRAIL**
LOOKING: WEST

P3 G3 **BULLRAIL STRAP AND BLOCKING**
LOOKING: WEST

P4 G3 **SPLIT PILE**
LOOKING: SOUTH

Port of Tacoma
P.O. BOX 1837 TACOMA, WA 98401 (253)383-5841

moffatt & nichol

MARK:	REVISION:	BY:	APPR:	DATE:

10/22/2024

APPROVED:
DIRECTOR ENG. DATE

N. COLSON 4/26/24
CHECKED BY DATE
A. PATTERSON 4/22/24
PROJ. ENGR DATE
PRINTED BY: gpatterson Oct 22, 2024
PORT ADDRESS: ONE SITCUM PLAZA
TACOMA, WA 98401-1837

PORT OF TACOMA
PONY LUMBER DOCK REPAIRS
EXISTING SITE PHOTOS

6687
S1
7 OF 10

CONT/CON'S: 071776
M. ID:
PHASE: BID SET

TOWNSHIP:
RANGE:
SECTION:
DAT-HRZ: WA83-SF
VERT: MLLW 19.39 @ Tide 22 1933
PARCEL:
DRAWING SCALE: AS NOTED

Q:\SEA\10909-09\20 CADD_Active_SheetSet\1090909_4_S1.dwg 10/22/2024 9:55 AM

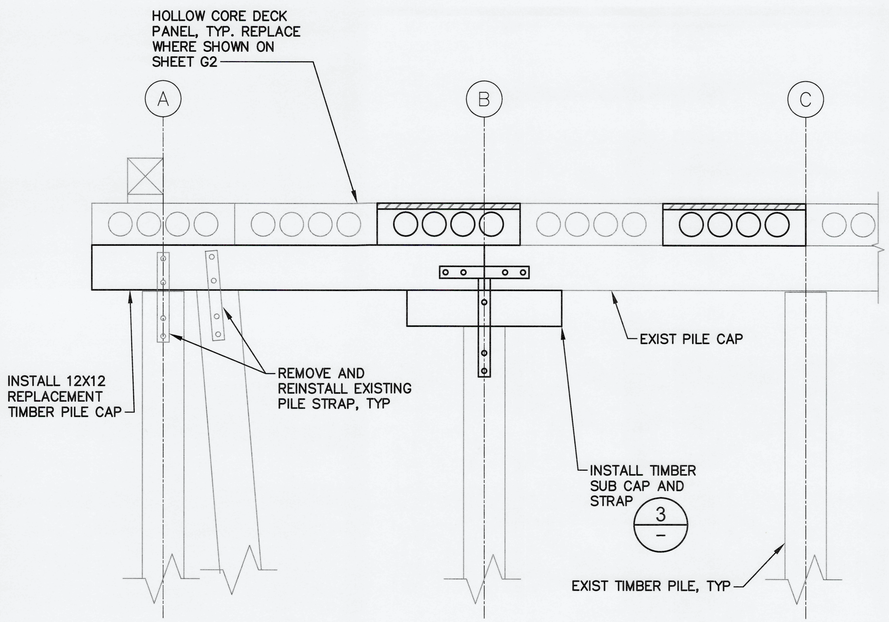

A / G2 **SECTION**
SCALE: 1/2" = 1'–0"

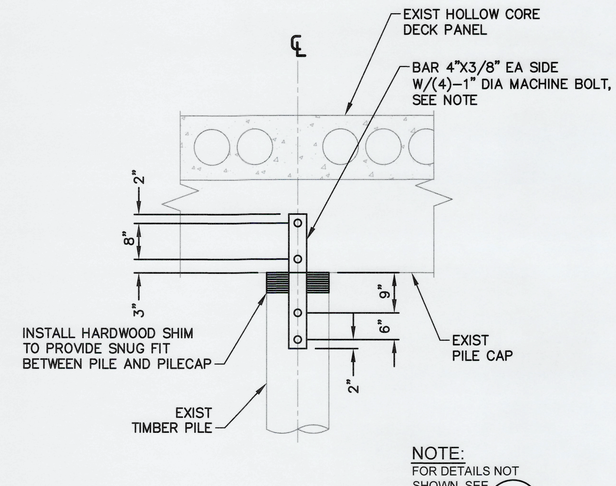

NOTE:
FOR DETAILS NOT SHOWN, SEE A / –

2 / – **DETAIL - STRAP**
SCALE: 3/4" = 1'–0"

NOTES:

1. CONTRACTOR SHALL DESIGN AND PROVIDE TEMPORARY SUPPORT TO EXISTING STRUCTURE AT PILE CAP REPLACEMENT LOCATIONS. SEE STRUCTURAL NOTES ON SHEET G1.
2. SEE PLANS FOR LOCATION AND LIMITS OF PILE CAP REPLACEMENT.
3. DRIFT PINS, SPIKES, & NAILS WILL BE ENCOUNTERED DURING REMOVAL OF EXISTING PILECAPS. DO NOT DAMAGE PANELS AND PILES DURING PILECAP EXTRACTION.
4. PROVIDE NEW BOLTS OR LAGS AT REINSTALLED STRAPS TO MATCH DIAMETER AND LENGTH OF EXISTING BOLTS.

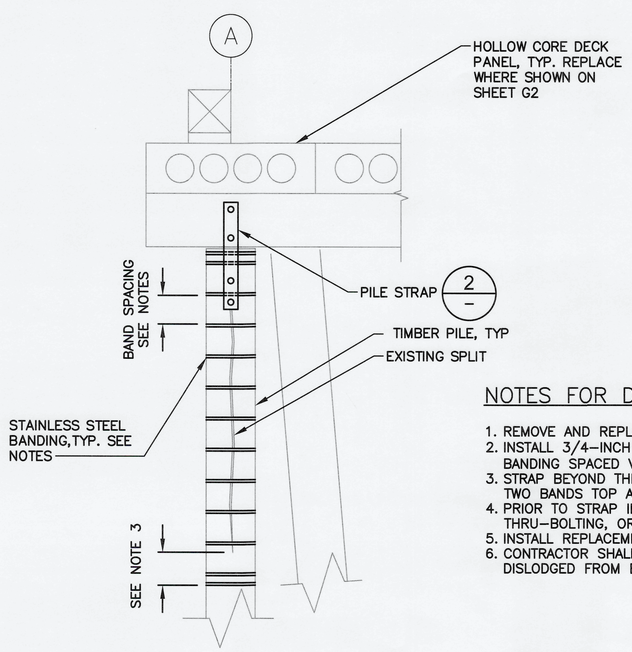

B / G2 **DETAIL**
SCALE: NTS

NOTES FOR DETAIL B:

1. REMOVE AND REPLACE EXISTING PILE STRAP PER DETAIL 2 ON SHEET S2.
2. INSTALL 3/4–INCH WIDE X 0.03–INCH THICK 316 STAINLESS STEEL BANDING SPACED VERTICALLY AT 8–INCHES
3. STRAP BEYOND THE VISIBLE LENGTH OF THE SPLIT BY 12–INCHES. INSTALL TWO BANDS TOP AND BOTTOM OF THE SPLIT.
4. PRIOR TO STRAP INSTALLATION, PULL THE PILE BACK TOGETHER EITHER BY THRU–BOLTING, OR WITH TEMPORARY STRAPPING.
5. INSTALL REPLACEMENT PILE STRAP AFTER INSTALLATION OF BANDING.
6. CONTRACTOR SHALL PROVIDE MEANS OF PREVENTING PILE FROM BECOMING DISLODGED FROM BENEATH PILE CAP

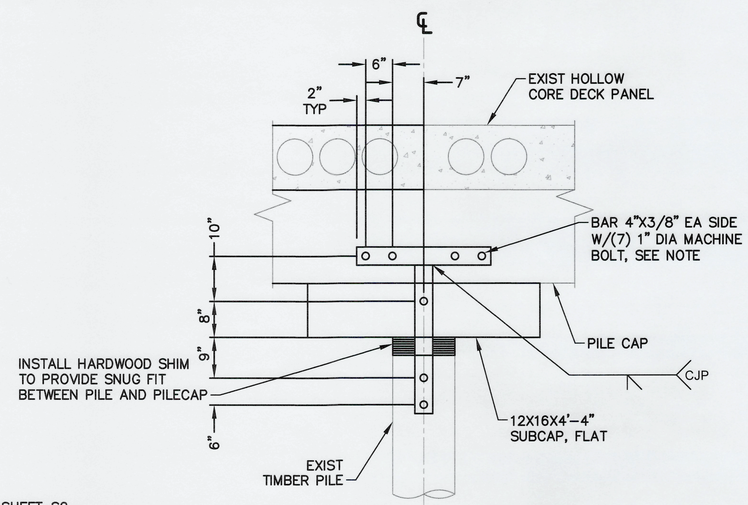

NOTE:
BLOCK &/OR SHIM AS NECESSARY FOR SNUG FIT OF BAR AGAINST PILE, PILECAP, & SUBCAP.

3 / – **DETAIL - PILE CAP AT SPLICE**
SCALE: 3/4" = 1'–0"

2'–0" 0'–0" 1'–0" 2'–0"
SCALE: 3/4"=1'–0"

2'–0" 0'–0" 2'–0" 4'–0"
SCALE: 1/2"=1'–0"

Port of Tacoma
P.O. BOX 1837 TACOMA, WA 98401 (253)383-5841

moffatt & nichol

MARK:	REVISION:	BY:	APPR:	DATE:

10/22/2024

APPROVED:
N. COLSON 4/26/24
CHECKED BY DATE
A. PATTERSON 4/22/24
PROJ. ENGR DATE
DIRECTOR ENG. DATE

PRINTED BY: apatterson Oct 22, 2024
PORT ADDRESS: ONE SITCUM PLAZA
TACOMA, WA 98401–1837

PORT OF TACOMA
PONY LUMBER DOCK REPAIRS
REPAIR SECTIONS & DETAILS (1 OF 2)

TOWNSHIP: | RANGE: | SECTION:
DAT–HRZ: WA83–SF | VERT: MLLW 19.39' @ Tide 22 1933
PARCEL: | DRAWING SCALE: AS NOTED

6687
S2
8 OF 10

CONT/CONS: 071776
M. ID:
PHASE: BID SET

BINDING EDGE

Q:\SEA\10909-09\20 CADD_Active_SheetSet\1090909_4_S2.dwg 10/22/2024 9:55 AM

BINDING EDGE

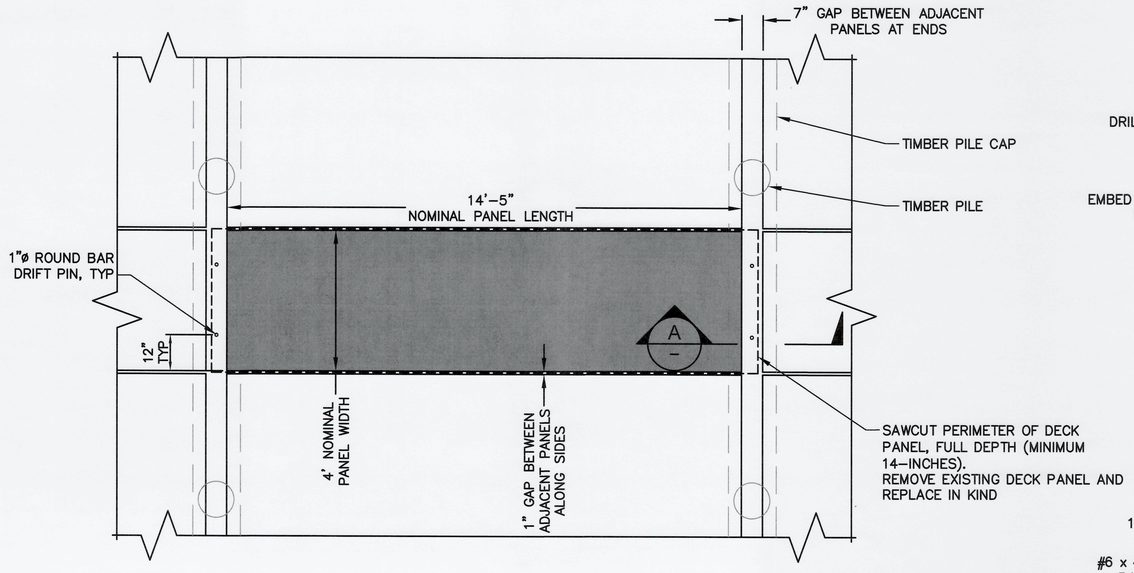

1 / G2 **ENLARGED PLAN - DECK PANELS**
SCALE: 1/2" = 1'-0"

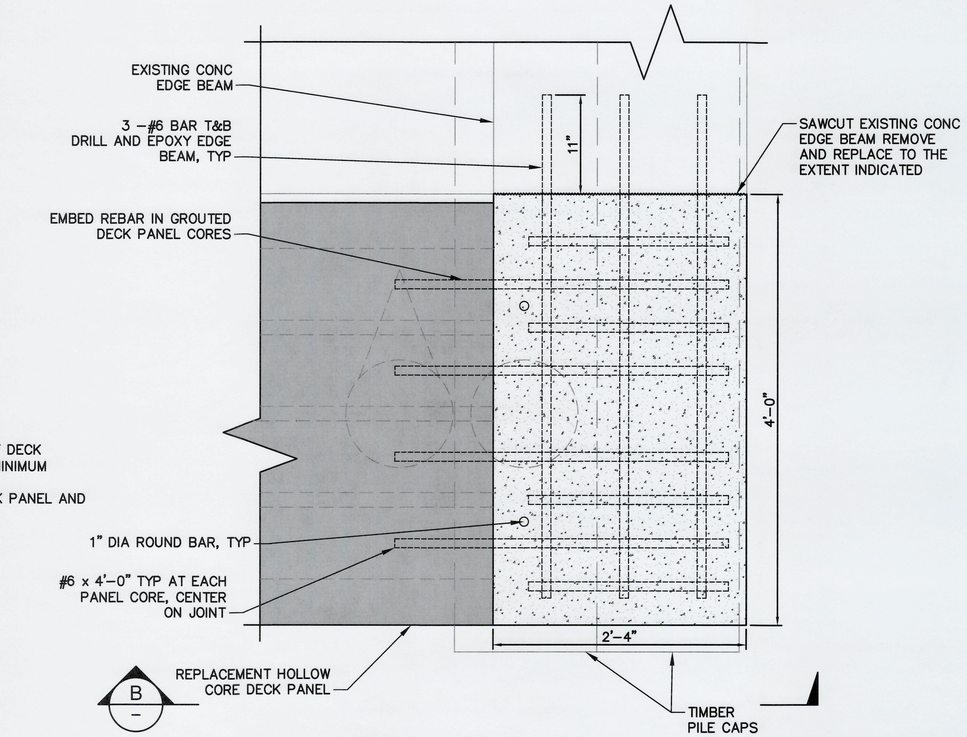

2 / G2 **ENLARGED PLAN - EDGE BEAM REPAIR**
SCALE: 1 1/2" = 1'-0"

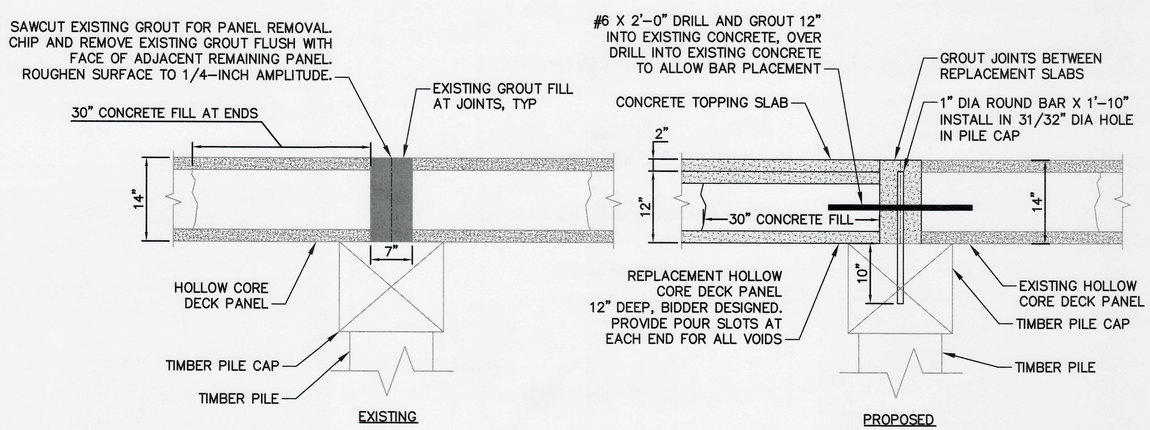

A / – **SECTION AT JOINT**
SCALE: 1" = 1'-0"

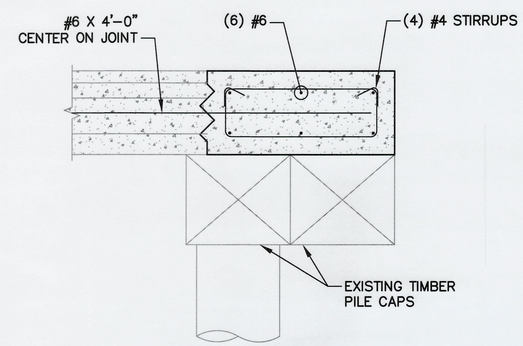

B / – **SECTION - EDGE BEAM REPAIR**
SCALE: 1" = 1'-0"

2'-0" 0'-0" 2'-0" 4'-0"
SCALE: 1/2"=1'-0"

1' 0' 1' 2'
SCALE: 1"=1'

1'-0" 0'-0" 6" 1'-0"
SCALE: 1 1/2"=1'-0"

Port of Tacoma
P.O. BOX 1837 TACOMA, WA 98401 (253)383-5841

moffatt & nichol

MARK:	REVISION:	BY:	APPR:	DATE:

10/22/2024

N. COLSON 4/26/24
CHECKED BY DATE
A. PATTERSON 4/22/24
PROJ. ENGR DATE
APPROVED:
DIRECTOR ENG. DATE

PRINTED BY: apatterson Oct 22, 2024
PORT ADDRESS: ONE SITCUM PLAZA
TACOMA, WA 98401-1837

PORT OF TACOMA
PONY LUMBER DOCK REPAIRS
REPAIR SECTIONS & DETAILS (2 OF 2)

6687
S3
9 OF 10

CONT/CONS: 071776	TOWNSHIP:	RANGE:	SECTION:
M. ID:	DAT-HRZ: WA83-SF	VERT: MLLW 19.39' @ Tide 22 1933	
PHASE: BID SET	PARCEL:	DRAWING SCALE: AS NOTED	

Q:\SEA\10909-09\20 CADD_Active_SheetSet\1090909_5_S3.dwg 10/22/2024 9:55 AM

BINDING EDGE

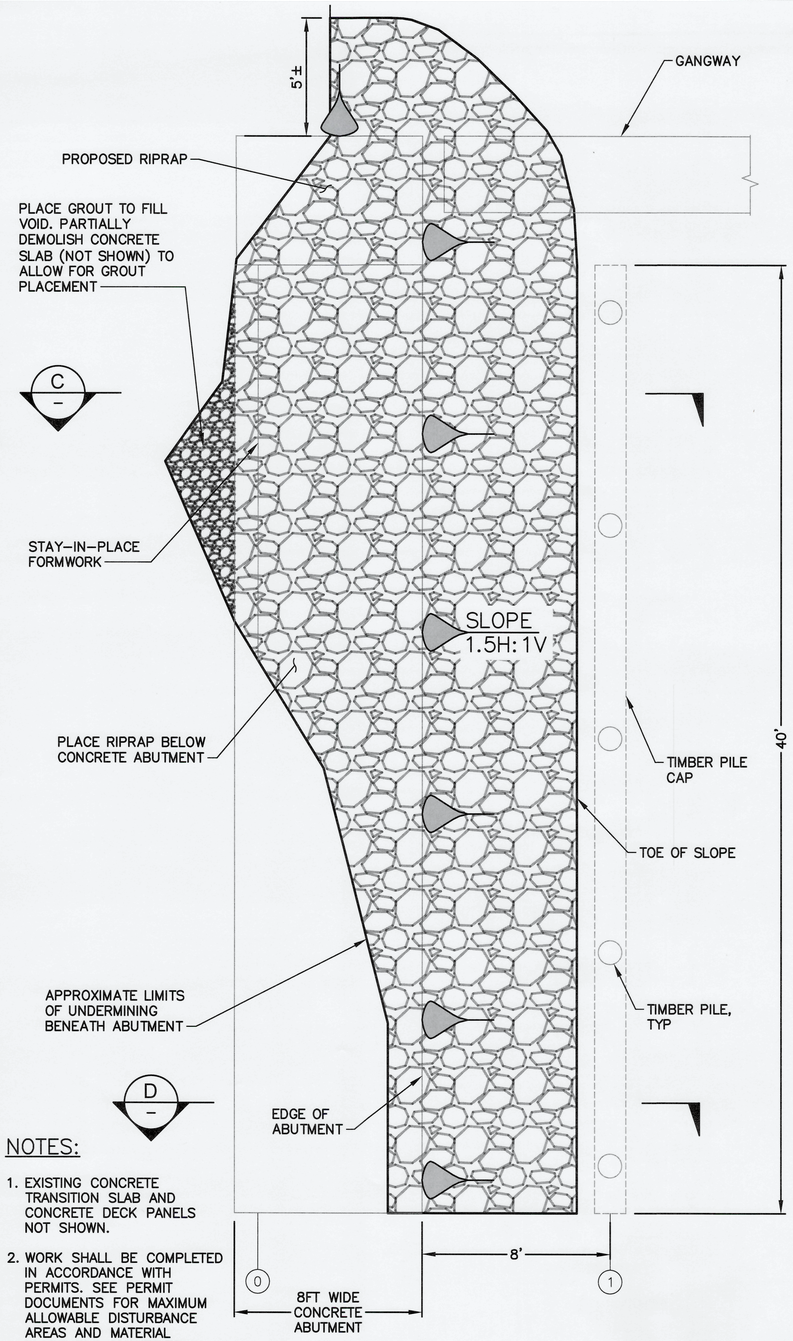

NOTES:

1. EXISTING CONCRETE TRANSITION SLAB AND CONCRETE DECK PANELS NOT SHOWN.
2. WORK SHALL BE COMPLETED IN ACCORDANCE WITH PERMITS. SEE PERMIT DOCUMENTS FOR MAXIMUM ALLOWABLE DISTURBANCE AREAS AND MATERIAL PLACEMENT QUANTITIES.

4 / G2 **ENLARGED PLAN-SHORELINE PROTECTION**
SCALE: NTS

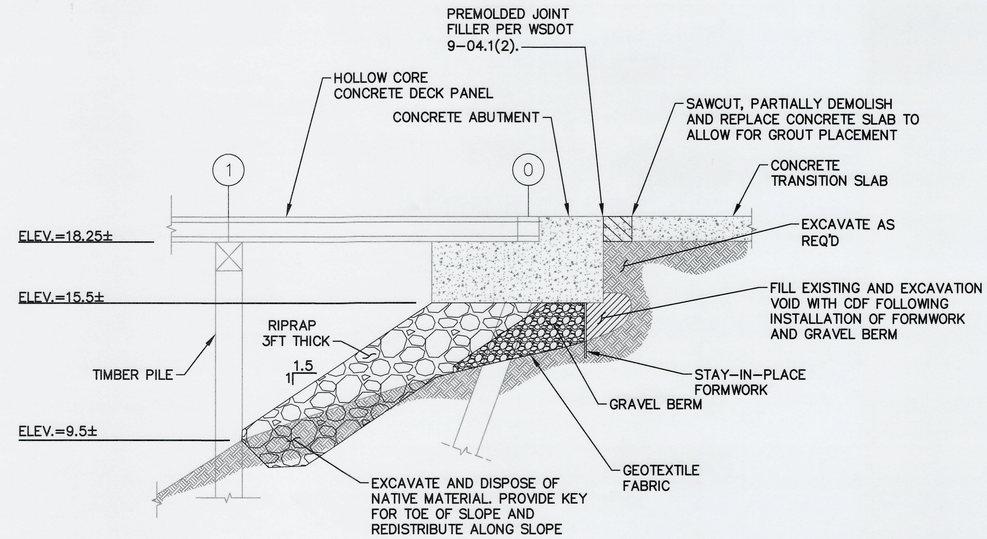

C / – **SECTION - SHORELINE PROTECTION**
SCALE: 1" = 4'-0"

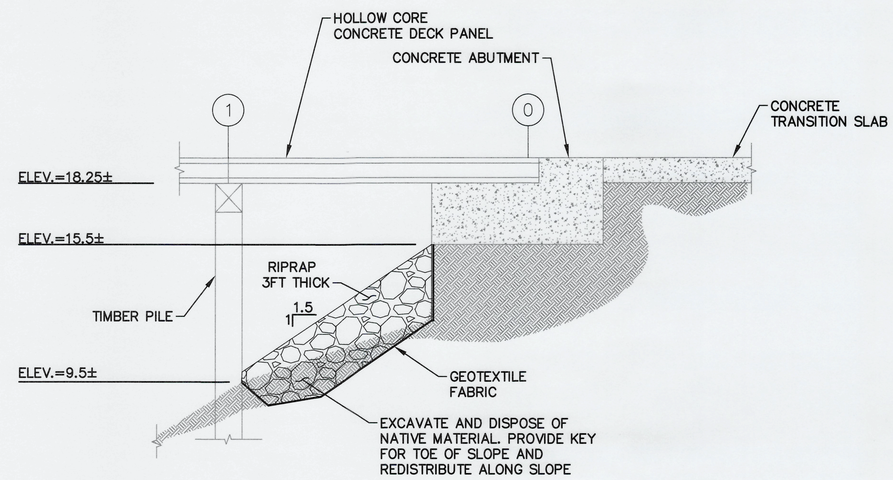

D / – **SECTION - SHORELINE PROTECTION**
SCALE: 1" = 4'-0"

4' 0' 4' 8'
SCALE: 1"=4'

Port of Tacoma
P.O. BOX 1837 TACOMA, WA 98401 (253)383-5841

moffatt & nichol

MARK:	REVISION:	BY:	APPR:	DATE:

10/22/2024

N. COLSON 4/26/24
CHECKED BY DATE
A. PATTERSON 4/22/24
PROJ. ENGR DATE
DIRECTOR ENG. DATE
PRINTED BY: apatterson Oct 22, 2024
PORT ADDRESS: ONE SITCUM PLAZA TACOMA, WA 98401-1837

APPROVED:

PORT OF TACOMA
PONY LUMBER DOCK REPAIRS
SHORELINE PROTECTIONS PLAN & DETAILS

6687
S4
10 OF 10

CONT/CONS: 071776
M. ID:
PHASE: BID SET
TOWNSHIP:
DAT-HRZ: WA83-SF
PARCEL:
RANGE:
VERT: MLLW 19.39' @ Tide 22 1933
DRAWING SCALE: AS NOTED
SECTION:

Q:\SEA\10909-09920 CADD_Active_SheetSet\1090909_4_S4.dwg 10/22/2024 9:55 AM