PORT OF TACOMA

PIER 4 PHASE 1
REMOVAL ACTION PROJECT
PROJECT NO. - 091452
CONTRACT NO. - 069982

PORT COMMISSIONERS:

CONSTANCE T. BACON
DON MEYER
DONALD C. JOHNSON
RICHARD P. MARZANO
CLARE PETRICH

PORT STAFF:

JOHN WOLFE
Chief Executive Officer

DAKOTA CHAMBERLAIN, PE
Director of Facilities Development

THAIS HOWARD, PE
Director of Engineering

TREVOR THORNSLEY, PE
Senior Project Manager

STAN RYTER, PE
Project Manager

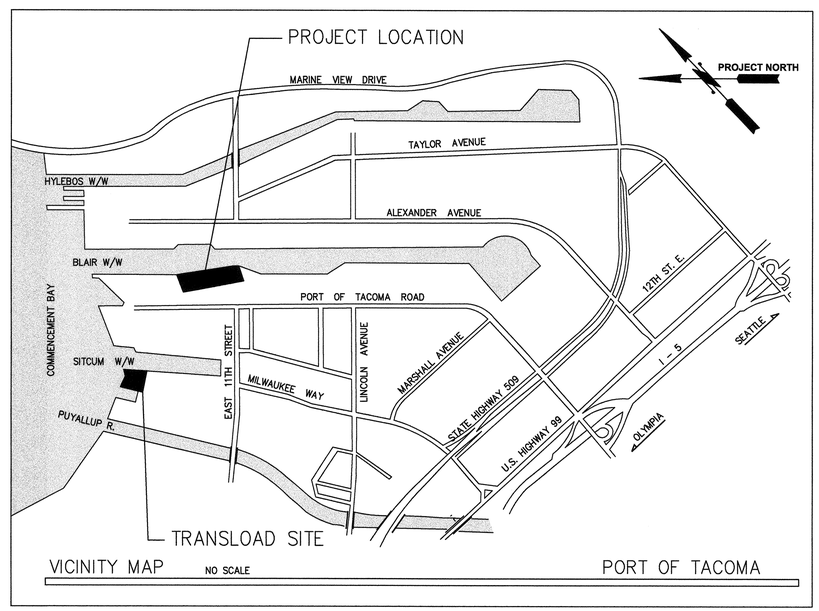

CONSULTANTS:

kpff
2407 North 31st Street, Suite 100
Tacoma, Washington 98407
(253) 396-0150 Fax (253) 396-0162

HARTCROWSER
1700 Westlake Ave North, Suite 200
Seattle, Washington 98109-6212
Tele (206) 324-9530 Fax (206) 328-5581

ELCON ASSOCIATES, INC
ENGINEERS - CONSULTANTS
16300 CHRISTENSEN ROAD, SUITE 330
SEATTLE, WASHINGTON 98188
TEL (206) 243-5022
FAX (206) 243-5205

Port of Tacoma
P.O. BOX 1837 TACOMA, WA 98401 (253)383-5841

kpff
2407 North 31st Street, Suite 100
Tacoma, Washington 98407
(253) 396-0150 Fax (253) 396-0162

MARK:	REVISION:	BY:	APPR:	DATE:

PIER 4 PHASE 1
REMOVAL ACTION PROJECT
COVER SHEET

APPROVED: 2-6-15
DIRECTOR ENG. DATE

SWK 2/6/2015
CHECKED BY DATE

MDK 2/6/2015
PROJ. ENGR DATE

PRINTED BY: enielsen Feb 05, 2015
PORT ADDRESS: ONE SITCUM PLAZA
TACOMA, WA 98401-1837

G1.1
SH 1 OF 54

CONT/CONS: 069982	TOWNSHIP: 21N	RANGE: 3E	SECTION: 27
M. ID: 091452	DAT-HRZ: WA83-SF	VERT: MLLW 19.39' @ Tide 22 1933	
PHASE: BID	PARCEL:	DRAWING SCALE: AS NOTED	

DRAWING LIST

SHEET #	SHEET DESIGNATION	SHEET TITLE
		GENERAL
1	G1.1	COVER SHEET
2	G2.1	DRAWING LIST
3	G3.1	SYMBOLS AND ABBREVIATIONS
4	G3.2	GENERAL NOTES
5	G4.1	SURVEY CONTROL AND NOTES
6	G5.1	OVERALL SITE PLAN
7	G6.1	CONSTRAINTS AND ACCESS PLAN
8	G7.1	EXISTING CONDITIONS PLAN
9	G8.1	TESC GENERAL NOTES
10	G8.2	TESC PLAN - SHEET 1
11	G8.3	TESC PLAN - SHEET 2
12	G8.4	TESC PLAN - SHEET 3
13	G8.5	TESC DETAILS
		DEMOLITION
14	D1.1	UTILITY AND SITE DEMOLITION PLAN - SHEET 1
15	D1.2	UTILITY AND SITE DEMOLITION PLAN - SHEET 2
16	D1.3	UTILITY AND SITE DEMOLITION DETAILS
17	D2.1	PIER DEMOLITION PLAN - SHEET 1
18	D2.2	PIER DEMOLITION PLAN - SHEET 2
19	D3.1	PILE EXTRACTION PLAN - SHEET 1
20	D3.2	PILE EXTRACTION PLAN - SHEET 2
21	D4.1	PIER DEMOLITION SECTIONS - SHEET 1
22	D4.2	PIER DEMOLITION SECTIONS - SHEET 2
		DREDGE
23	C1.1	DREDGE PLAN
24	C1.2	DREDGE SECTIONS - SHEET 1
25	C1.3	DREDGE SECTIONS - SHEET 2
26	C1.4	DREDGE SECTIONS - SHEET 3
27	C1.5	DREDGE SECTIONS - SHEET 4
		TRANSLOAD FACILITY
28	C2.1	TRANSLOAD FACILITY LOCATION PLAN
29	C2.2	TRANSLOAD FACILITY PLAN
		GRADING AND TEMPORARY PAVING
30	C3.1	GRADING AND TEMPORARY PAVING PLAN - SHEET 1
31	C3.2	GRADING AND TEMPORARY PAVING PLAN - SHEET 2
32	C3.3	GRADING AND TEMPORARY PAVING DETAILS
		NAVIGATION LIGHTING
33	C4.1	NAVIGATION LIGHTING PLAN
34	C4.2	TEMPORARY NAVIGATION MARKER DETAILS

DRAWING LIST - CONTINUED

SHEET #	SHEET DESIGNATION	SHEET TITLE
		STRUCTURAL
35	S1.1	TEST PILE LOCATION PLAN
36	S1.2	PRECAST CONCRETE PILE DETAILS
37	S1.3	NAVIGATION LIGHT DETAILS - SHEET 1
38	S1.4	NAVIGATION LIGHT DETAILS - SHEET 2
39	S1.5	STEEL PIPE PILE DETAILS
		ELECTRICAL
40	E1.1	ELECTRICAL SYMBOLS, ABBREVIATIONS AND GENERAL NOTES
41	E2.1	SITE ELECTRICAL DEMOLITION KEY PLAN
42	E2.2	ELECTRICAL DEMOLITION PLAN - SHEET 1
43	E2.3	ELECTRICAL DEMOLITION PLAN - SHEET 2
44	E2.4	ELECTRICAL DEMOLITION PLAN - SHEET 3
45	E2.5	ENLARGED ELECTRICAL DEMOLITION PLAN SUBSTATION #8410
46	E3.1	SITE ELECTRICAL KEY PLAN
47	E3.2	ELECTRICAL PLAN - SHEET 1
48	E3.3	ELECTRICAL PLAN - SHEET 2
49	E3.4	ENLARGED ELECTRICAL PLAN SUBSTATION #8410
50	E4.1	DEMOLITION ONE-LINE DIAGRAM
51	E6.1	CONDUIT AND CONDUCTOR SCHEDULE
52	E6.2	CONDUIT AND CONDUCTOR SCHEDULE
53	E6.3	CONDUIT AND CONDUCTOR SCHEDULE
54	E6.4	CONDUIT AND CONDUCTOR SCHEDULE

Port of Tacoma
P.O. BOX 1837 TACOMA, WA 98401 (253)383-5841

kpff
2407 North 31st Street, Suite 100
Tacoma, Washington 98407
(253) 396-0150 Fax (253) 396-0162

MARK: REVISION: BY: APPR: DATE:

WADE KINGSLEY STATE OF WASHINGTON 32774 REGISTERED PROFESSIONAL ENGINEER

APPROVED: 2-6-15
DIRECTOR ENG. DATE

SWK 2/6/2015
CHECKED BY DATE

MDK 2/6/2015
PROJ. ENGR DATE

PRINTED BY: kvang Feb 03, 2015
PORT ADDRESS: ONE SITCUM PLAZA
TACOMA, WA 98401-1837

PIER 4 PHASE 1
REMOVAL ACTION PROJECT
DRAWING LIST

TOWNSHIP: 21N | RANGE: 3E | SECTION: 27
DAT-HRZ: WA83-SF | VERT: MLLW 19.39' @ Tide 22 1933
DRAWING SCALE: AS NOTED

G2.1
SH 2 OF 54

CONT/CONS: 069982
M. ID: 091452
PHASE: BID
PARCEL:

ABBREVIATIONS

#	NUMBER
ø	DIAMETER
@	AT
AB	AGGREGATE BASE
AC	ASPHALT CONCRETE
ACI	AMERICAN CONCRETE INSTITUTE
ACP	ASBESTOS CONCRETE PIPE OR ASPHALTIC CONCRETE PAVEMENT
ACPA	AMERICAN CONCRETE PIPE ASSOCIATION
ADDL	ADDITIONAL
ADJ	ADJACENT
ADMIN	ADMINISTRATION
AGGR	AGGREGATE
ALT	ALTERNATE
ANSI	AMERICAN NATIONAL STANDARDS INSTITUTE
APP or APPVD	APPROVED
APPROX	APPROXIMATE
APWA	AMERICAN PUBLIC WORKS ASSOCIATION
AREA	AMERICAN RAILWAY ENGINEERING ASSOCIATION
ASTM	AMERICAN SOCIETY FOR TESTING AND MATERIALS
AVG	AVERAGE
AVR	AIR & VACUUM RELEASE VALVE
AWS	AMERICAN WELDING SOCIETY
AWWA	AMERICAN WATER WORKS ASSOCIATION
BLDG	BUILDING
BM	BENCH MARK or BEAM
BMP or BMP'S	BEST MANAGEMENT PRACTICES
BOP	BOTTOM OF PIPE
BOT	BOTTOM
BRG	BEARING
BRZ	BRONZE
BTW or BTWN	BETWEEN
BV	BALL VALVE
C.Y.	CONTAINER YARD OR CUBIC YARD
C/L	CENTERLINE
CAB	CRUSHED AGGREGATE BASE
CB	CATCH BASIN
CC	CENTER TO CENTER
CFS	CUBIC FEET PER SECOND
CIP	CAST IRON PIPE
CL	CENTER LINE or CLASS
CLF	CHAIN LINK FENCE
CLR	CLEAR or CLEARANCE
CMB	CRUSHED MISCELLANEOUS BASE
CMP	CORRUGATED METAL PIPE
CO	CLEAN OUT
COMPR	COMPRESSOR
CONC	CONCRETE
CONST	CONSTRUCT
CONT	CONTINUE or CONTINUOUS
CONTR	CONTRACTOR
COORD	COORDINATE
COUP	COUPLING
CPT	CONE PENETROMETER TEST
CRSI	CONCRETE REINFORCING STEEL INSTITUTE
CSG	CASING
CSP	CORRUGATED STEEL PIPE
CTR	CENTER
CV	CHECK VALVE
DET	DETAIL
DIA	DIAMETER
DIAG	DIAGONAL
DIM	DIMENSION
DIP	DUCTILE IRON PIPE
DWG	DRAWING
DWY	DRIVEWAY
E	EAST or EASTING
EA	EACH
EG	EXISTING GRADE
EL or ELEV	ELEVATION
ELEC or ELECT	ELECTRICAL
ENGR	ENGINEER
EP	EDGE OF PAVEMENT
EQ	EQUAL
ES	ELECTRICAL SUBSTATION
ETC	ET CETERA
EX or EXIST	EXISTING
EXP. JT	EXPANSION JOINT
FF	FINISH FLOOR
FG	FINISH GRADE
FH	PORT FIRE HYDRANT
FIN	FINISH
FL	FLOW LINE
FLGD	FLANGED JOINT
FM	FORCE MAIN
FS	FINISHED SURFACE
FSM	FIRE SERVICE METER
FT	FOOT, FEET
G	GAS
GIS	GEOGRAPHIC INFORMATION SYSTEM
GPS	GLOBAL POSITIONING SYSTEM
GV	GATE VALVE
H or HORIZ	HORIZONTAL
HAZMAT	HAZARDOUS MATERIALS
HCS	HOUSE CONNECTION SEWER
HDPE	HIGH DENSITY POLYETHYLENE
HOWL	HIGHEST OBSERVED WATER LEVEL
HP	HIGH PRESSURE or HIGH POINT
HT	HEIGHT
ID	INSIDE DIAMETER
IN	INCH
INCL	INCLUDE
INFO	INFORMATION
INV	INVERT
IR	INDUSTRIAL REMEDIATION
JB	JUNCTION BOX
JS	JUNCTION STRUCTURE
JT	JOINT
KIP(S)	KILOPOUND(S)
L	LENGTH
LAT	LATERAL
LCB	LANDSIDE CRANE BEAM
LF	LINEAL FOOT
LIN	LINEAL or LINEAR
LOL	LAYOUT LINE
LOWL	LOWEST OBSERVED WATER LEVEL
LP	LOW POINT
LT.	LEFT
LTP	LIGHT POLE
M&R	MAINTENANCE AND REPAIR
M-ARV	MANUAL AIR RELIEF VALVE
MAT	MATERIAL
MAX	MAXIMUM
ME	MATCH EXISTING
MH	MANHOLE
MHHW	MEAN HIGHER HIGH WATER
MHW	MEAN HIGH WATER
MIN	MINIMUM
MISC	MISCELLANEOUS
MJ	MECHANICAL JOINT
MLLW	MEAN LOWER LOW WATER
MLW	MEAN LOW WATER
MNSB	MINIMUM SET BACK
MSL	MEAN SEA LEVEL
MSP	MAUNUAL OF STANDARD PRACTICE
MUTCD	MANUAL OF UNIFORM TRAFFIC CONTROL DEVICES
N	NORTH or NORTHING
NE	NORTH-EAST
NF	NEAR FACE
NIC	NOT IN CONTRACT
No.	NUMBER
NS	NEAR SIDE
NTS	NOT TO SCALE
NW	NORTH-WEST
OC	ON CENTER
OD	OUTSIDE DIAMETER
OVH	OVERHEAD
OHWL	ORDINARY HIGH WATER LINE
P/L or PL	PROPERTY LINE
PB	PULL BOX
PCC	PORTLAND CEMENT CONCRETE
PE	PUSH-ON PLAIN END
PERF	PERFORATED
PERP	PERPENDICULAR
PJ	PUSH-ON JOINT
POT	PORT OF TACOMA
PP	POWER POLE
PR	PRESSURE RATING
PRESS	PRESSURE
PRESS RED	PRESSURE REDUCER
PROP	PROPOSED
PRV	PRESSURE REDUCING VALVE
PRVS	PRESSURE RELIEF VALVE
PSF	POUNDS PER SQUARE FOOT
PSI	POUNDS PER SQUARE INCH
PVC	POLYVINYL CHLORIDE
PVI	POINT OF VERTICAL CURVE
PVMT	PAVEMENT
R	RIDGE or RADIUS
R/W OR ROW	RIGHT OF WAY
RCP	REINFORCED CONCRETE PIPE
RD	ROAD
RED	REDUCER
REF	REFERENCE
REINF	REINFORCE OR REINFORCING
REQ'D	REQUIRED
RP	RADIUS POINT
RR	RAILROAD
RT.	RIGHT
S	SLOPE
S	SOUTH
SCH or SCHED	SCHEDULE
SD	STORM DRAIN
SDMH	STORM DRAIN MANHOLE
SE	SOUTH-EAST
SECT	SECTION
SERV	SERVICE
SHT	SHEET
SIM	SIMILAR
SJ	SLIP JOINT
SPECS	SPECIFICATIONS
SQFT	SQUARE FEET
SS	SANITARY SEWER
SSMH	SANITARY SEWER MANHOLE
STA	STATION
STD	STANDARD
STL	STEEL
SW	SOUTH-WEST
SYM	SYMMETRIC or SYMBOL
T/R or TOR	TOP OF RAIL
TB	THRUST BLOCK
TBM	TEMPORARY BENCH MARK
TESC	TEMPORARY EROSION AND SEDIMENTATION CONTROL
TG	TOP OF GRATE
TOB	TOP OF BANK
TOS	TOE OF SLOPE
TOP	TOP OF PIPE or TOP OF SLOPE
TOR	TOP OF RAIL
TS	TRANSITION STRUCTURE
TW	TOP OF WALL
TYP	TYPICAL
UB	UPLAND BORING
UNO	UNLESS NOTED OTHERWISE
V	VERTICAL
VAC	VACUUM
VAR	VARIABLE or VARIES
VC	VERTICAL CURVE
VCP	VITRIFIED CLAY PIPE
VERT	VERTICAL
W	WATER, WEST, WIDTH
W/	WITH
W/O	WITHOUT
WABO	WASHINGTON ASSOCIATION OF BUILDING ASSOCIATES
WCB	WATERSIDE CRANE BEAM
WELD	WELDING
WHS	WELDED HEADED STUD
WM	WATER METER
WOB	WHARF OFFSHORE BORING
WP	PORT WATER CAP/PLUG
WT	PORT WATER TEE
WWAY	WALKWAY
WWR	WELD WIRE REINFORCEMENT
XS	EXTRA STRONG

Port of Tacoma
P.O. BOX 1837 TACOMA, WA 98401 (253)383-5841

kpff
2407 North 31st Street, Suite 100
Tacoma, Washington 98407
(253) 396-0150 Fax (253) 396-0162

MARK:	REVISION:	BY:	APPR:	DATE:

STATE OF WASHINGTON
WADE LANGLEY
32794
REGISTERED PROFESSIONAL ENGINEER
2/6/15

SWK	CHECKED BY	2/6/2015 DATE
MDK	PROJ. ENGR	2/6/2015 DATE

APPROVED: 2-6-15
DIRECTOR ENG. DATE

PRINTED BY: kvang Feb 03, 2015
PORT ADDRESS: ONE SITCUM PLAZA
TACOMA, WA 98401-1837

PIER 4 PHASE 1
REMOVAL ACTION PROJECT
SYMBOLS AND ABBREVIATIONS

G3.1
SH 3 OF 54

CONT/CONS: 069982	TOWNSHIP: 21N	RANGE: 3E	SECTION: 27
M. ID: 091452	DAT-HRZ: WA83-SF	VERT: MLLW 19.39' @ Tide 22 1933	
PHASE: BID	PARCEL:	DRAWING SCALE: AS NOTED	

SYMBOLS

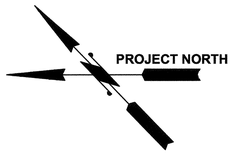

NORTH ARROW

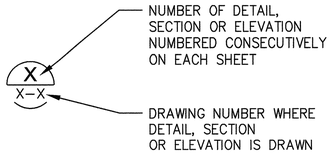

X DETAIL/SECTION
NTS

PLAN
NTS

SCALE IN FEET

SURVEY CONTROL POINT

POT CONTROL POINT

N XXXX
E XXXX
COORDINATES

SYMBOLS - CONTINUED

SD	EXISTING STORM DRAIN
SS SS	EXISTING SANITARY SEWER
BP BP	EXISTING BURIED POWER
T T T	EXISTING TELEPHONE
	EXISTING EDGE OF PAVEMENT
W W	EXISTING EXISTING WATER
	EXISTING TYPE B SHIP BUMPER
	EXISTING TYPE A SHIP BUMPER
	EXISTING CRANE STOP BAR
	EXISTING STOW PIN
	EXISTING SHIP TIE DOWN
	EXISTING ELECTRICAL VAULT
T	EXISTING TELEPHONE VAULT
	EXISTING LIGHT STANDARD
	EXISTING PEDESTRIAN WALK SYMBOL
D	EXISTING STORM DRAIN MANHOLE
S	EXISTING SANITARY SEWER CLEANOUT
	EXISTING BOLLARD
	EXISTING CATCH BASIN
W	EXISTING WATER VALVE
	EXISTING HANDICAP RAMP
CO	EXISTING SANITARY SEWER CLEANOUT
A	EXISTING WHARF ACCESS MANHOLE
W	EXISTING WATER MANHOLE
W	EXISTING WATER METER
POWER VAULT	EXISTING POWER VAULT

GENERAL NOTES:

1. ALL CONSTRUCTION SHALL CONFORM TO THESE PLANS AND SPECIFICATIONS.
2. CONTRACTOR SHALL VERIFY ALL LEVELS, DIMENSIONS, AND EXISTING CONDITIONS IN THE FIELD BEFORE PROCEEDING. CONTRACTOR SHALL NOTIFY THE ENGINEER OF ANY DISCREPANCIES OR FIELD CHANGES PRIOR TO INSTALLATION OR FABRICATION. IN CASE OF DISCREPANCIES BETWEEN THE EXISTING CONDITIONS AND THE DRAWINGS, THE CONTRACTOR SHALL OBTAIN DIRECTION FROM THE ENGINEER BEFORE PROCEEDING. DIMENSIONS AND CALLOUTS NOTED AS PLUS OR MINUS (±) OR (REF) INDICATE UNVERIFIED DIMENSIONS AND ARE APPROXIMATE. NOTIFY THE ENGINEER IMMEDIATELY OF CONFLICTS OR EXCESSIVE VARIATIONS FROM AS INDICATED. NOTED DIMENSIONS TAKE PRECEDENCE OVER SCALED DIMENSIONS – DO NOT SCALE THE DRAWINGS
3. ALL LOCATIONS OF EXISTING UTILITIES SHOWN HEREIN HAVE BEEN OBTAINED FROM AVAILABLE RECORDS AND SHOULD, THEREFORE, BE CONSIDERED APPROXIMATE ONLY AND NOT NECESSARILY COMPLETE. IT IS THE RESPONSIBILITY OF THE CONTRACTOR TO INDEPENDENTLY VERIFY THE ACCURACY OF ALL UTILITY LOCATIONS AND SIZES SHOWN AND TO FURTHER DISCOVER AND AVOID OTHER UTILITIES NOT SHOWN HEREIN WHICH MAY BE AFFECTED BY THE IMPLEMENTATION OF THIS PLAN. THE CONTRACTOR SHALL POTHOLE OR OTHERWISE CONFIRM EXISTING CONDITIONS, AND BRING ANY CONFLICTS BETWEEN EXISTING CONDITIONS AND NEW WORK TO THE ENGINEER'S ATTENTION.
4. THE EXISTING PIER 4 STRUCTURE AND SITE UTILITIES HAVE UNDERGONE NUMEROUS REPAIR AND UPGRADE PROJECTS SINCE THE TIME OF THE ORIGINAL CONSTRUCTION. THESE REPAIRS MAY NOT ALL BE REFLECTED IN THESE CONTRACT DOCUMENTS, REFERENCE DRAWINGS FOR THESE CONTRACTS ARE AVAILABLE FROM THE PORT OF TACOMA.
5. A COPY OF THE PLANS SHALL BE ON–SITE WHENEVER CONSTRUCTION IS IN PROGRESS. THROUGHOUT THE PROGRESS OF THE WORK OF THIS CONTRACT, MAINTAIN AN ACCURATE RECORD OF ALL CHANGES IN THE CONTRACT DOCUMENTS. UPON THE COMPLETION OF THIS CONTRACT, PROVIDE ONE COMPLETE SET OF RECORD DOCUMENTS TO THE PORT OF TACOMA.
6. THE CONTRACTOR SHALL LOCATE ALL UTILITIES WITHIN THE PROJECT SITE PRIOR TO WORK. CONTRACTOR SHALL CONTACT 811 "CALL BEFORE YOU DIG" TO LOCATE ALL UTILITIES AT LEAST 48 HOURS PRIOR TO WORK.
7. THE CONTRACTOR SHALL FIELD VERIFY ALL DIMENSIONS OF EXISTING STRUCTURES AND OTHER FEATURES THAT MAY IMPACT THE WORK. CONTRACTOR SHALL BRING ANY CONFLICTS TO THE ENGINEER'S ATTENTION PRIOR TO BEGINNING AFFECTED WORK.
8. ANY DAMAGE TO EXISTING UTILITIES, OTHER FACILITIES OR EQUIPMENT DUE TO THE CONTRACTOR'S NEGLIGENCE SHALL BE PROMPTLY REPAIRED BY THE CONTRACTOR AT HIS EXPENSE. THIS INCLUDES ITEMS OUTSIDE THE WORK AREA AND WITHIN THE PORT OF TACOMA PROPERTY THAT ARE DAMAGED BY CONSTRUCTION ACTIVITIES DURING EXECUTION OF THIS CONTRACT. (EXCEPT FOR ITEMS DESIGNATED FOR DEMOLITION)
9. ALL ACTIVATION AND DEACTIVATION OF UTILITIES SHALL BE COORDINATED WITH THE ENGINEER IN ADVANCE. PROVIDE A MINIMUM OF 3 DAYS ADVANCE WRITTEN NOTICE TO THE ENGINEER.
10. THE CONTRACTOR SHALL KEEP ALL STREETS AND VEHICULAR TRAFFIC AREAS USED FOR THIS WORK CLEAN AT ALL TIMES, SEE SPECIFICATIONS FOR ADDITIONAL REQUIREMENTS.
11. CONTRACTOR IS RESPONSIBLE FOR ANY TRAFFIC CONTROLS REQUIRED DURING THE DURATION OF THIS PROJECT. ALL TRAFFIC CONTROL SHALL BE IN ACCORDANCE WITH THE MANUAL OF UNIFORM TRAFFIC CONTROL DEVICES.
12. MAINTAIN UTILITY SERVICE TO EXISTING BUILDINGS, PIER 3 AND FIRE HYDRANTS DURING CONSTRUCTION UNLESS NOTED OTHERWISE OR APPROVED BY THE ENGINEER.

Port of Tacoma
P.O. BOX 1837 TACOMA, WA 98401 (253)383-5841

kpff
2407 North 31st Street, Suite 100
Tacoma, Washington 98407
(253) 396-0150 Fax (253) 396-0162

MARK:	REVISION:	BY:	APPR:	DATE:

STATE OF WASHINGTON
MARK D. NGUYEN
36425
REGISTERED PROFESSIONAL ENGINEER

APPROVED: 2-4-15
DIRECTOR ENG. DATE

SMK 2/6/2015
CHECKED BY DATE

MDK 2/6/2015
PROJ. ENGR DATE

PRINTED BY: kvang Feb 03, 2015
PORT ADDRESS: ONE SITCUM PLAZA TACOMA, WA 98401–1837

PIER 4 PHASE 1
REMOVAL ACTION PROJECT
GENERAL NOTES

G3.2
SH 4 OF 54

CONT/CONS: 069982	TOWNSHIP: 21N	RANGE: 3E	SECTION: 27
M. ID: 091452	DAT–HRZ: WA83–SF	VERT: MLLW 19.39' @ Tide 22 1933	
PHASE: BID	PARCEL:	DRAWING SCALE: AS NOTED	

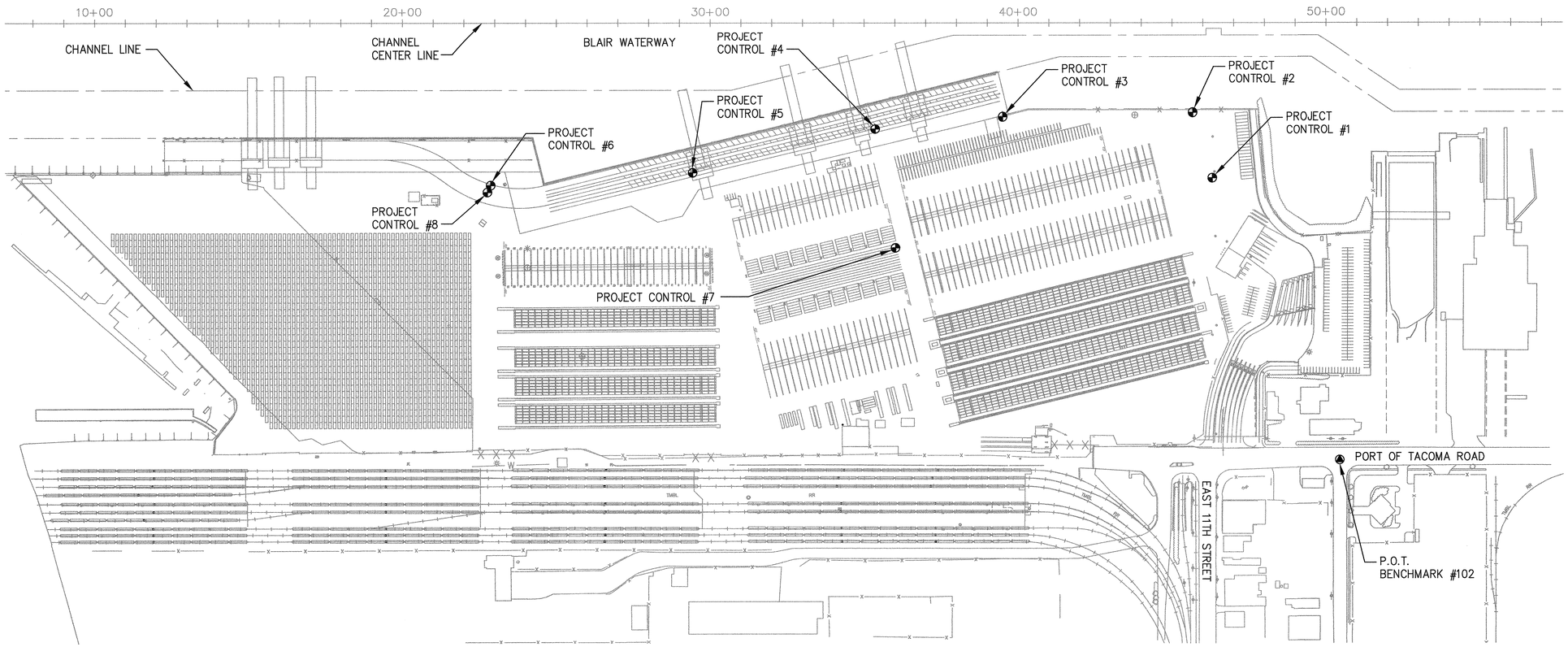

SURVEY CONTROL PLAN

SCALE: 1"=200'

RELATIONSHIP BETWEEN VERTICAL DATUMS:

NAVD 88 = 3.50
MLLW = 6.17
NGVD 29 = 0.0

3.50'

NAVD 88 = 0.0
MLLW = 2.67
NGVD 29 = −3.50

2.67'

NAVD 88 = −2.67
MLLW = 0.00
NGVD 29 = −6.17

PORT OF TACOMA VERTICAL DATUM (1960–1978 EPOCH)

SURVEY AND DATUM INFORMATION:

1. BATHYMETRIC SURVEY BY SOLMAR HYDRO AND SITTS + HILL ENGINEERS INC. DATED JULY, 2013.
2. UPLAND SURVEY BY KPFF CONSULTING ENGINEERS DATED JANUARY 2013.
3. DATUM INFORMATION:
   HORIZONTAL DATUM: WASHINGTON STATE PLANE COORDINATE SYSTEM, SOUTH ZONE, NAD 83/07.

   VERTICAL DATUM: TIDAL DATUM MLLW = 0.00'
4. UPLAND SURVEY TIES TO PORT OF TACOMA SURVEY CONTROL AS SHOWN ON PORT OF TACOMA 2007 SURVEY CONTROL MAP TITLED "BLAIR–HYLEBOS PENINSULA CONTROL MAP." PREPARED BY PARAMETRIX DATED JANUARY 7, 2008.

SURVEY CONTROL POINTS

PT#	NORTHING	EASTING	ELEV.	DESCRIPTION
102	711167.81	1167410.52	17.62	POT CONTROL POINT MNSB – 10' SW OF CL PORT OF TACOMA
106	709098.54	1169548.72	17.01	POT CONTROL POINT MNSB – INTERSECTION OF PORT OF TACOMA
1	712109.00	1167747.77	18.04	MAG NAIL
2	712306.49	1167850.98	17.34	MAG NAIL
3	712726.22	1167398.64	18.24	MAG NAIL
4	712986.28	1167074.44	17.11	MAG NAIL
5	713295.71	1166548.06	17.07	MAG NAIL
6	713723.48	1166048.58	16.73	MAG NAIL
7	712662.85	1166852.22	16.17	MAG NAIL
8	713714.79	1166025.29	16.47	MAG NAIL

TIDAL INFORMATION:

1. TIDAL INFORMATION OBTAINED FROM NOAA WEBSITE FOR STATION 9446484 FOR THE 1983–2001 EPOCH.

   HOWL = 14.56'
   MHHW = 11.80'
   MHW = 10.92'
   MSL = 6.86'
   MLW = 2.85'
   MLLW = 0.0'
   LOWL = −4.70'
2. PROJECT SPECIFIC ORDINARY HIGH WATER MARK (OHWM) EL = 12.78', AS IDENTIFIED BY WASHINGTON DEPARTMENT OF FISH AND WILDLIFE (WDFW).

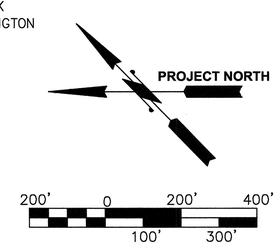

SCALE: 1"=200'

Port of Tacoma
P.O. BOX 1837 TACOMA, WA 98401 (253)383-5841

kpff
2407 North 31st Street, Suite 100
Tacoma, Washington 98407
(253) 396-0150 Fax (253) 396-0162

MARK:	REVISION:	BY:	APPR:	DATE:

STATE OF WASHINGTON
MARK D. KNICHOLOPY
32216
REGISTERED PROFESSIONAL ENGINEER

APPROVED: 2-6-15
DIRECTOR ENG. DATE

SWK 2/6/2015
CHECKED BY DATE
MDK 2/6/2015
PROJ. ENGR DATE
PRINTED BY: kvang Feb 03, 2015
PORT ADDRESS: ONE SITCUM PLAZA
TACOMA, WA 98401–1837

PIER 4 PHASE 1
REMOVAL ACTION PROJECT
SURVEY CONTROL AND NOTES

G4.1
SH 5 OF 54

CONT/CONS: 069982	TOWNSHIP: 21N	RANGE: 3E	SECTION: 27
M. ID: 091452	DAT–HRZ: WA83–SF	VERT: MLLW 19.39' @ Tide 22 1933	
PHASE: BID	PARCEL:	DRAWING SCALE: AS NOTED	

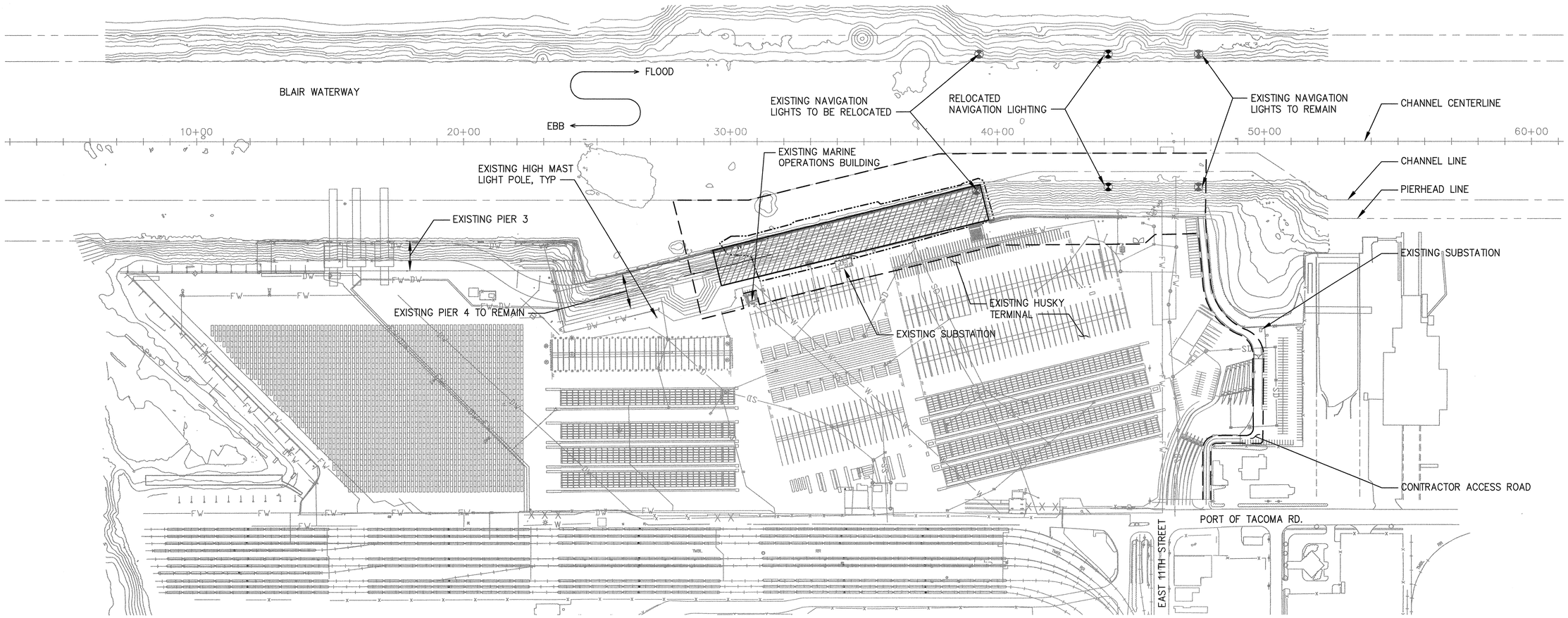

OVERALL SITE PLAN

SCALE: 1"=200'

NOTES

1. THIS PLAN PROVIDES AN OVERVIEW OF THE PROJECT ELEMENTS AND DOES NOT COMPLETELY DESCRIBE THE PROJECT. SEE COMPLETE CONTRACT DOCUMENTS FOR ALL CONTRACT AND PROJECT REQUIREMENTS.

LEGEND

- PROJECT WORK AREA LIMITS
- LIMITS OF DREDGING
- EXISTING PIER 4 DEMOLITION

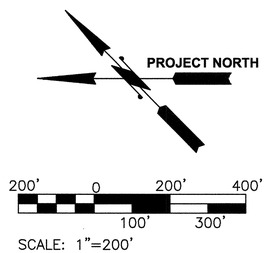

SCALE: 1"=200'

Port of Tacoma
P.O. BOX 1837 TACOMA, WA 98401 (253)383-5841

kpff
2407 North 31st Street, Suite 100
Tacoma, Washington 98407
(253) 396-0150 Fax (253) 396-0162

MARK:	REVISION:	BY:	APPR:	DATE:

SWK 2/6/2015 CHECKED BY DATE
MDK 2/6/2015 PROJ. ENGR DATE
PRINTED BY: kvang Feb 03, 2015
PORT ADDRESS: ONE SITCUM PLAZA TACOMA, WA 98401-1837

APPROVED: 2-6-15
DIRECTOR ENG. DATE

PIER 4 PHASE 1
REMOVAL ACTION PROJECT
OVERALL SITE PLAN

G5.1
SH 6 OF 54

CONT/CONS: 069982	TOWNSHIP: 21N	RANGE: 3E	SECTION: 27
M. ID: 091452	DAT-HRZ: WA83-SF	VERT: MLLW 19.39' @ Tide 22 1933	
PHASE: BID	PARCEL:	DRAWING SCALE: AS NOTED	

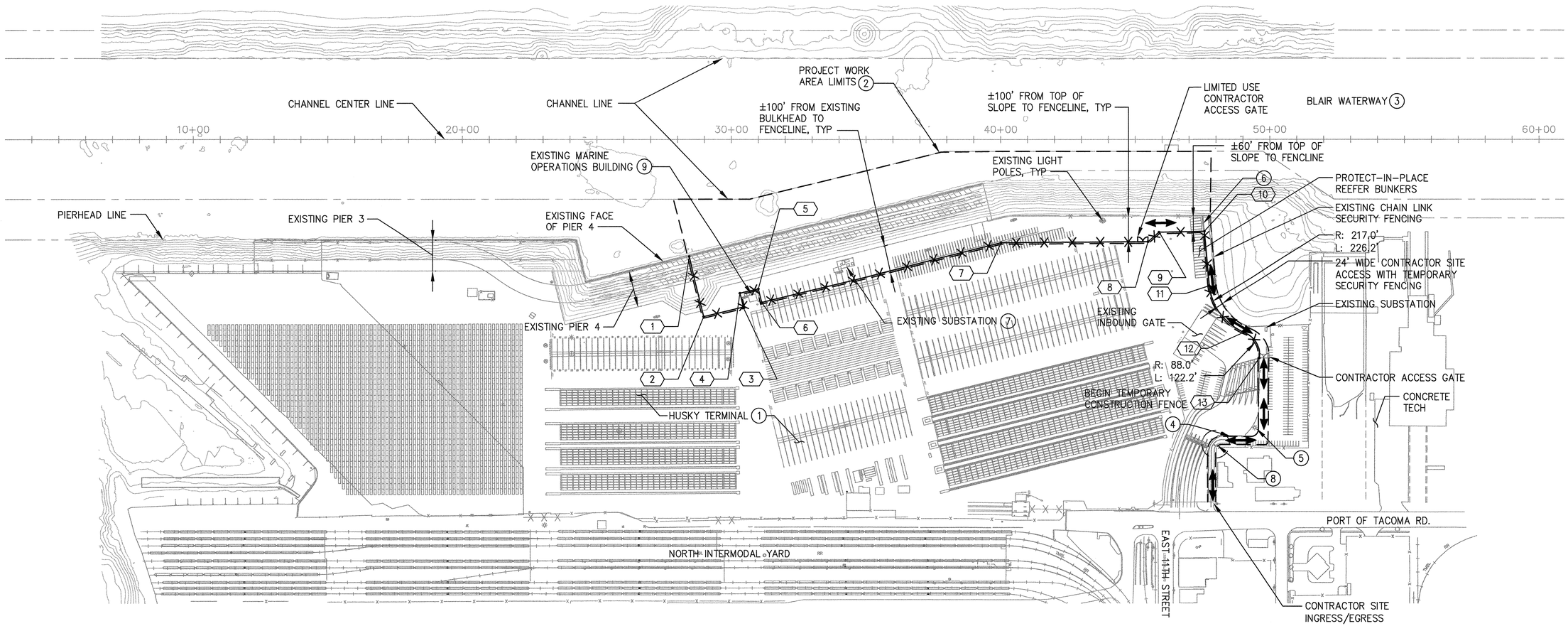

CONSTRAINTS AND ACCESS PLAN

SCALE: 1"=200'

LEGEND

- PROJECT WORK AREA LIMITS
- TEMPORARY CONSTRUCTION FENCE AND ECOLOGY BLOCKS, SEE 3 / G8.5
- CONTRACTOR ACCESS ROUTE

KEY NOTES

1. HUSKY TERMINAL IS A RESTRICTED OPERATING TERMINAL. THE CONTRACTOR SHALL NOT INTERFERE WITH THE TERMINAL OPERATIONS.
2. CONTRACTOR SHALL STOCKPILE AND STAGE ALL EQUIPMENT, SUPPLIES AND MATERIALS WITHIN THE PROJECT WORK AREA LIMITS UNLESS NOTED OTHERWISE. WHEN CONTRACT WORK IS COMPLETE CONTRACTOR SHALL CLEAR AND CLEAN THE WORK AREA.
3. THE BLAIR WATERWAY IS AN ACTIVE SHIPPING CHANNEL THE CONTRACTOR SHALL NOT OBSTRUCT SHIPPING OPERATIONS TO AND FROM THE HUSKY TERMINAL, ANY OTHER TERMINAL, OR ANY OTHER VESSEL TRAFFIC IN THE WATERWAY.
4. CONTRACTOR SHALL PROTECT-IN-PLACE EXISTING CONCRETE BARRIERS AND NOT IMPACT INCOMING TRUCK TRAFFIC.
5. CONTRACTOR SHALL PROTECT-IN-PLACE EXISTING HIGH MAST LIGHT POLE, ROUTE CONSTRUCTION TRAFFIC SOUTH OF POLE AND NOT IMPACT INCOMING TERMINAL TRUCK TRAFFIC OR GATE OPERATION.
6. CONTRACTOR SHALL DEMOLISH EASTERN MOST REEFER BUNKER ONLY AS REQUIRED FOR CONSTRUCTION TRAFFIC TURNING MOVEMENTS, SEE ELECTRICAL DEMOLITION PLANS.
7. THE EXISTING ELECTRICAL SUBSTATION SHALL REMAIN IN OPERATION DURING CONSTRUCTION. CONTRACTOR SHALL PROTECT THE SUBSTATION AND ALLOW ACCESS BY PORT MAINTENANCE AND OPERATIONS PERSONNEL.
8. CONTRACTOR TO RELOCATE JERSEY BARRIER TO ACCOMODATE TRUCK TURNING. ENGINEER TO CONFIRM RELOCATION PRIOR TO WORK.
9. CONTRACTOR SHALL PROTECT IN PLACE THE EXISTING MARINE OPERATIONS BUILDING, ALL ASSOCIATED EQUIPMENT AND UTILITY LINES, SEE DEMOLITION PLAN E2.4.

NOTES

1. SEE TRANSLOAD FACILITY PLANS FOR ADDITIONAL CONSTRAINTS AND ACCESS DETAILS.
2. ECOLOGY BLOCKS SHALL BE PLACED INSIDE TEMPORARY CONSTRUCTION FENCE WITHIN THE PROJECT WORK AREA LIMITS. THE TEMPORARY CONSTRUCTION FENCE COORDINATES LISTED IN TABLE 1 REPRESENT THE CENTERLINE OF THE TEMPORARY CONSTRUCTION FENCE.

TABLE 1: TEMPORARY CONSTRUCTION FENCE COORDINATES (SEE NOTE 2)

#	NORTHING	EASTING
1	713403.72	1166514.37
2	713208.01	1166399.07
3	713131.23	1166529.52
4	713176.58	1166556.24
5	713140.69	1166617.16
6	713095.56	1166590.57
7	712633.63	1167381.52
8	712256.63	1167776.19
9	712253.43	1167829.88
10	712138.22	1167952.99
11	711983.44	1167828.29
12	711769.40	1167798.32
13	711659.55	1167773.56

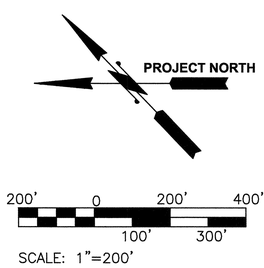

SCALE: 1"=200'

Port of Tacoma
P.O. BOX 1837 TACOMA, WA 98401 (253)383-5841
kpff
2407 North 31st Street, Suite 100
Tacoma, Washington 98407
(253) 396-0150 Fax (253) 396-0162

MARK:	REVISION:	BY:	APPR:	DATE:

STATE OF WASHINGTON 22776 REGISTERED PROFESSIONAL ENGINEER

SWK	2/6/2015
CHECKED BY	DATE
MDK	2/6/2015
PROJ. ENGR	DATE
APPROVED:	
2-6-15	
DIRECTOR ENG.	DATE

PIER 4 PHASE 1
REMOVAL ACTION PROJECT
CONSTRAINTS AND ACCESS PLAN

G6.1
SH 7 OF 54

CONT/CONS: 069982	TOWNSHIP: 21N	RANGE: 3E	SECTION: 27
M. ID: 091452	DAT-HRZ: WA83-SF	VERT: MLLW 19.39' @ Tide 22 1933	
PHASE: BID	PARCEL:	DRAWING SCALE: AS NOTED	

PRINTED BY: sstainer Feb 05, 2015
PORT ADDRESS: ONE SITCUM PLAZA TACOMA, WA 98401-1837

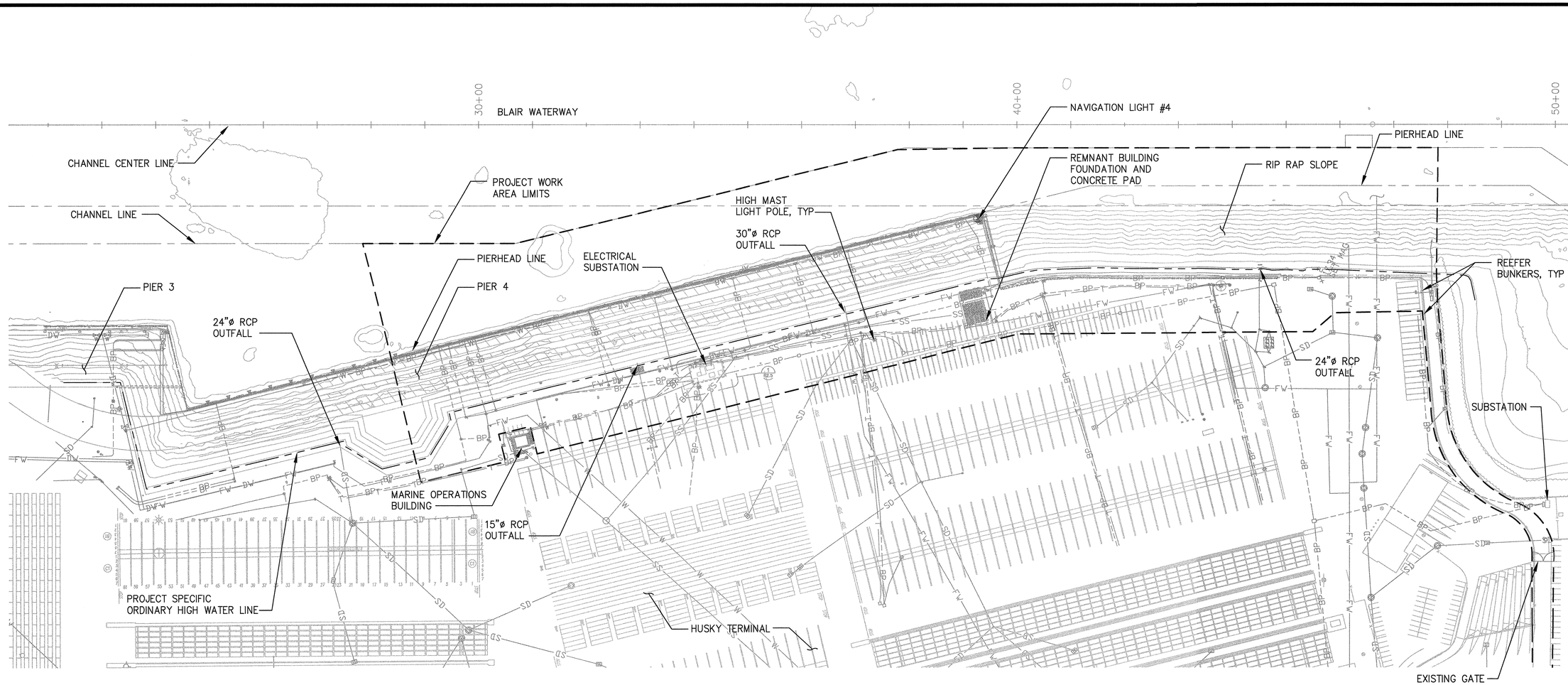

LEGEND

- - - - - PROJECT WORK AREA LIMITS

—·—·— PROJECT SPECIFIC ORDINARY HIGH WATER LINE

EXISTING CONDITIONS PLAN

SCALE: 1"=100'

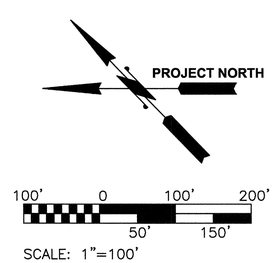

Port of Tacoma
P.O. BOX 1837 TACOMA, WA 98401 (253)383-5841

kpff
2407 North 31st Street, Suite 100
Tacoma, Washington 98407
(253) 396-0150 Fax (253) 396-0162

MARK:	REVISION:	BY:	APPR:	DATE:

STATE OF WASHINGTON
DAVID KINGSLEY
38278
REGISTERED PROFESSIONAL ENGINEER

SWK	CHECKED BY	2/6/2015 DATE
MDK	PROJ. ENGR	2/6/2015 DATE
PRINTED BY: sstainer Feb 05, 2015		
PORT ADDRESS:ONE SITCUM PLAZA		
TACOMA, WA 98401-1837		

APPROVED: 2-6-15
DIRECTOR ENG. DATE

PIER 4 PHASE 1
REMOVAL ACTION PROJECT
EXISTING CONDITIONS PLAN

G7.1
SH 8 OF 54

CONT/CONS: 069982	TOWNSHIP: 21N	RANGE: 3E	SECTION: 27
M. ID: 091452	DAT-HRZ: WA83-SF	VERT: MLLW 19.39' @ Tide 22 1933	
PHASE: BID	PARCEL:	DRAWING SCALE: AS NOTED	

TESC NOTES:

1. APPROVAL OF THIS TEMPORARY EROSION CONTROL (TESC) PLAN DOES NOT CONSTITUTE AN APPROVAL OF DRAINAGE DESIGN (E.G. SIZE AND LOCATION OF PIPES, STRUCTURES, ETC.) OR THE CONTRACTOR MAINTAINED CONSTRUCTION STORM WATER POLLUTION PREVENTION PLAN (SWPPP).
2. THE CONTRACTOR SHALL COMPLY WITH, MAINTAIN, AND MODIFY AS NEEDED THE APPROVED CONSTRUCTION SWPPP IN ACCORDANCE WITH THE CONTRACT DOCUMENTS.
3. THE IMPLEMENTATION OF THESE TESC PLANS AND CONSTRUCTION, MAINTENANCE, REPLACEMENT AND UPGRADING OF THESE FACILITIES IS THE RESPONSIBILITY OF THE CONTRACTOR UNTIL ALL CONSTRUCTION IS COMPLETED AND APPROVED.
4. THE TESC FACILITIES SHOWN ON THIS PLAN ARE THE MINIMUM REQUIREMENTS ANTICIPATED FOR SITE CONDITIONS. DURING THE CONSTRUCTION PERIOD, THESE TESC FACILITIES SHALL BE UPGRADED AS NEEDED FOR UNEXPECTED STORM EVENTS AND TO ENSURE THAT SEDIMENT AND SEDIMENT–LADEN WATER DOES NOT LEAVE THE SITE.
5. ON–SITE EROSION CONTROL MEASURES SHALL BE INSTALLED PRIOR TO THE START OF WORK AND SHALL BE MAINTAINED DURING AND AFTER EXCAVATION AND GRADING OPERATIONS TO THE APPROVAL OF THE PORT.
6. IF CONSTRUCTION OCCURS DURING DRY WEATHER PERIODS, DUST FROM CONSTRUCTION SHALL BE MINIMIZED THROUGH USE OF BEST MANAGEMENT PRACTICES (BMPS) OUTLINED IN THE SWPPP AND THE CITY'S STORMWATER MANUAL.
7. THE TESC FACILITIES SHOWN ON THIS PLAN SHALL BE CONSTRUCTED IN SUCH A MANNER AS TO ENSURE THAT SEDIMENT–LADEN WATER DOES NOT ENTER THE PORT DRAINAGE SYSTEM, THE BLAIR WATERWAY, OR VIOLATE APPLICABLE WATER QUALITY STANDARDS
8. THE TESC FACILITIES SHALL BE INSPECTED DAILY BY THE CONTRACTOR AND MAINTAINED AS NECESSARY TO ENSURE THEIR CONTINUED FUNCTION. DAILY INSPECTION REPORTS MUST BE REVIEWED BY THE CONTRACTOR, SIGNED AND MADE AVAILABLE TO THE PORT, CITY AND ANY OTHER ENVIRONMENTAL AUTHORITIES AT ALL TIMES. A COPY OF ALL INSPECTION RECORDS SHALL BE KEPT ON SITE.
9. ALL FACILITIES SHALL BE MAINTAINED ON SITE BY SWEEPING TO PREVENT DEBRIS, DUST AND MUD FROM ACCUMULATING ON THE PAVED SURFACES, BANK SLOPE, OR IN THE BLAIR WATERWAY, SITCUM WATERWAY, AND COMMENCEMENT BAY.
10. NON–COMPLIANCE WITH THE EROSION CONTROL AND WATER QUALITY REQUIREMENTS MAY RESULT IN A TEMPORARY STOP–WORK ORDER AT THE CONTRACTORS EXPENSE, UNTIL SAID EROSION CONTROL MEASURES ARE FUNCTIONAL.
11. THE CONTRACTOR SHALL REMOVE MATERIAL DROPPED, WASHED OR TRACKED FROM VEHICLES OUTSIDE OF THE DESIGNATED PROJECT WORK AREA LIMITS OR INTO THE EXISTING STORM DRAINAGE SYSTEM. DEBRIS SHALL NOT BE WASHED INTO THE STORM DRAINAGE SYSTEM, ONTO THE BANK SLOPE, OR INTO THE BLAIR WATERWAY, SITCUM WATERWAY, AND COMMENCEMENT BAY.
12. DEWATERING ACTIVITIES SHALL BE PERFORMED IN A MANNER THAT ENSURES NO SILT–LADEN WATER ENTERS THE BLAIR WATERWAY, SITCUM WATERWAY, COMMENCEMENT BAY, OR STORM DRAINAGE SYSTEM.
13. ALL CATCH BASIN INLET PROTECTION INSTALLED SHALL BE REPLACED AND LEFT IN PLACE AT THE END OF CONSTRUCTION, AFTER FINAL INSPECTION AND ACCEPTANCE.
14. REMOVE SEDIMENT FROM THE STORM SYSTEM ONCE THE SITE IS PERMANENTLY STABILIZED. THE CLEANING AND REMOVAL OPERATION SHALL NOT FLUSH SEDIMENT DOWNSTREAM.
15. COORDINATE TESC PROVISION THAT ARE OUTSIDE OF THE PROJECT WORK AREA WITH THE ENGINEER AND PORT.
16. THE CONTRACTOR SHALL REMOVE MATERIAL AND/OR DEBRIS FROM VEHICLES EXITING THE PROJECT LIMITS, BUT NOT WASH THE DEBRIS INTO THE EXISTING STORM DRAINAGE SYSTEM.
17. IN ADDITION TO INLET PROTECTION SHOWN ON PLAN, CONTRACTOR SHALL INSTALL AND MAINTAIN INLET PROTECTION ON ALL EXISTING CATCH BASINS THAT ARE DISCOVERED IN FIELD WITHIN THE PROJECT WORK AREA LIMITS.
18. THE TEMPORARY FLOATING DEBRIS BOOM SHALL BE INSTALLED AT THE START OF WORK AND MAINTAINED, UPGRADED, REPAIRED OR REPLACED THE ENTIRE CONSTRUCTION PERIOD UNTIL ALL CONSTRUCTION IS COMPLETED AND APPROVED.

Port of Tacoma
P.O. BOX 1837 TACOMA, WA 98401 (253)383-5841

kpff
2407 North 31st Street, Suite 100
Tacoma, Washington 98407
(253) 396-0150 Fax (253) 396-0162

MARK:	REVISION:	BY:	APPR:	DATE:

STEVEN WADE KINGSLEY
STATE OF WASHINGTON
32724
REGISTERED PROFESSIONAL ENGINEER

SWK 2/6/2015
CHECKED BY DATE

MDK 2/6/2015
PROJ. ENGR DATE

APPROVED: 2-6-15
DIRECTOR ENG. DATE

PRINTED BY: kvang Feb 03, 2015
PORT ADDRESS: ONE SITCUM PLAZA
TACOMA, WA 98401–1837

PIER 4 PHASE 1
REMOVAL ACTION PROJECT
TESC GENERAL NOTES

G8.1
SH 9 OF 54

CONT/CONS: 069982	TOWNSHIP: 21N	RANGE: 3E	SECTION: 27
M. ID: 091452	DAT–HRZ: WA83–SF	VERT: MLLW 19.39' @ Tide 22.1933	
PHASE: BID	PARCEL:	DRAWING SCALE: AS NOTED	

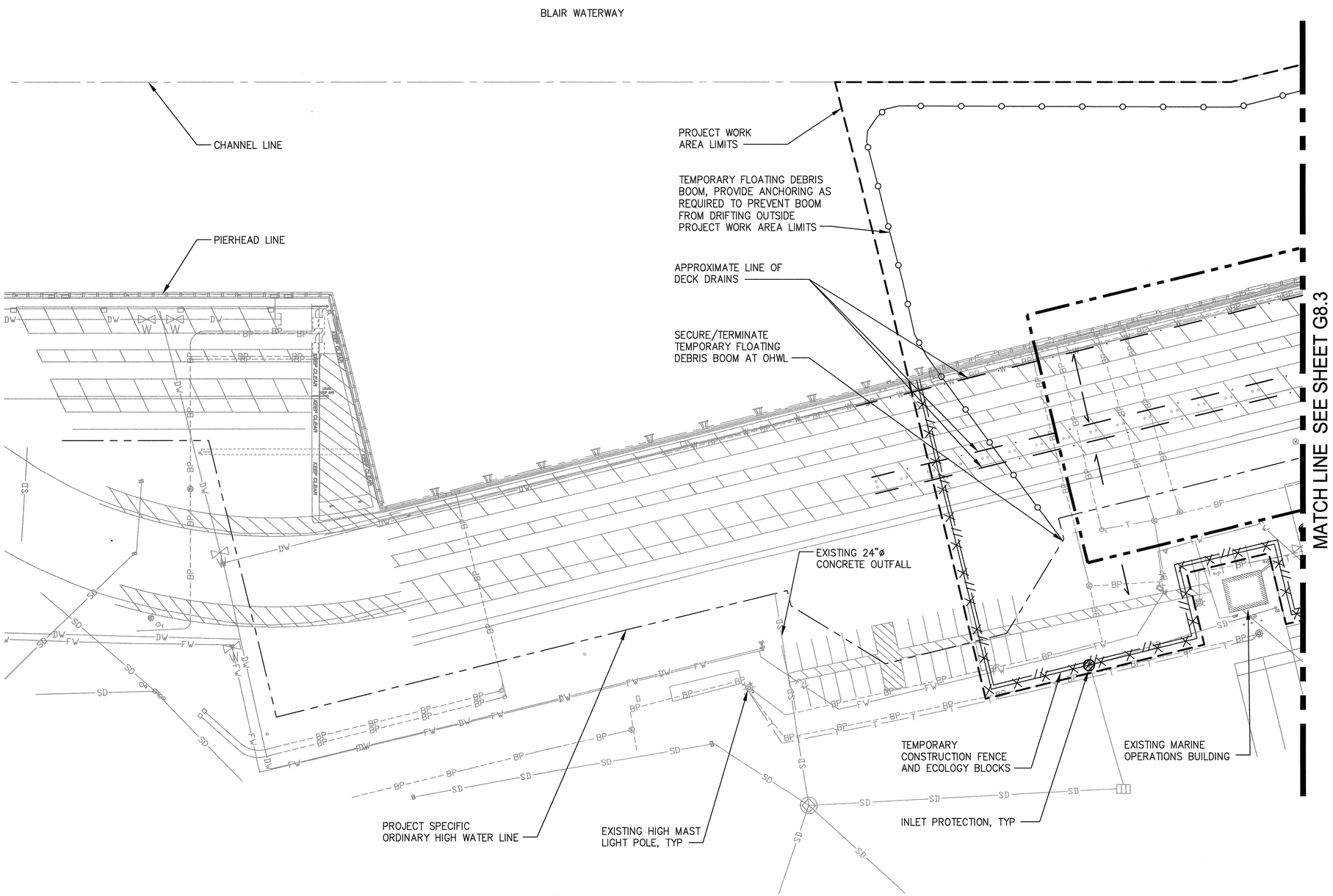

TESC PLAN

SCALE: 1"=40'

TESC NOTES

1. SEE SHEET G8.1 FOR TESC NOTES.
2. SEE SHEET G6.1 FOR TEMPORARY CONSTRUCTION FENCE AND ECOLOGY BLOCK LOCATION.

LEGEND

- PROJECT WORK AREA LIMITS
- DEMOLITION LIMIT LINE, SEE DEMOLITION PLANS
- TEMPORARY CONSTRUCTION FENCE AND ECOLOGY BLOCKS (3 / G8.5)
- INLET PROTECTION, (1 / G8.5)
- TEMPORARY FLOATING DEBRIS BOOM
- TEMPORARY SEDIMENT BARRIER (2 / G8.5)
- PROJECT SPECIFIC ORDINARY HIGH WATER LINE
- APPROXIMATE LINE OF DECK DRAINS
- GENERAL DIRECTION OF SURFACE FLOW

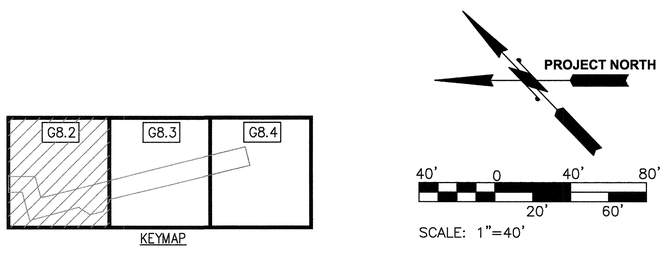

SCALE: 1"=40'

KEYMAP

Port of Tacoma
P.O. BOX 1837 TACOMA, WA 98401 (253)383-5841

kpff
2407 North 31st Street, Suite 100
Tacoma, Washington 98407
(253) 396-0150 Fax (253) 396-0162

MARK:	REVISION:	BY:	APPR:	DATE:

STATE OF WASHINGTON WADE KINGSLEY 36425 REGISTERED PROFESSIONAL ENGINEER

SWK	CHECKED BY	2/6/2015 DATE
MDK	PROJ. ENGR	2/6/2015 DATE
kwang Feb 03, 2015	PRINTED BY:	
ONE SITCUM PLAZA	PORT ADDRESS:	
TACOMA, WA 98401-1837		

APPROVED: 2-6-15
DIRECTOR ENG. DATE

PIER 4 PHASE 1
REMOVAL ACTION PROJECT
TESC PLAN - SHEET 1

TOWNSHIP: 21N	RANGE: 3E	SECTION: 27	
DAT-HRZ: WA83-SF	VERT: MLLW 19.39' @ Tide 22 1933		
PARCEL:	DRAWING SCALE: AS NOTED		

G8.2
SH 10 OF 54

CONT/CONS: 069982	
M. ID: 091452	
PHASE: BID	

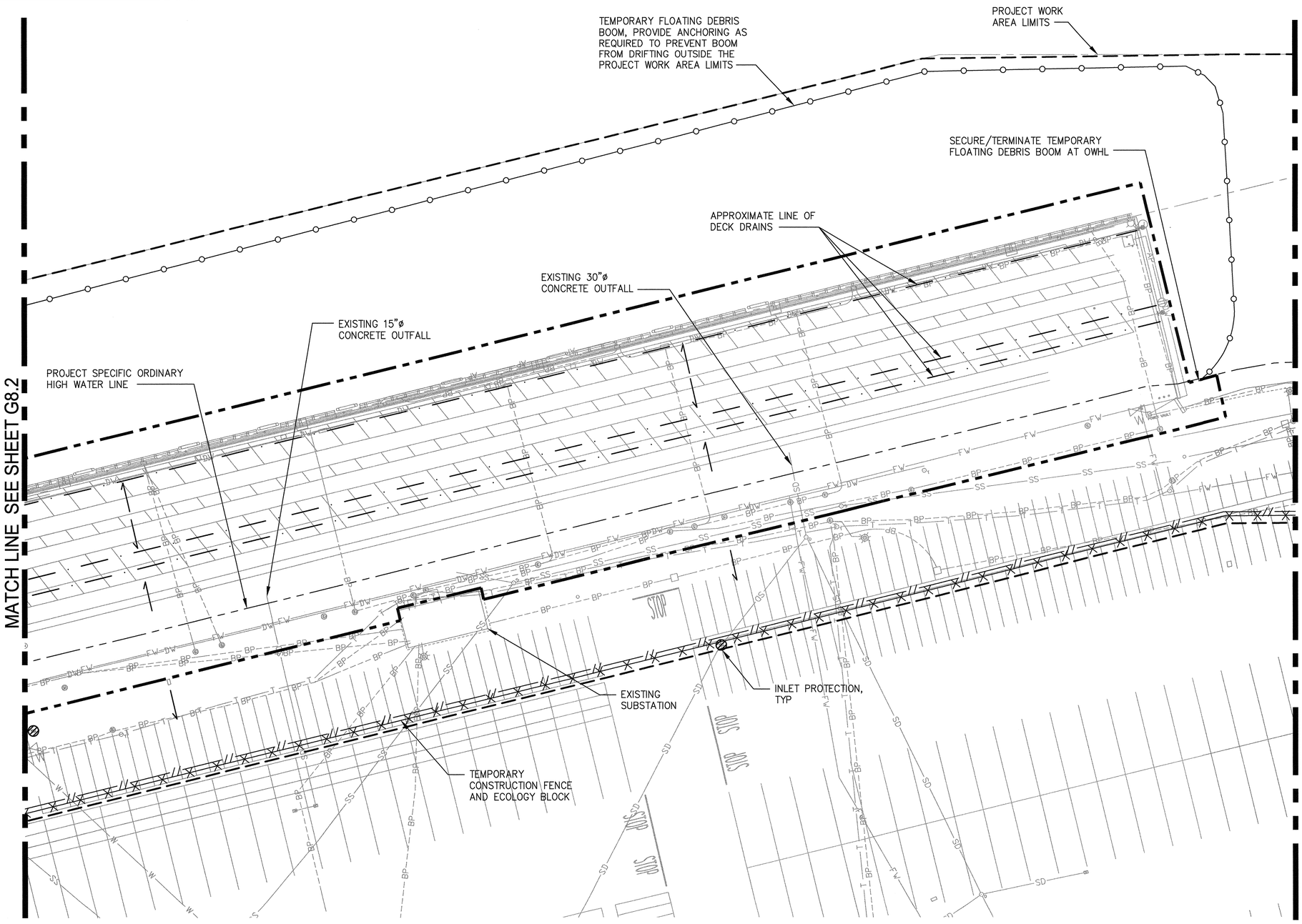

TESC NOTES

1. SEE SHEET G8.1 FOR TESC NOTES.
2. SEE SHEET G6.1 FOR TEMPORARY CONSTRUCTION FENCE AND ECOLOGY BLOCK LOCATION.

LEGEND

- PROJECT WORK AREA LIMITS
- DEMOLITION LIMIT LINE, SEE DEMOLITION PLANS
- TEMPORARY CONSTRUCTION FENCE AND ECOLOGY BLOCKS (3 / G8.5)
- INLET PROTECTION, (1 / G8.5)
- TEMPORARY FLOATING DEBRIS BOOM
- TEMPORARY SEDIMENT BARRIER (2 / G8.5)
- PROJECT SPECIFIC ORDINARY HIGH WATER LINE
- APPROXIMATE LINE OF DECK DRAINS
- GENERAL DIRECTION OF SURFACE FLOW

TESC PLAN

SCALE: 1"=40'

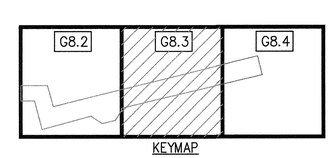

KEYMAP

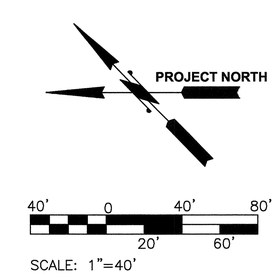

SCALE: 1"=40'

Port of Tacoma
P.O. BOX 1837 TACOMA, WA 98401 (253)383-5841

kpff
2407 North 31st Street, Suite 100
Tacoma, Washington 98407
(253) 396-0150 Fax (253) 396-0162

MARK:	REVISION:	BY:	APPR:	DATE:

	SWK	2/6/2015
	CHECKED BY	DATE
	MDK	2/6/2015
	PROJ. ENGR	DATE

APPROVED: 2-6-15
DIRECTOR ENG. DATE

PRINTED BY: kvang Feb 03, 2015
PORT ADDRESS: ONE SITCUM PLAZA
TACOMA, WA 98401-1837

PIER 4 PHASE 1
REMOVAL ACTION PROJECT
TESC PLAN - SHEET 2

G8.3
SH 11 OF 54

CONT/CONS: 069982	TOWNSHIP: 21N	RANGE: 3E	SECTION: 27
M. ID: 091452	DAT-HRZ: WA83-SF	VERT: MLLW 19.39' @ Tide 22 1933	
PHASE: BID	PARCEL:	DRAWING SCALE: AS NOTED	

PORT OF TACOMA FILE: M:\2014\114096 POT Pier 4 Reconfiguration\Drawings\Current\Phase 1_091452\091452-G8.2-G8.3-G8.4 (TESC Plan - Sheet X)
BINDING EDGE

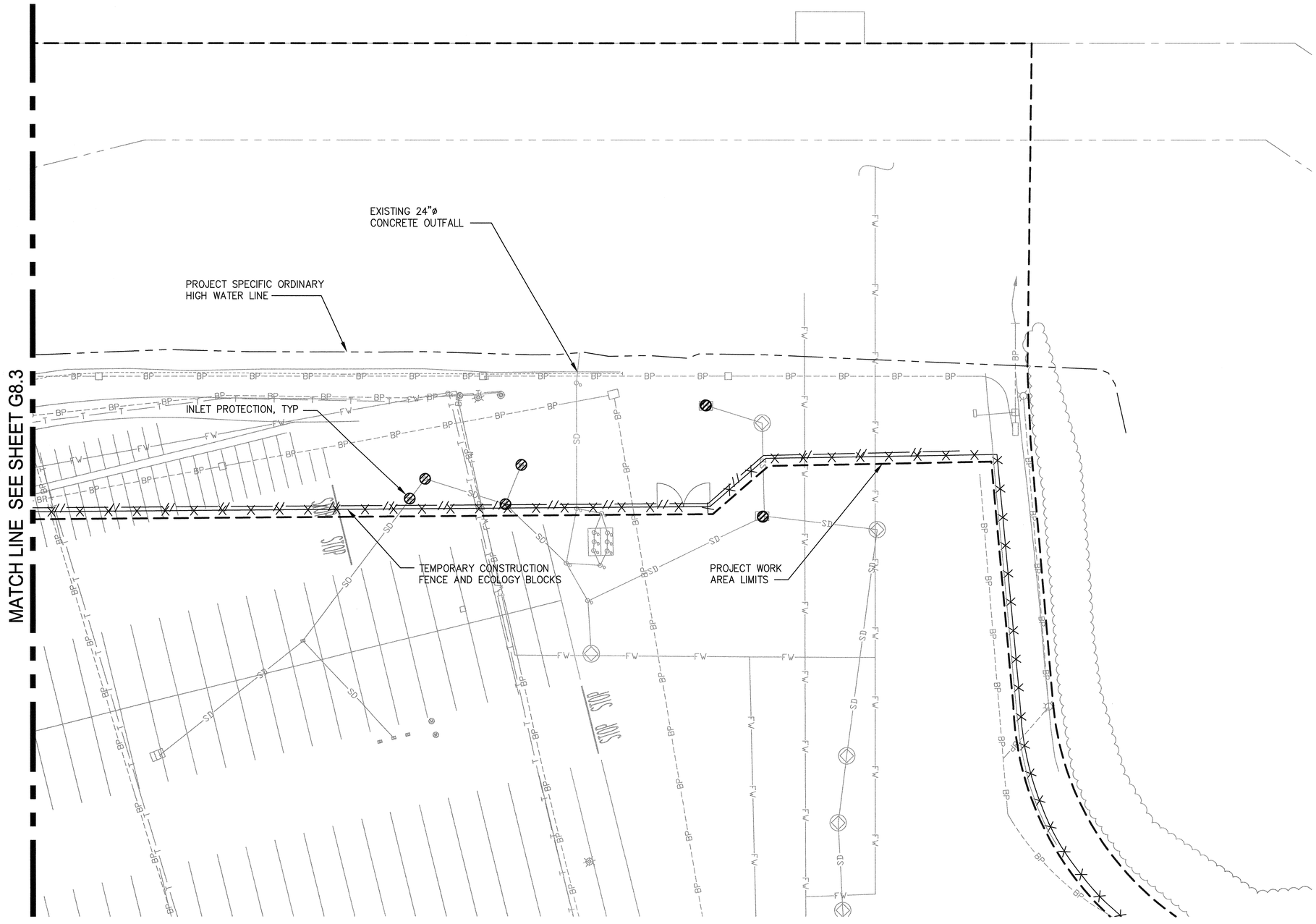

TESC PLAN

SCALE: 1"=40'

TESC NOTES

1. SEE SHEET G8.1 FOR TESC NOTES.
2. SEE SHEET G6.1 FOR TEMPORARY CONSTRUCTION FENCE AND ECOLOGY BLOCK LOCATION.

LEGEND

- PROJECT WORK AREA LIMITS
- DEMOLITION LIMIT LINE, SEE DEMOLITION PLANS
- TEMPORARY CONSTRUCTION FENCE AND ECOLOGY BLOCKS (3 / G8.5)
- INLET PROTECTION, (1 / G8.5)
- TEMPORARY FLOATING DEBRIS BOOM
- TEMPORARY SEDIMENT BARRIER (2 / G8.5)
- PROJECT SPECIFIC ORDINARY HIGH WATER LINE
- APPROXIMATE LINE OF DECK DRAINS
- GENERAL DIRECTION OF SURFACE FLOW

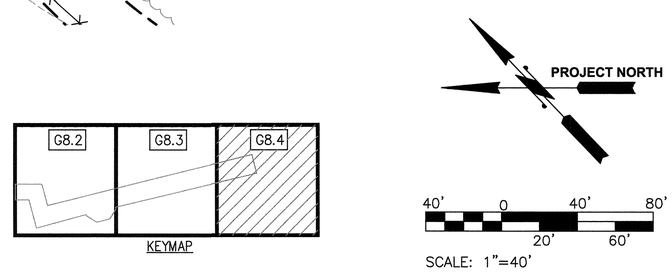

Port of Tacoma
P.O. BOX 1837 TACOMA, WA 98401 (253)383-5841

kpff
2407 North 31st Street, Suite 100
Tacoma, Washington 98407
(253) 396-0150 Fax (253) 396-0162

MARK:	REVISION:	BY:	APPR:	DATE:

STATE OF WASHINGTON
WADE KINGSLEY
46425
REGISTERED PROFESSIONAL ENGINEER

	SWK	2/6/2015
	CHECKED BY	DATE
	MDK	2/6/2015
	PROJ. ENGR	DATE
APPROVED: 2-6-15	kvang Feb 03, 2015	
DIRECTOR ENG. DATE	PRINTED BY:	
	PORT ADDRESS: ONE SITCUM PLAZA	
	TACOMA, WA 98401-1837	

PIER 4 PHASE 1
REMOVAL ACTION PROJECT
TESC PLAN - SHEET 3

G8.4

SH 12 OF 54

CONT/CONS: 069982	TOWNSHIP: 21N	RANGE: 3E	SECTION: 27
M. ID: 091452	DAT-HRZ: WA83-SF	VERT: MLLW 19.39' @ Tide 22 1933	
PHASE: BID	PARCEL:	DRAWING SCALE: AS NOTED	

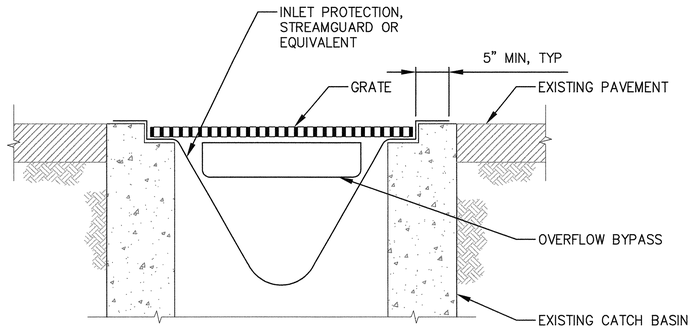

MAINTENANCE STANDARDS:

1. ANY ACCUMULATED SEDIMENT ON OR AROUND THE FILTER FABRIC SHALL BE REMOVED IMMEDIATELY. SEDIMENT SHALL NOT BE REMOVED BY FLUSHING. ALL SEDIMENT MUST BE DISPOSED OF OFF-SITE.
2. ANY SEDIMENT IN THE CATCH BASIN INSERT SHALL BE REMOVED WHEN SEDIMENT HAS FILLED ONE-THIRD OF THE AVAILABLE STORAGE. THE FILTER MEDIA FOR THE INSERT SHALL BE CLEANED OR REPLACED AT LEAST MONTHLY, OR AS DIRECTED BY THE ENGINEER.

CATCH BASIN INLET PROTECTION

1 G8.2, G8.3, G8.4 NTS

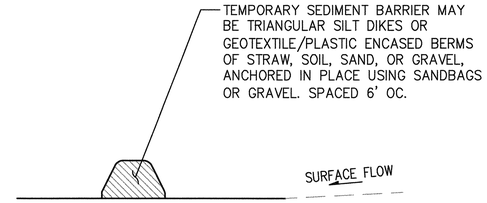

TEMPORARY SEDIMENT BARRIER

2 G8.2, G8.3, G8.4 NTS

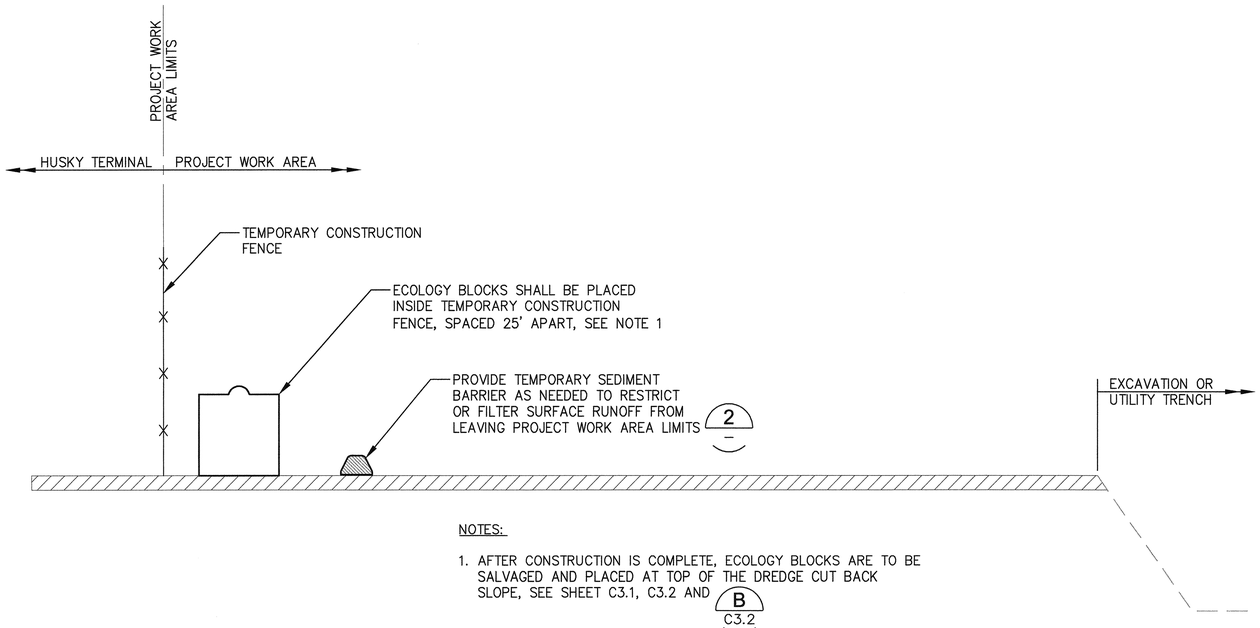

NOTES:

1. AFTER CONSTRUCTION IS COMPLETE, ECOLOGY BLOCKS ARE TO BE SALVAGED AND PLACED AT TOP OF THE DREDGE CUT BACK SLOPE, SEE SHEET C3.1, C3.2 AND B C3.2

DETAIL- TYP EXCAVATION SECTION

3 G8.2, G8.3, G8.4 NTS

Port of Tacoma
P.O. BOX 1837 TACOMA, WA 98401 (253)383-5841

kpff
2407 North 31st Street, Suite 100
Tacoma, Washington 98407
(253) 396-0150 Fax (253) 396-0162

MARK:	REVISION:	BY:	APPR:	DATE:

APPROVED: 2-6-15
DIRECTOR ENG. DATE

SWK	2/6/2015
CHECKED BY	DATE
MDK	2/6/2015
PROJ. ENGR	DATE

PRINTED BY: kvang Feb 03, 2015
PORT ADDRESS: ONE SITCUM PLAZA
TACOMA, WA 98401-1837

PIER 4 PHASE 1 REMOVAL ACTION PROJECT

TESC DETAILS

G8.5

SH 13 OF 54

CONT/CONS: 069982	TOWNSHIP: 21N	RANGE: 3E	SECTION: 27
M. ID: 091452	DAT-HRZ: WA83-SF	VERT: MLLW 19.39' @ Tide 22 1933	
PHASE: BID	PARCEL:	DRAWING SCALE: AS NOTED	

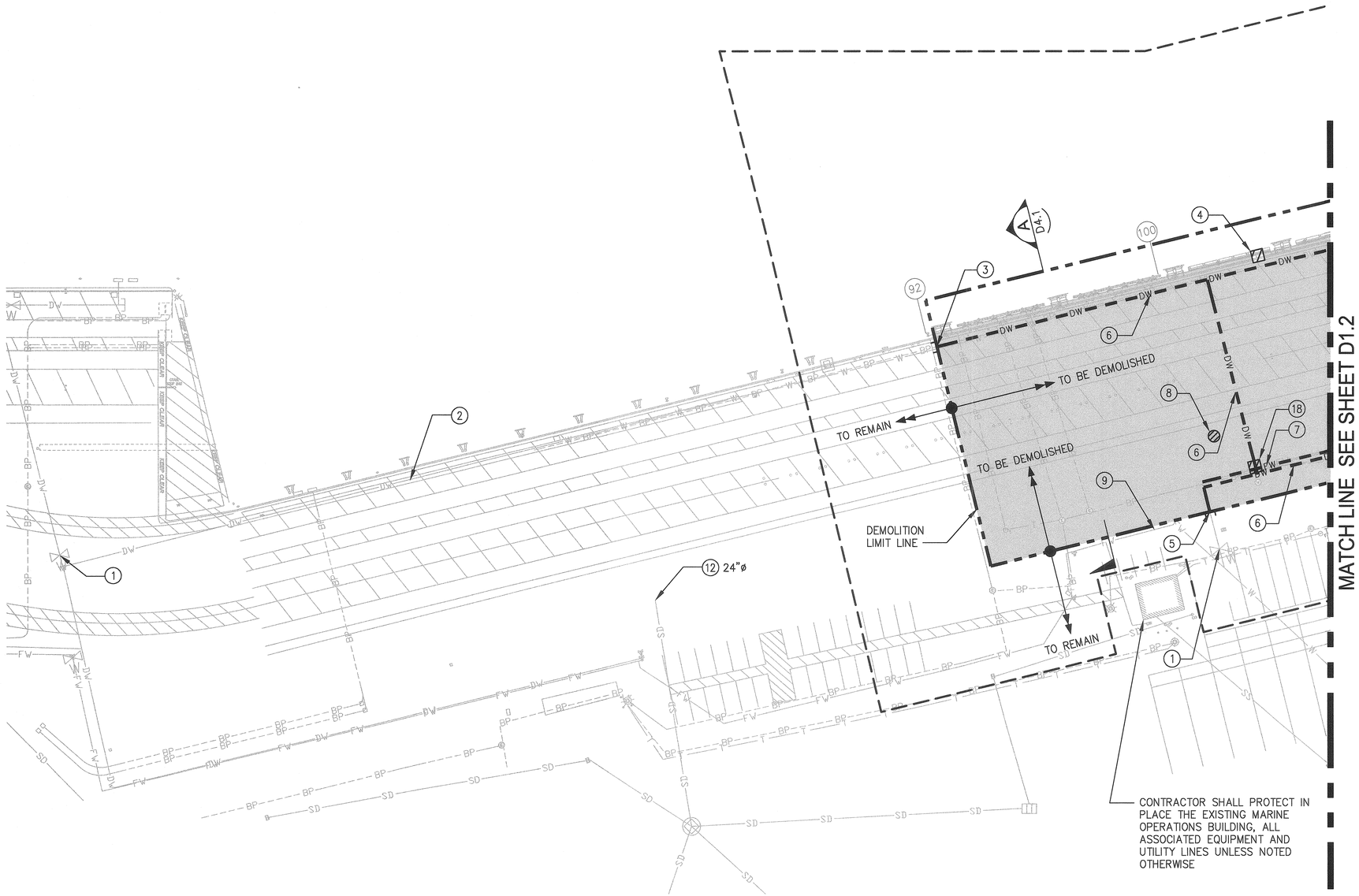

UTILITY AND SITE DEMOLITION PLAN

SCALE: 1"=40'

NOTES

1. SEE PIER 4 DEMOLITION PLANS FOR STRUCTURE DEMOLITION REQUIREMENTS.
2. SEE SITE ELECTRICAL DEMOLITION PLAN FOR ELECTRICAL DEMOLITION REQUIREMENTS.
3. ALL ITEMS MARKED FOR DEMOLITION SHALL BECOME PROPERTY OF THE CONTRACTOR AND SHALL BE REMOVED FROM THE SITE AND DISPOSED OF PER THE SPECIFICATIONS.

KEY NOTES

1. PRIOR TO BEGINNING WATER LINE DEMOLITION FIELD LOCATE AND CLOSE EXISTING GATE VALVES
2. ABANDON EXISTING 4"ø PRESSURIZED DOMESTIC WATER LINE
3. CUT AND CAP EXISTING 4"ø PRESSURIZED DOMESTIC WATER LINE APPROXIMATELY 3.5' SOUTH OF BENT 92 PER DETAIL 2 ON SHEET D1.3
4. DEMOLISH EXISTING SHIP SERVICE PIPING, VALVES, METERS BACKFLOW PREVENTOR, STRAINER AND VAULT
5. CUT AND CAP EXISTING 4"ø PRESSURIZED DOMESTIC WATER LINE AT LIMITS OF DREDGE SLOPE PER DETAIL 2 ON SHEET D1.3
6. DEMOLISH EXISTING 4"ø DOMESTIC WATER LINE
7. DEMOLISH EXISTING 12"ø FIRE WATER LINE
8. DEMOLISH EXISTING GATE VALVE
9. PROTECT IN PLACE EXISTING FIRE WATER LINE
10. CUT AND CAP EXISTING 10"ø OR 12"ø PRESSURIZED FIRE WATER LINE PER DETAIL 2 ON SHEET D1.3
11. DEMOLISH CONCRETE OUTFALL STRUCTURE PER DETAIL 1/D1.3, CUT AND STABILIZE EXISTING CONC OUTFALL PIPE AT DREDGE CUT BACK SLOPE
12. PROTECT IN PLACE EXISTING CONCRETE OUTFALL PIPE AND STRUCTURE
13. DEMOLISH EXISTING SANITARY SEWER MANHOLE AND BACKFILL VOID
14. DEMOLISH EXISTING SANITARY SEWER GRAVITY LINE
15. CUT AND CAP EXISTING SANITARY SEWER GRAVITY LINE AT DREDGE CUT BACK SLOPE, PER DETAIL 2 ON SHEET D1.3
16. CUT AND CAP 6" FIRE HYDRANT LATERAL. ABANDON FIRE HYDRANT AND VAULT
17. DEMOLISH AND SALVAGE FOR RELOCATION THE EXISTING NAVIGATION LIGHT, SEE NAVIGATION LIGHTING PLAN FOR ADDITIONAL REQUIREMENTS
18. DEMOLISH EXISTING WATER VAULT AND APPURTENANCES
19. DEMOLISH EXISTING WATER SYSTEM HOTBOX AND ASSOCIATED EQUIPMENT

LEGEND

- DEMOLISH AND REMOVE EXISTING UTILITY, UTILITY TYPE INDICATED ON PLANS
- DEMOLISH AND REMOVE EXISTING UTILITY STRUCTURE AND APPURTENANCES
- DEMOLISH ASPHALT PAVING
- CUT AND CAP EXISTING UTILITY, 2 / D1.3
- DEMOLITION LIMIT LINE
- PROJECT WORK AREA LIMITS

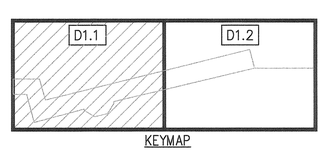

KEYMAP

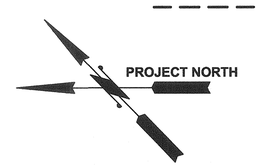

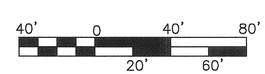

SCALE: 1"=40'

Port of Tacoma
P.O. BOX 1837 TACOMA, WA 98401 (253)383-5841

kpff
2407 North 31st Street, Suite 100
Tacoma, Washington 98407
(253) 396-0150 Fax (253) 396-0162

MARK:	REVISION:	BY:	APPR:	DATE:

STATE OF WASHINGTON
WADE KINGSLEY
46425
REGISTERED PROFESSIONAL ENGINEER

		SWK	2/6/2015
		CHECKED BY	DATE
		MDK	2/6/2015
		PROJ. ENGR	DATE
APPROVED:	2-6-15		
	DIRECTOR ENG. DATE	PRINTED BY: kvang Feb 03, 2015	
PORT ADDRESS: ONE SITCUM PLAZA TACOMA, WA 98401-1837			

PIER 4 PHASE 1
REMOVAL ACTION PROJECT
UTILITY AND SITE DEMOLITION PLAN - SHEET 1

D1.1

SH 14 OF 54

CONT/CONS: 069982	TOWNSHIP: 21N	RANGE: 3E	SECTION: 27
M. ID: 091452	DAT-HRZ: WA83-SF	VERT: MLLW 19.39' @ Tide 22 1933	
PHASE: BID	PARCEL:	DRAWING SCALE: AS NOTED	

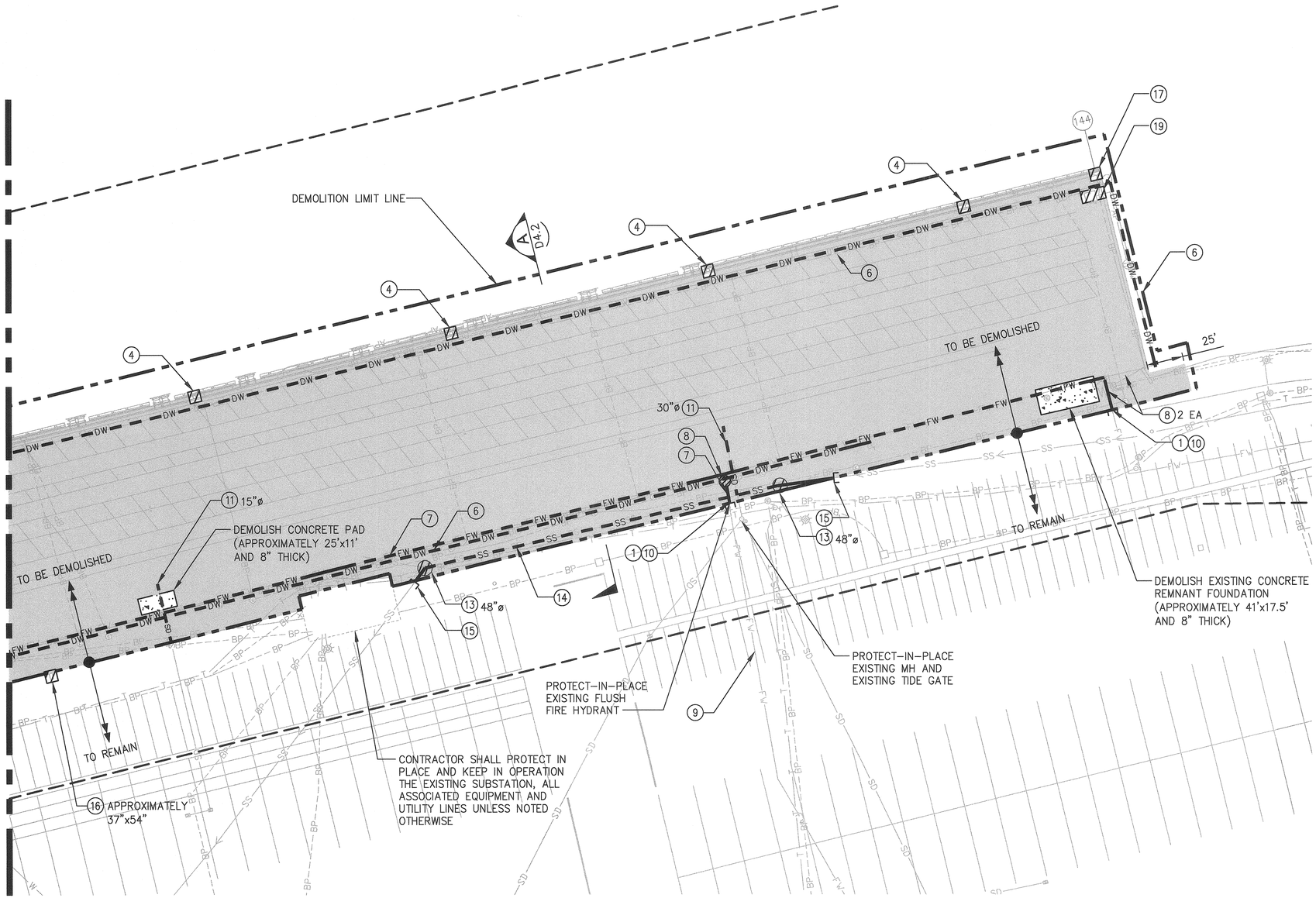

UTILITY AND SITE DEMOLITION PLAN

SCALE: 1"=40'

NOTES

1. SEE PIER 4 DEMOLITION PLANS FOR STRUCTURE DEMOLITION REQUIREMENTS.
2. SEE SITE ELECTRICAL DEMOLITION PLAN FOR ELECTRICAL DEMOLITION REQUIREMENTS.
3. ALL ITEMS MARKED FOR DEMOLITION SHALL BECOME PROPERTY OF THE CONTRACTOR AND SHALL BE REMOVED FROM THE SITE AND DISPOSED OF PER THE SPECIFICATIONS.

KEY NOTES

1. PRIOR TO BEGINNING WATER LINE DEMOLITION FIELD LOCATE AND CLOSE EXISTING GATE VALVES
2. ABANDON EXISTING 4"ø PRESSURIZED DOMESTIC WATER LINE
3. CUT AND CAP EXISTING 4"ø PRESSURIZED DOMESTIC WATER LINE APPROXIMATELY 3.5' SOUTH OF BENT 92 PER DETAIL 2 ON SHEET D1.3
4. DEMOLISH EXISTING SHIP SERVICE PIPING, VALVES, METERS BACKFLOW PREVENTOR, STRAINER AND VAULT
5. CUT AND CAP EXISTING 4"ø PRESSURIZED DOMESTIC WATER LINE AT LIMITS OF DREDGE SLOPE PER DETAIL 2 ON SHEET D1.3
6. DEMOLISH EXISTING 4"ø DOMESTIC WATER LINE
7. DEMOLISH EXISTING 12"ø FIRE WATER LINE
8. DEMOLISH EXISTING GATE VALVE
9. PROTECT IN PLACE EXISTING FIRE WATER LINE
10. CUT AND CAP EXISTING 10"ø OR 12"ø PRESSURIZED FIRE WATER LINE PER DETAIL 2 ON SHEET D1.3
11. DEMOLISH CONCRETE OUTFALL STRUCTURE PER DETAIL 1/D1.3, CUT AND STABILIZE EXISTING CONC OUTFALL PIPE AT DREDGE CUT BACK SLOPE
12. PROTECT IN PLACE EXISTING CONCRETE OUTFALL PIPE AND STRUCTURE
13. DEMOLISH EXISTING SANITARY SEWER MANHOLE AND BACKFILL VOID
14. DEMOLISH EXISTING SANITARY SEWER GRAVITY LINE
15. CUT AND CAP EXISTING SANITARY SEWER GRAVITY LINE AT DREDGE CUT BACK SLOPE, PER DETAIL 2 ON SHEET D1.3
16. CUT AND CAP 6" FIRE HYDRANT LATERAL. ABANDON FIRE HYDRANT AND VAULT.
17. DEMOLISH AND SALVAGE FOR RELOCATION THE EXISTING NAVIGATION LIGHT, SEE NAVIGATION LIGHTING PLAN FOR ADDITIONAL REQUIREMENTS
18. DEMOLISH EXISTING WATER VAULT AND APPURTENANCES
19. DEMOLISH EXISTING WATER SYSTEM HOTBOX AND ASSOCIATED EQUIPMENT

LEGEND

- DEMOLISH AND REMOVE EXISTING UTILITY, UTILITY TYPE INDICATED ON PLANS
- DEMOLISH AND REMOVE EXISTING UTILITY STRUCTURE AND APPURTENANCES
- DEMOLISH ASPHALT PAVING
- CUT AND CAP EXISTING UTILITY, 2 / D1.3
- DEMOLITION LIMIT LINE
- PROJECT WORK AREA LIMITS

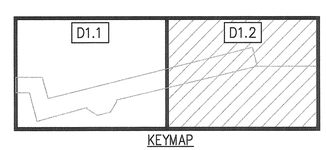

KEYMAP

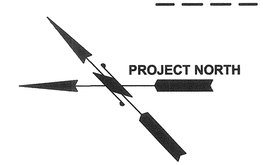

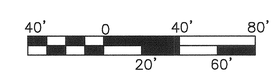

SCALE: 1"=40'

Port of Tacoma
P.O. BOX 1837 TACOMA, WA 98401 (253)383-5841

kpff
2407 North 31st Street, Suite 100
Tacoma, Washington 98407
(253) 396-0150 Fax (253) 396-0162

MARK:	REVISION:	BY:	APPR:	DATE:

WADE KINGSLEY STATE OF WASHINGTON 32726 REGISTERED PROFESSIONAL ENGINEER

SWK	2/6/2015	APPROVED:	2-6-15
CHECKED BY	DATE	DIRECTOR ENG.	DATE
MDK	2/6/2015	PRINTED BY:	kvang Feb 03, 2015
PROJ. ENGR	DATE	PORT ADDRESS:	ONE SITCUM PLAZA TACOMA, WA 98401-1837

PIER 4 PHASE 1
REMOVAL ACTION PROJECT
UTILITY AND SITE DEMOLITION PLAN - SHEET 2

TOWNSHIP: 21N	RANGE: 3E	SECTION: 27	
DAT-HRZ: WA83-SF	VERT: MLLW 19.39' @ Tide 22 1933		
PARCEL:	DRAWING SCALE: AS NOTED		

D1.2
SH 15 OF 54

CONT/CONS: 069982
M. ID: 091452
PHASE: BID

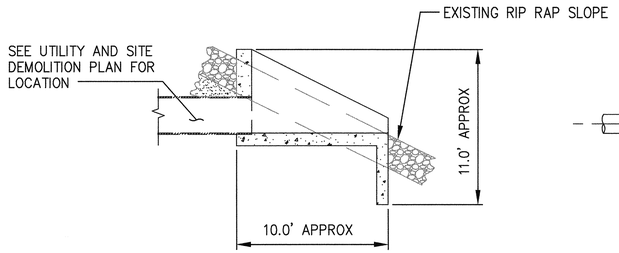

SECTION - OUTFALL

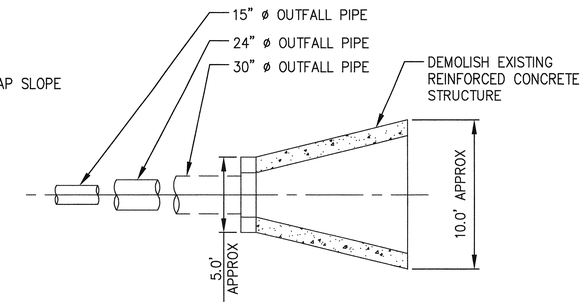

PLAN - OUTFALL

NOTES:

1. ALL DIMENSIONS PROVIDED FOR REFERENCE ONLY.
2. COMPLETELY DEMOLISH OUTFALL PIPING AND REINFORCED CONCRETE WING WALLS
3. AFTER DEMOLITION IS COMPLETE STABILIZE OUTFALL PIPE AT DREDGE CUTBACK SLOPE (3)

(1) OUTFALL DEMOLITION DETAIL

D1.1, D1.2 NTS

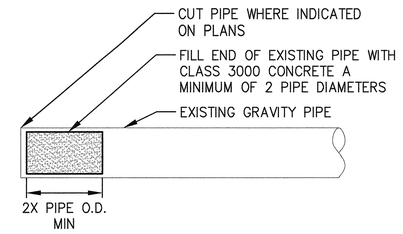

CAP AT GRAVITY LINE

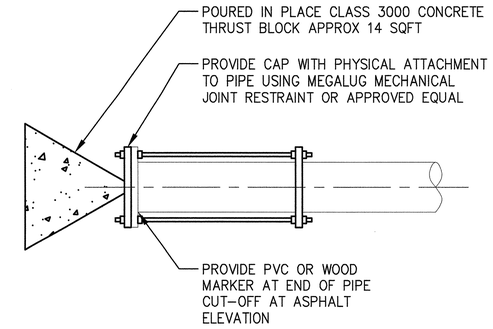

CAP AT PRESSURIZED LINE

NOTES

1. THRUST BLOCK SHALL BEAR AGAINST UNDISTURBED NATIVE GROUND OR COMPACTED SELECT BACKFILL.
2. THRUST BLOCK AREA SHALL BE CENTERED ON PIPE.
3. CLASS 3000 CONCRETE SHALL HAVE A COMPRESSIVE STRENGTH AT 28 DAYS OF 3000 PSI.
4. EXISTING PIPE TYPES VARY, CONTRACTOR TO FIELD VERIFY PRIOR TO BEGINNING DEMOLITIONS

(2) CUT AND CAP DETAIL

D1.1, D1.2 NTS

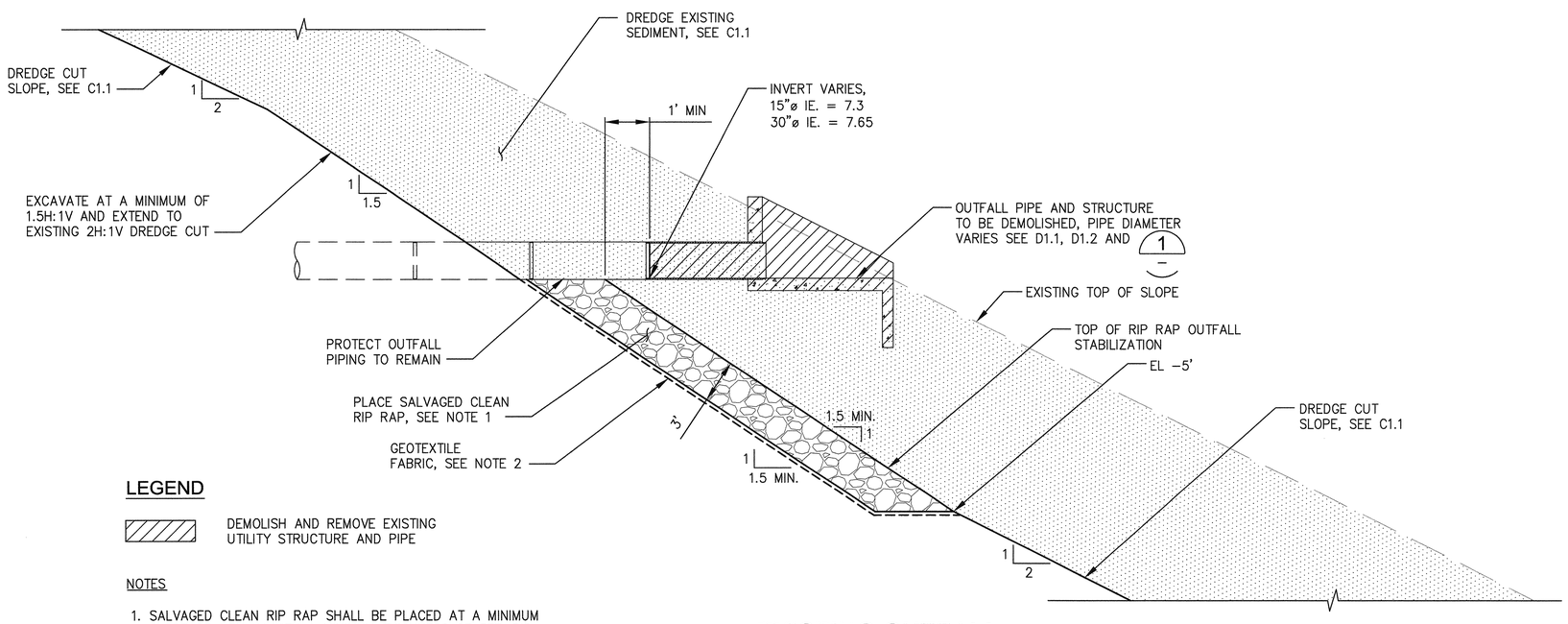

LEGEND

DEMOLISH AND REMOVE EXISTING UTILITY STRUCTURE AND PIPE

NOTES

1. SALVAGED CLEAN RIP RAP SHALL BE PLACED AT A MINIMUM SLOPE OF 1.5H:1V WITH A MINIMUM THICKNESS OF 3FT. RIP RAP SHALL EXTEND FROM THE PIPE INVERT DOWN TO ELEVATION -5' MLLW WITH A MINIMUM APRON WIDTH OF THE PIPE O.D. + 6FT. REMOVE EXISTING CLEAN SEDIMENT AS REQUIRED TO PLACE GEOTEXTILE AND RIP RAP
2. GEOTEXTILE FABRIC SHALL BE MIRAFI FW404 OR APPROVED EQUAL AND INSTALLED PER MANUFACTURERS RECOMMENDATION

(3) EXISTING OUTFALL STABILIZATION DETAIL

D1.1, D1.2 NTS

Port of Tacoma
P.O. BOX 1837 TACOMA, WA 98401 (253)383-5841

kpff
2407 North 31st Street, Suite 100
Tacoma, Washington 98407
(253) 396-0150 Fax (253) 396-0162

MARK:	REVISION:	BY:	APPR:	DATE:

STATE OF WASHINGTON
MADE KINGSLEY
REGISTERED PROFESSIONAL ENGINEER
45125

	SWK	2/6/2015
	CHECKED BY	DATE
	MDK	2/6/2015
	PROJ. ENGR	DATE
	PRINTED BY: enielsen Feb 05, 2015	
	PORT ADDRESS: ONE SITCUM PLAZA TACOMA, WA 98401-1837	

APPROVED: 2-6-15
DIRECTOR ENG. DATE

PIER 4 PHASE 1
REMOVAL ACTION PROJECT
UTILITY AND SITE DEMOLITION DETAILS

D1.3

SH 16 OF 54

CONT/CONS: 069982	TOWNSHIP: 21N	RANGE: 3E	SECTION: 27
M. ID: 091452	DAT-HRZ: WA83-SF	VERT: MLLW 19.39' @ Tide 22 1933	
PHASE: BID	PARCEL:	DRAWING SCALE: AS NOTED	

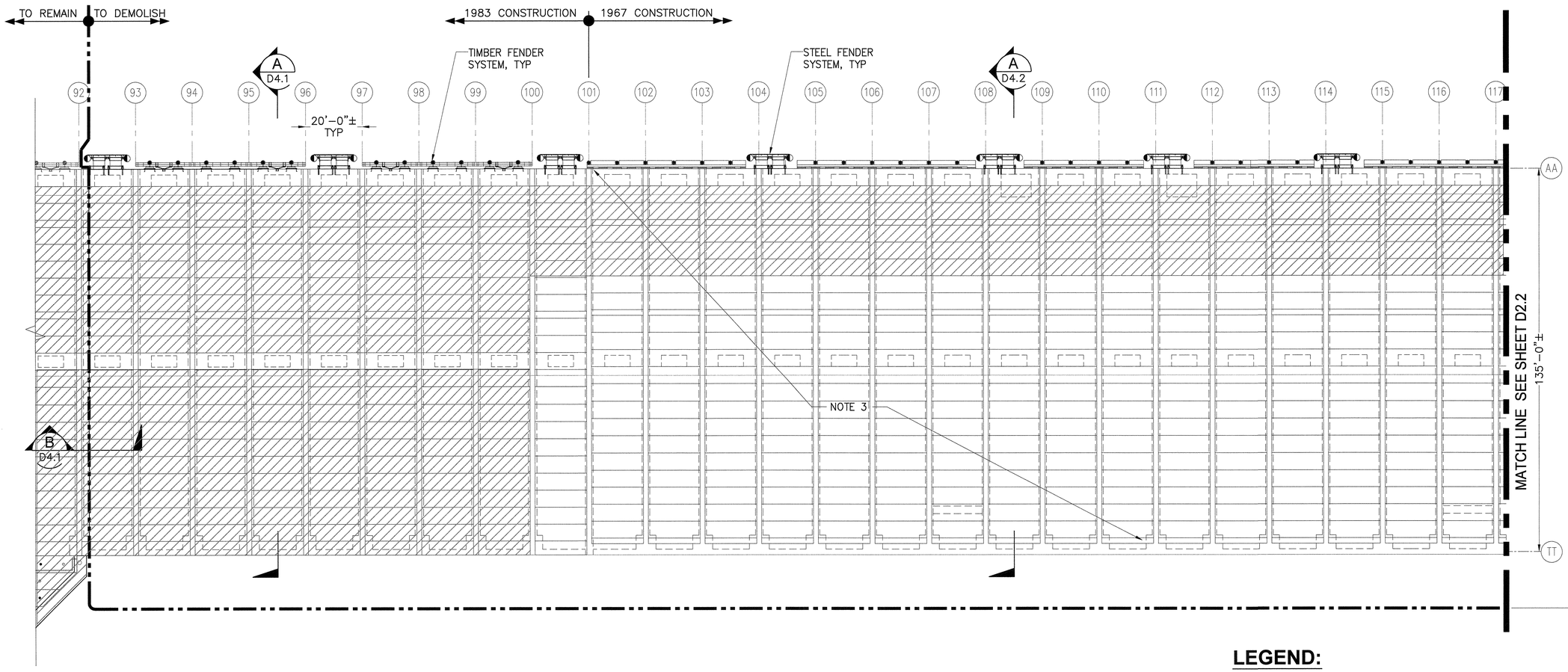

PIER DEMOLITION NOTES:

1. SEE ELECTRICAL DEMOLITION PLANS FOR ELECTRICAL DEMOLITION REQUIREMENTS.
2. INFORMATION REGARDING EXISTING CONDITIONS DEPICTED HEREIN WAS OBTAINED FROM RECORD DRAWINGS PROVIDED BY PORT OF TACOMA. CONTRACTOR SHALL REVIEW REFERENCE DRAWINGS AND VERIFY ALL EXISTING CONDITIONS IN THE FIELD. SEE SPECIFICATIONS.
3. DEMOLISH AND REMOVE EVERYTHING WITHIN DEMOLITION LIMITS SHOWN, INCLUDING BUT NOT LIMITED TO EXISTING PAVING, BALLAST, DECK PANELS, PILE CAPS, FENDERS, BOLLARDS, CRANE RAIL, AND CONCRETE STRUCTURE, UNLESS NOTED OTHERWISE.

LEGEND:

- (XX) BENT NUMBER, ROW NUMBER FROM RECORD DRAWINGS
- LIMITS OF DEMOLITION
- TIMBER FENDER PILE
- STEEL FENDER PILE
- 1'-3"± DEEP PIER DECK BALLAST

0 20 40 60
SCALE IN FEET

PROJECT NORTH

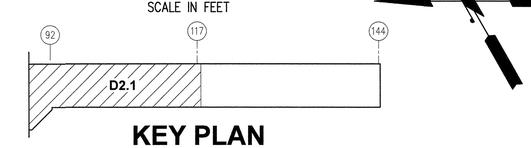

KEY PLAN

1 — **PIER DEMOLITION PLAN**
1" = 20'-0"

Port of Tacoma
P.O. BOX 1837 TACOMA, WA 98401 (253)383-5841

kpff
2407 North 31st Street, Suite 100
Tacoma, Washington 98407
(253) 396-0150 Fax (253) 396-0162

MARK:	REVISION:	BY:	APPR:	DATE:

STATE OF WASHINGTON — STEVEN E. ROBERTSON — 20208 — REGISTERED PROFESSIONAL ENGINEER
2-6-15

PIER 4 PHASE 1
REMOVAL ACTION PROJECT
PIER DEMOLITION PLAN - SHEET 1

APPROVED: 2-6-15
DIRECTOR ENG. DATE

SEK	2/6/15
CHECKED BY	DATE
TAH	2/6/15
PROJ. ENGR	DATE

PRINTED BY: dmumma Feb 03, 2015
PORT ADDRESS: ONE SITCUM PLAZA TACOMA, WA 98401-1837

D2.1
SH 17 OF 54

CONT/CONS: 069982	TOWNSHIP: 21N	RANGE: 3E	SECTION: 27
M. ID: 091452	DAT-HRZ: WA83-SF	VERT: MLLW 19.39' @ Tide 22 1933	
PHASE: BID	PARCEL:	DRAWING SCALE: AS NOTED	

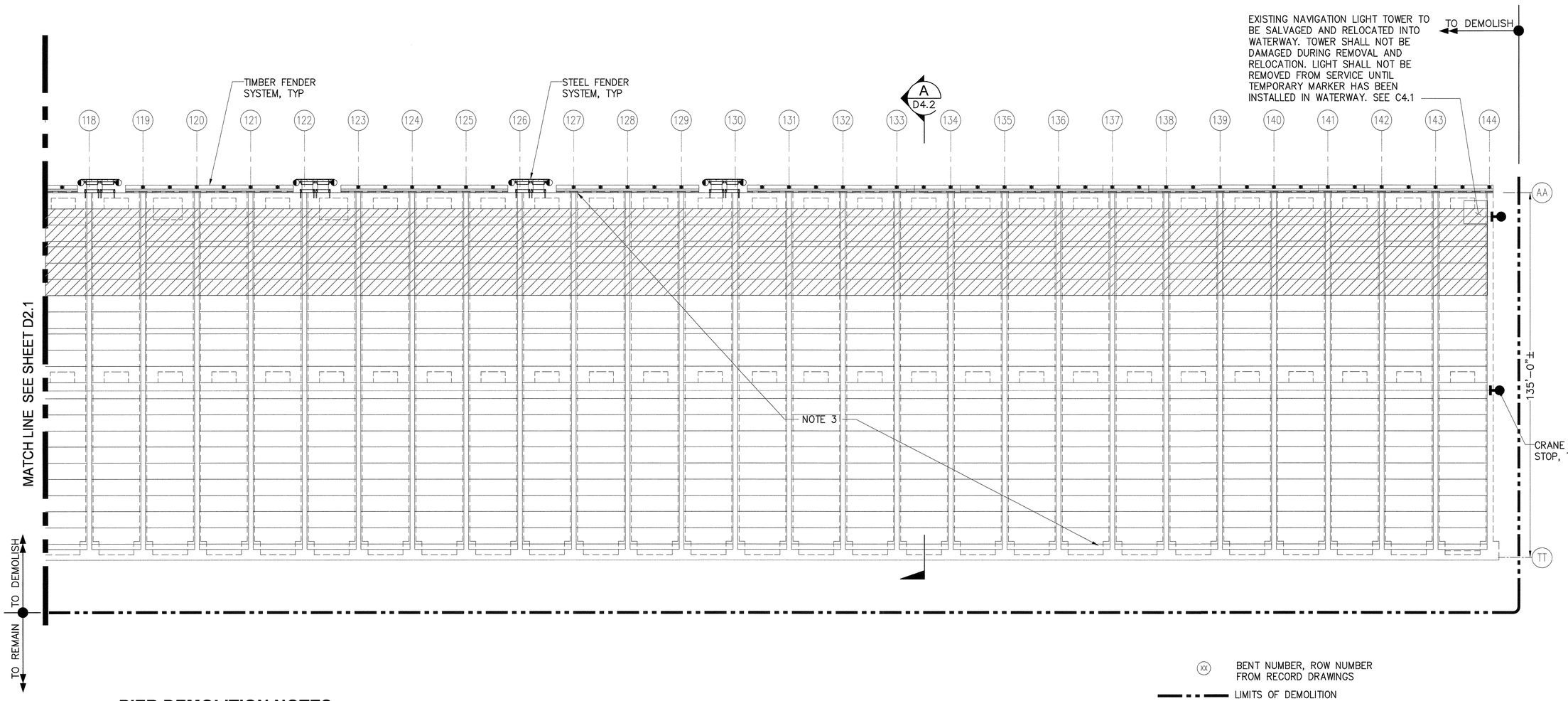

PIER DEMOLITION NOTES:

1. SEE ELECTRICAL DEMOLITION PLANS FOR ELECTRICAL DEMOLITION REQUIREMENTS.
2. INFORMATION REGARDING EXISTING CONDITIONS DEPICTED HEREIN WAS OBTAINED FROM RECORD DRAWINGS PROVIDED BY PORT OF TACOMA. CONTRACTOR SHALL REVIEW REFERENCE DRAWINGS AND VERIFY ALL EXISTING CONDITIONS IN THE FIELD. SEE SPECIFICATIONS.
3. DEMOLISH AND REMOVE EVERYTHING WITHIN DEMOLITION LIMITS SHOWN, INCLUDING BUT NOT LIMITED TO EXISTING PAVING, BALLAST, DECK PANELS, PILE CAPS, FENDERS, BOLLARDS, CRANE RAIL, AND CONCRETE STRUCTURE, UNLESS NOTED OTHERWISE.

(XX) BENT NUMBER, ROW NUMBER FROM RECORD DRAWINGS

LIMITS OF DEMOLITION

TIMBER FENDER PILE

STEEL FENDER PILE

1'-3"± DEEP PIER DECK BALLAST

0 20 40 60

SCALE IN FEET

PROJECT NORTH

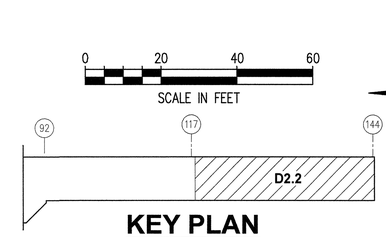

KEY PLAN

1 – **PIER DEMOLITION PLAN**

1" = 20'-0"

kpff
2407 North 31st Street, Suite 100
Tacoma, Washington 98407
(253) 396-0150 Fax (253) 396-0162

Port of Tacoma
P.O. BOX 1837 TACOMA, WA 98401 (253)383-5841

MARK:	REVISION:	BY:	APPR:	DATE:

APPROVED: 2-6-15
DIRECTOR ENG. DATE

SEK	2/6/15		
CHECKED BY	DATE		
TAH	2/6/15		
PROJ. ENGR	DATE		

PRINTED BY: dmumma Feb 03, 2015
PORT ADDRESS: ONE SITCUM PLAZA TACOMA, WA 98401-1837

PIER 4 PHASE 1
REMOVAL ACTION PROJECT
PIER DEMOLITION PLAN - SHEET 2

D2.2
SH 18 OF 54

CONT/CONS: 069982	TOWNSHIP: 21N	RANGE: 3E	SECTION: 27
M. ID: 091452	DAT-HRZ: WA83-SF	VERT: MLLW 19.39' @ Tide 22 1933	
PHASE: BID	PARCEL:	DRAWING SCALE: AS NOTED	

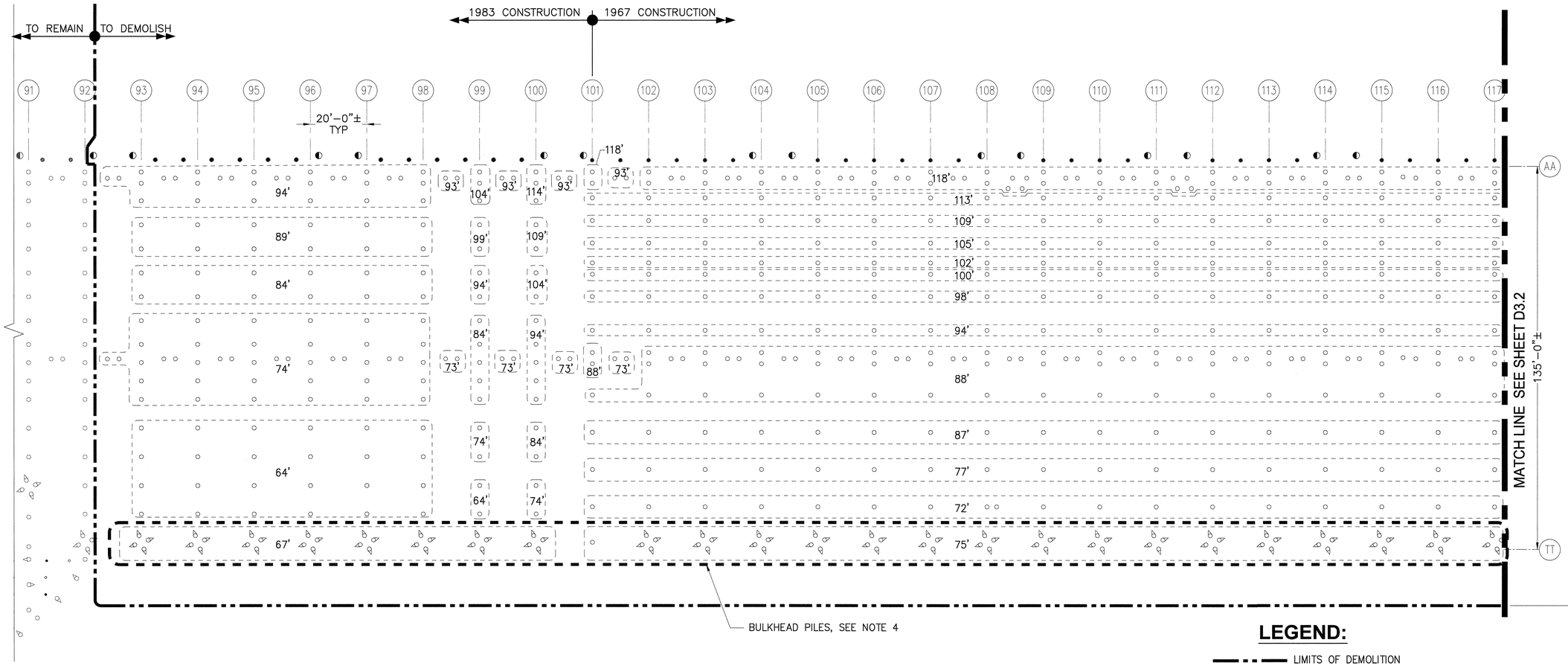

PILE EXTRACTION NOTES:

1. INFORMATION REGARDING EXISTING CONDITIONS DEPICTED HEREIN, INCLUDING PILE LENGTHS, WAS OBTAINED FROM RECORD DRAWINGS PROVIDED BY PORT OF TACOMA. CONTRACTOR SHALL REVIEW REFERENCE DRAWINGS AND VERIFY ALL EXISTING CONDITIONS IN THE FIELD. SEE SPECIFICATIONS.
2. ALL PILES WITHIN THE DEMOLITION LIMITS SHALL BE REMOVED FOR THEIR FULL LENGTH AND DISPOSED OF PER THE SPECIFICATIONS.
3. EXTRACTION OF ALL PILES OTHER THAN BULKHEAD PILES IS SUBJECT TO THE TIMING RESTRICTIONS INDICATED IN THE SPECIFICATIONS.
4. EXTRACTION OF BULKHEAD PILES MAY OCCUR AT ANY TIME DURING THE CONTRACT.

1 — **PILE EXTRACTION PLAN**
1" = 20'-0"

LEGEND:

- LIMITS OF DEMOLITION
- 16 1/2" SOLID OCTAGONAL PRECAST PRESTRESSED CONCRETE PILE – PLUMB
- 16 1/2" SOLID OCTAGONAL PRECAST PRESTRESSED CONCRETE PILE – BATTERED
- TIMBER FENDER PILE, APPROX 88' LONG
- STEEL FENDER PILE, APPROX 100' LONG
- 118' — APPROX CONC PILE LENGTH, EACH PILE. SEE NOTE 2

0 20 40 60
SCALE IN FEET

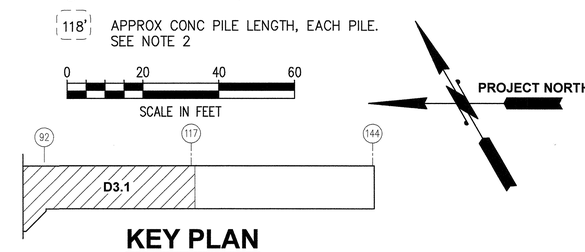

KEY PLAN

kpff
2407 North 31st Street, Suite 100
Tacoma, Washington 98407
(253) 396-0150 Fax (253) 396-0162

Port of Tacoma
P.O. BOX 1837 TACOMA, WA 98401 (253)383-5841

MARK:	REVISION:	BY:	APPR:	DATE:

2-6-15

APPROVED:	SEK	2/6/15
2-6-15	CHECKED BY	DATE
DIRECTOR ENG. DATE	TAH	2/6/15
	PROJ. ENGR	DATE

PRINTED BY: drummma Feb 03, 2015
PORT ADDRESS: ONE SITCUM PLAZA
TACOMA, WA 98401-1837

PIER 4 PHASE 1
REMOVAL ACTION PROJECT
PILE EXTRACTION PLAN - SHEET 1

TOWNSHIP: 21N	RANGE: 3E	SECTION: 27	
DAT-HRZ: WA83-SF	VERT: MLLW 19.39' @ Tide 22 1933		
PARCEL:	DRAWING SCALE: AS NOTED		

D3.1
SH 19 OF 54

CONT/CONS: 069982	
M. ID: 091452	
PHASE: BID	

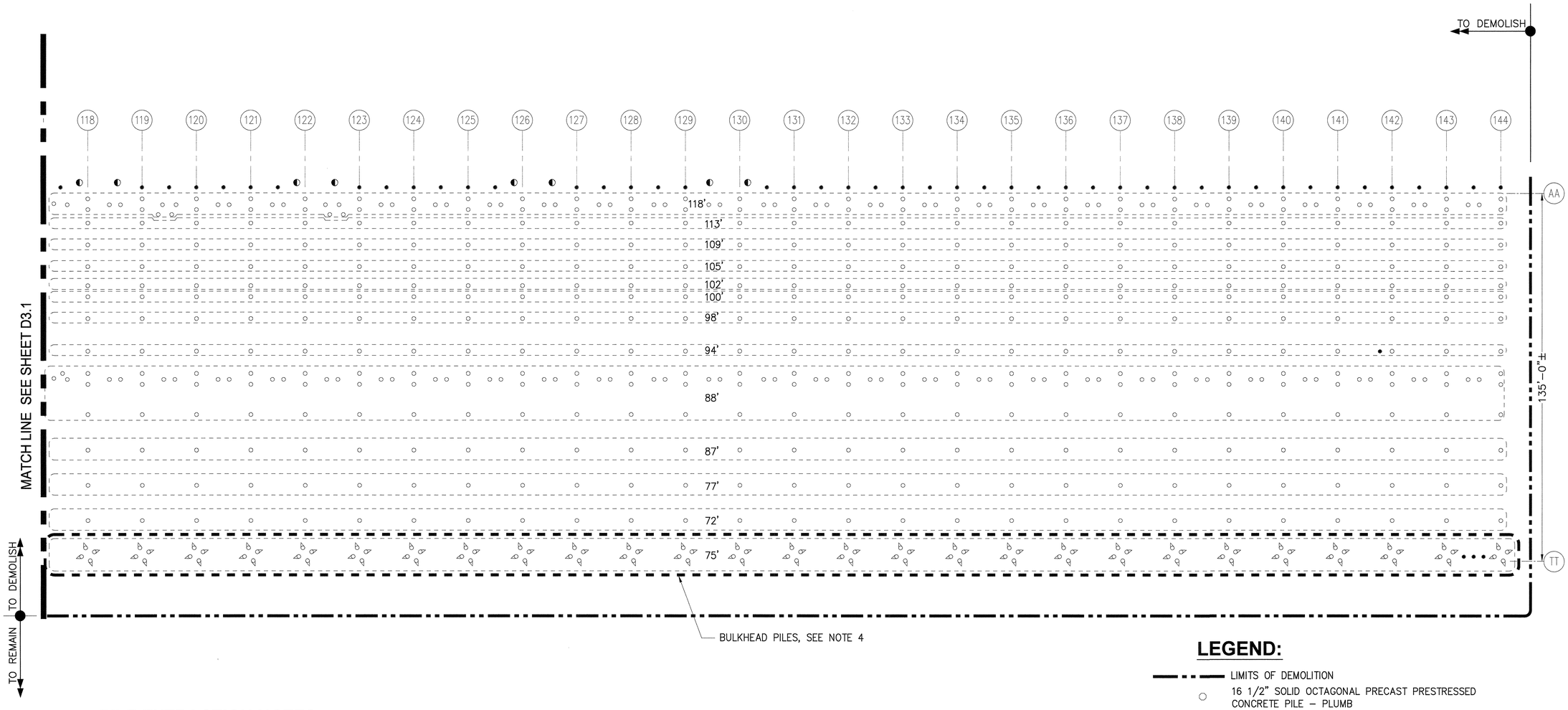

PILE EXTRACTION NOTES:

1. INFORMATION REGARDING EXISTING CONDITIONS DEPICTED HEREIN, INCLUDING PILE LENGTHS, WAS OBTAINED FROM RECORD DRAWINGS PROVIDED BY PORT OF TACOMA. CONTRACTOR SHALL REVIEW REFERENCE DRAWINGS AND VERIFY ALL EXISTING CONDITIONS IN THE FIELD. SEE SPECIFICATIONS.
2. ALL PILES WITHIN THE DEMOLITION LIMITS SHALL BE REMOVED FOR THEIR FULL LENGTH AND DISPOSED OF PER THE SPECIFICATIONS.
3. EXTRACTION OF ALL PILES OTHER THAN BULKHEAD PILES IS SUBJECT TO THE TIMING RESTRICTIONS INDICATED IN THE SPECIFICATIONS.
4. EXTRACTION OF BULKHEAD PILES MAY OCCUR AT ANY TIME DURING THE CONTRACT.

1 — **PILE EXTRACTION PLAN**
1" = 20'-0"

LEGEND:

- LIMITS OF DEMOLITION
- 16 1/2" SOLID OCTAGONAL PRECAST PRESTRESSED CONCRETE PILE – PLUMB
- 16 1/2" SOLID OCTAGONAL PRECAST PRESTRESSED CONCRETE PILE – BATTERED
- TIMBER FENDER PILE, APPROX 88' LONG
- STEEL FENDER PILE, APPROX 100' LONG
- 118' APPROX CONC PILE LENGTH, EACH PILE. SEE NOTE 2

0 20 40 60
SCALE IN FEET

PROJECT NORTH

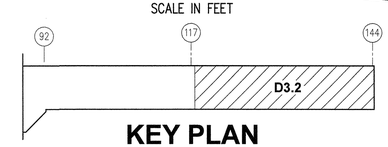

KEY PLAN

Port of Tacoma
P.O. BOX 1837 TACOMA, WA 98401 (253)835-5841

kpff
2407 North 31st Street, Suite 100
Tacoma, Washington 98407
(253) 396-0150 Fax (253) 396-0162

MARK:	REVISION:	BY:	APPR:	DATE:

STATE OF WASHINGTON
STEVEN E. KIMBLER
38536
REGISTERED PROFESSIONAL ENGINEER

APPROVED: 2-6-15
DIRECTOR ENG. DATE

CHECKED BY	SEK 2/6/15 DATE
PROJ. ENGR	TAH 2/6/15 DATE
PRINTED BY:	dmumma Feb 03, 2015
PORT ADDRESS:	ONE SITCUM PLAZA TACOMA, WA 98401-1837
DRAWING SCALE:	AS NOTED

PIER 4 PHASE 1
REMOVAL ACTION PROJECT
PILE EXTRACTION PLAN - SHEET 2

TOWNSHIP: 21N	RANGE: 3E	SECTION: 27	
DAT-HRZ: WA83-SF	VERT: MLLW 19.39' @ Tide 22 1933		
PARCEL:			

D3.2
SH 20 OF 54

CONT/CONS:	069982
M. ID:	091452
PHASE:	BID

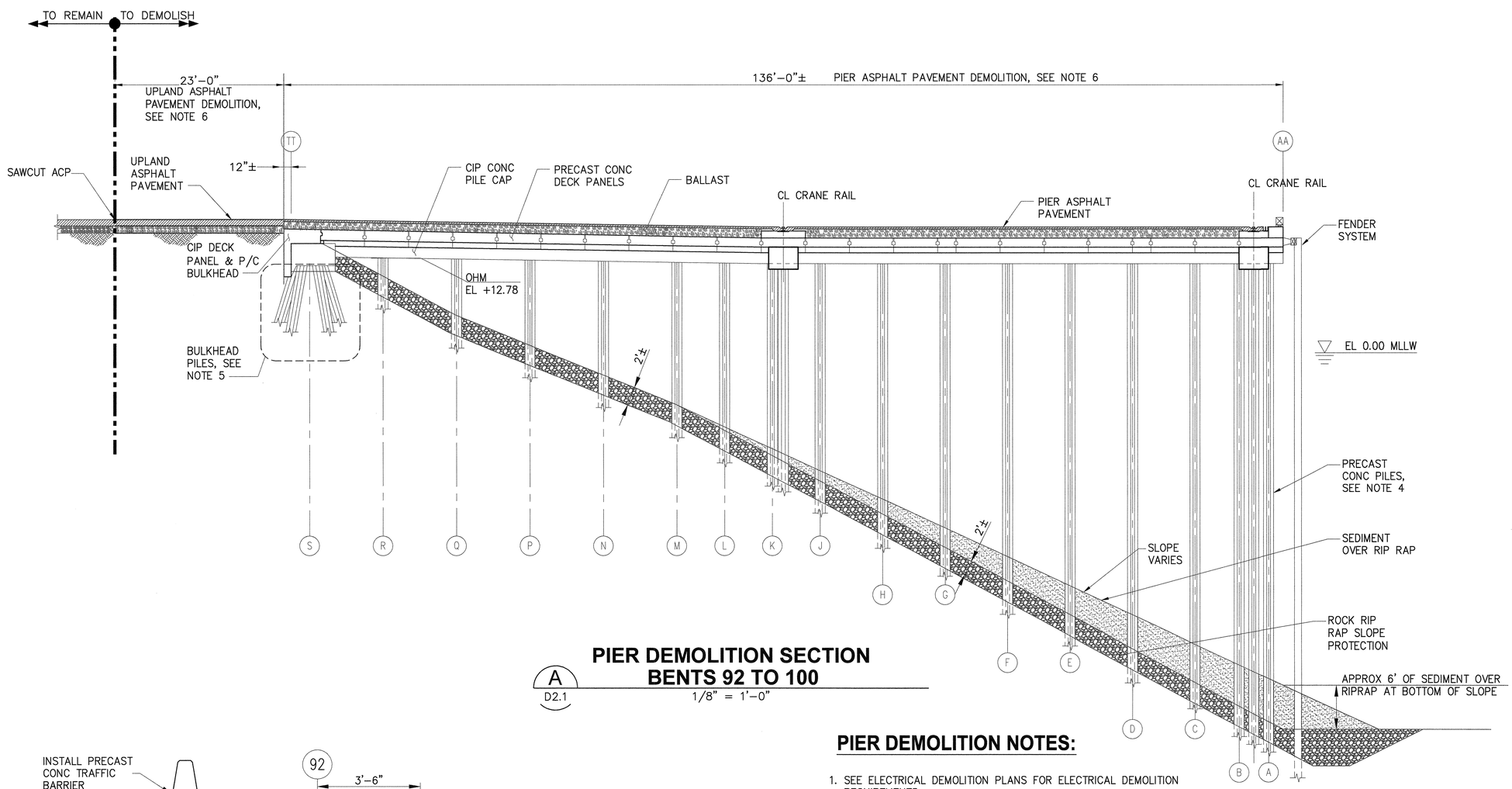

A / D2.1 PIER DEMOLITION SECTION BENTS 92 TO 100

1/8" = 1'-0"

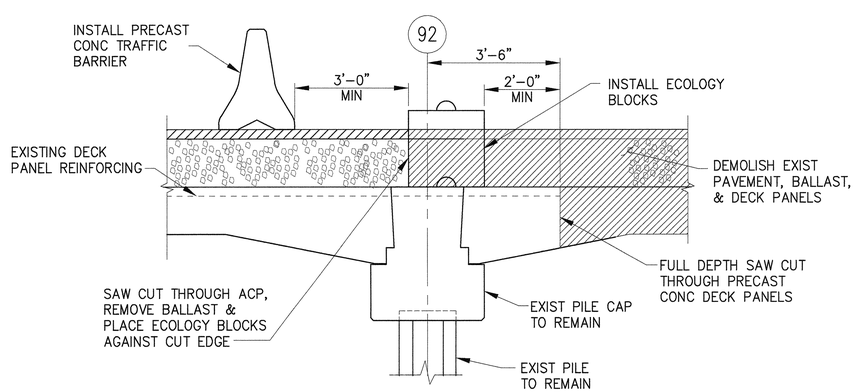

B / D2.1 PIER DECK DEMOLITION PLAN

1/2"=1'-0"

PIER DEMOLITION NOTES:

1. SEE ELECTRICAL DEMOLITION PLANS FOR ELECTRICAL DEMOLITION REQUIREMENTS.
2. INFORMATION REGARDING EXISTING CONDITIONS DEPICTED HEREIN WAS OBTAINED FROM RECORD DRAWINGS PROVIDED BY PORT OF TACOMA. CONTRACTOR SHALL REVIEW REFERENCE DRAWINGS AND VERIFY ALL EXISTING CONDITIONS IN THE FIELD, SEE SPECIFICATION.
3. DEMOLISH AND REMOVE EVERYTHING WITHIN DEMOLITION LIMITS SHOWN, INCLUDING BUT NOT LIMITED TO EXISTING PAVING, BALLAST, DECK PANELS, PILE CAPS, FENDERS, BOLLARDS, CRANE RAIL, AND CONCRETE STRUCTURE, UNLESS NOTED OTHERWISE.
4. EXTRACTION OF ALL PILES OTHER THAN BULKHEAD PILES IS SUBJECT TO TIMING RESTRICTIONS INDICATED IN THE SPECIFICATIONS.
5. EXTRACTION OF BULKHEAD PILES MAY OCCUR AT ANY TIME DURING THE CONTRACT.
6. ASPHALT PAVEMENT THICKNESS HAS NOT BEEN VERIFIED. RECORD DRAWINGS INDICATE EXISTING PIER ASPHALT THICKNESS TO BE 3"± AND EXISTING UPLAND ASPHALT TO BE 10"± THICKNESS

0 8 16 24
SCALE: 1/8"=1'-0"

Port of Tacoma
P.O. BOX 1837 TACOMA, WA 98401 (253)383-5841

kpff
2407 North 31st Street, Suite 100
Tacoma, Washington 98407
(253) 396-0150 Fax (253) 396-0162

MARK:	REVISION:	BY:	APPR:	DATE:

STATE OF WASHINGTON JOHN E. KOLESAR 38336 REGISTERED PROFESSIONAL ENGINEER
2-6-15

	SEK	2/6/15
	CHECKED BY	DATE
	TAH	2/6/15
	PROJ. ENGR	DATE

APPROVED: 2-6-15
DIRECTOR ENG. DATE

PRINTED BY: dmumma Feb 05, 2015
PORT ADDRESS: ONE SITCUM PLAZA TACOMA, WA 98401-1837

PIER 4 PHASE 1
REMOVAL ACTION PROJECT
PIER DEMOLITION SECTIONS - SHEET 1

D4.1
SH 21 OF 54

CONT/CONS: 069982	TOWNSHIP: 21N	RANGE: 3E	SECTION: 27
M. ID: 091452	DAT-HRZ: WA83-SF	VERT: MLLW 19.39' @ Tide 22 1933	
PHASE: BID	PARCEL:	DRAWING SCALE: AS NOTED	

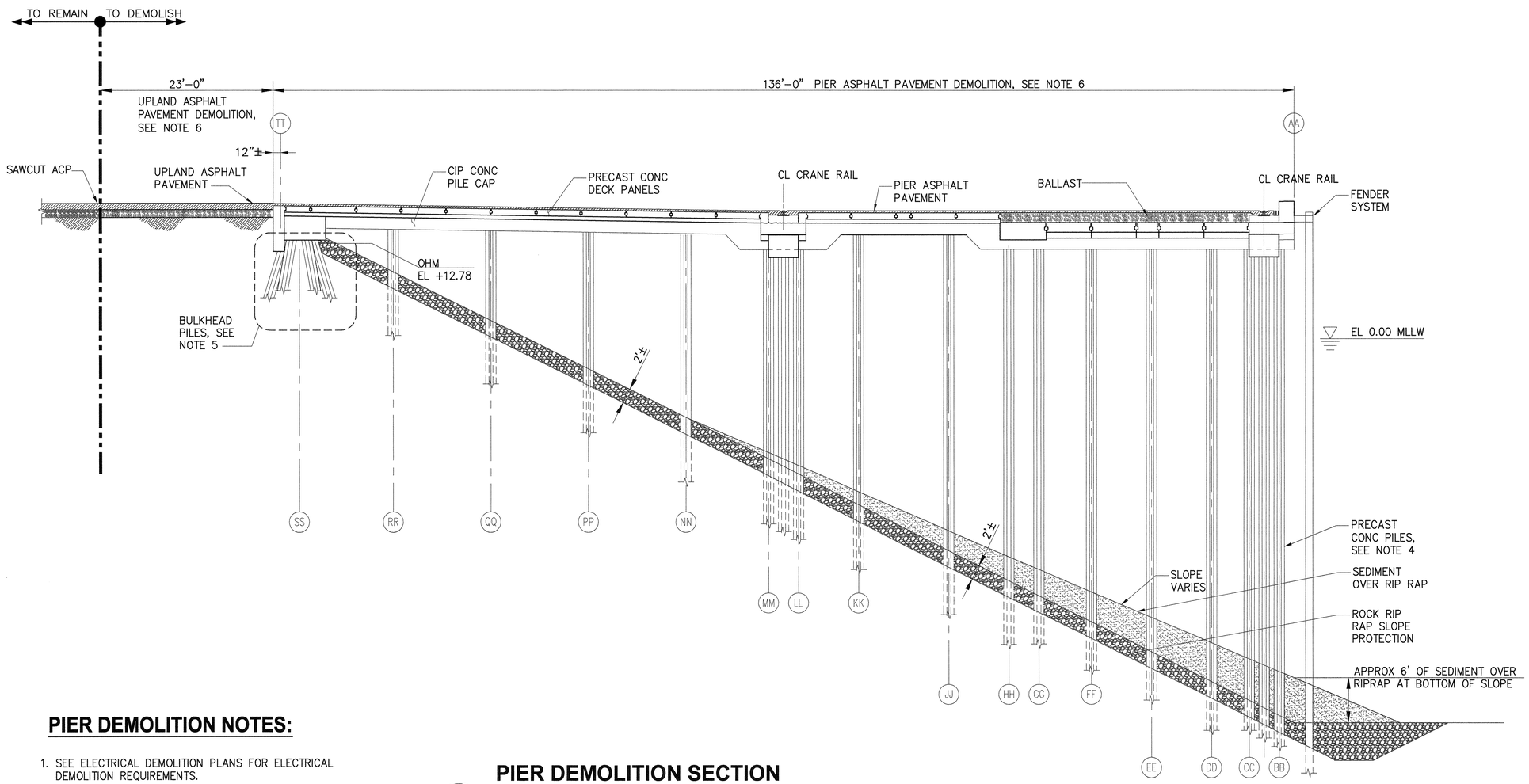

PIER DEMOLITION SECTION
BENTS 101 TO 144

A
D2.1, D2.2

1/8" = 1'–0"

PIER DEMOLITION NOTES:

1. SEE ELECTRICAL DEMOLITION PLANS FOR ELECTRICAL DEMOLITION REQUIREMENTS.
2. INFORMATION REGARDING EXISTING CONDITIONS DEPICTED HEREIN WAS OBTAINED FROM RECORD DRAWINGS PROVIDED BY PORT OF TACOMA. CONTRACTOR SHALL REVIEW REFERENCE DRAWINGS AND VERIFY ALL EXISTING CONDITIONS IN THE FIELD, SEE SPECIFICATIONS.
3. DEMOLISH AND REMOVE EVERYTHING WITHIN DEMOLITION LIMITS SHOWN, INCLUDING BUT NOT LIMITED TO EXISTING PAVING, BALLAST, DECK PANELS, PILE CAPS, FENDERS, BOLLARDS, CRANE RAIL, AND CONCRETE STRUCTURE, UNLESS NOTED OTHERWISE.
4. EXTRACTION OF ALL PILES OTHER THAN BULKHEAD PILES IS SUBJECT TO TIMING RESTRICTIONS INDICATED IN THE SPECIFICATIONS.
5. EXTRACTION OF BULKHEAD PILES MAY OCCUR AT ANY TIME DURING THE CONTRACT.
6. ASPHALT PAVEMENT THICKNESS HAS NOT BEEN VERIFIED. RECORD DRAWINGS INDICATE EXISTING PIER ASPHALT THICKNESS TO BE 3"± AND EXISTING UPLAND ASPHALT THICKNESS TO BE 10"±.

0 8 16 24
SCALE: 1/8"=1'–0"

Port of Tacoma
P.O. BOX 1837 TACOMA, WA 98401 (253)383-5841

kpff
2407 North 31st Street, Suite 100
Tacoma, Washington 98407
(253) 396-0150 Fax (253) 396-0162

MARK:	REVISION:	BY:	APPR:	DATE:

STATE OF WASHINGTON 28536 STEVEN E. MUELLEBACH REGISTERED PROFESSIONAL ENGINEER
2-6-15

APPROVED: 2-6-15
DIRECTOR ENG. DATE

SEK 2/6/15
CHECKED BY DATE
TAH 2/6/15
PROJ. ENGR DATE
PRINTED BY: dmumma Feb 05, 2015
PORT ADDRESS: ONE SITCUM PLAZA TACOMA, WA 98401–1837

PIER 4 PHASE 1
REMOVAL ACTION PROJECT
PIER DEMOLITION SECTIONS - SHEET 2

D4.2
SH 22 OF 54

CONT/CONS: 069982	TOWNSHIP: 21N	RANGE: 3E	SECTION: 27
M. ID: 091452	DAT–HRZ: WA83–SF	VERT: MLLW 19.39' @ Tide 22 1933	
PHASE: BID	PARCEL:	DRAWING SCALE: AS NOTED	

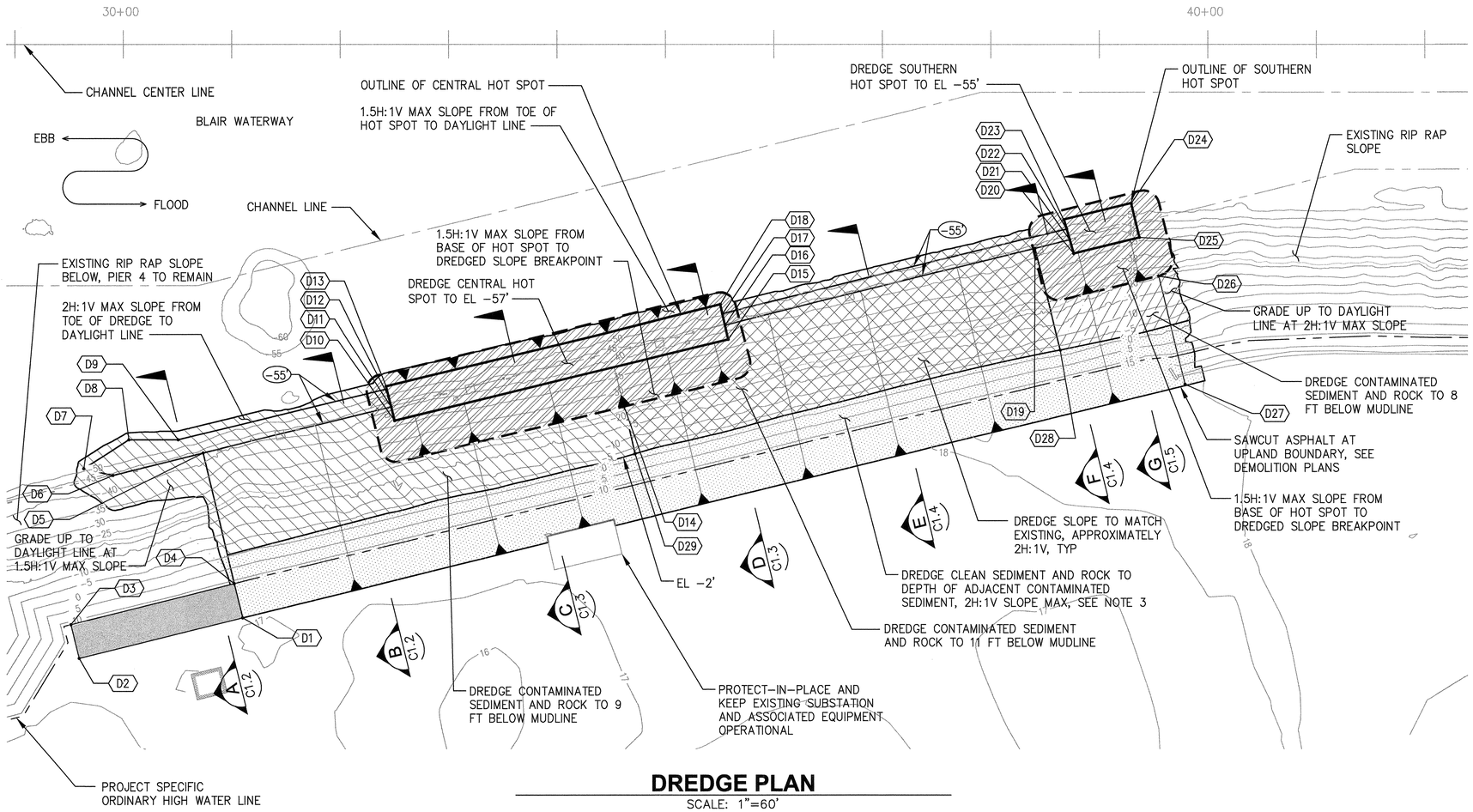

DREDGE PLAN

SCALE: 1"=60'

NOTES

1. DREDGING SHALL NOT EXTEND BEYOND LIMITS SHOWN.
2. CONTRACTOR SHALL COORDINATE ALL DREDGING ACTIVITIES AND SCHEDULE WITH THE PORT AND EXISTING TERMINAL OPERATORS.
3. IN CLEAN MATERIAL DREDGE AREA REMOVE CLEAN RIP RAP FROM SLOPE PRIOR TO DREDGING SEDIMENT. TRANSPORT RIP RAP TO UPLANDS FOR DISPOSAL OR REUSE.
4. ALL CLEAN SEDIMENT (NOT INCLUDING RIP RAP) SHALL BE DISPOSED OF AT THE COMMENCEMENT BAY OPEN WATER DISPOSAL SITE AND IN ACCORDANCE WITH ALL APPLICABLE REGULATIONS. REFER TO SPECIFICATIONS FOR HANDLING, PROTECTIVE MEASURES. FOR DISPOSAL SITE LOCATION SEE 1/C1.5
5. ALL CONTAMINATED SEDIMENT AND ROCK SHALL BE TRANSPORTED TO AND TREATED AT THE TRANSLOAD FACILITY IN ACCORDANCE WITH ALL APPLICABLE REGULATIONS. REFER TO TRANSLOAD FACILITY PLAN AND THE SPECIFICATIONS FOR HANDLING, PROTECTIVE MEASURES, TREATMENT DEWATERING AND DISPOSAL REQUIREMENTS.
6. A MULTI-PASS APPROACH SHALL BE USED FOR DREDGING OF CONTAMINATED MATERIALS. AN ADDITIONAL DREDGE PASS IS REQUIRED FOR DREDGING WITHIN THE OUTLINE OF THE HOT SPOTS. SEE SPECIFICATIONS.
7. SAWCUT AND DEMOLISH ASPHALT AND EXCAVATE (MINIMUM 2H:1V SLOPE) AS REQUIRED TO DEMOLISH THE EXISTING BULKHEAD.
8. SEE SPECIFICATIONS FOR ADDITIONAL DREDGING AND DISPOSAL REQUIREMENTS.

LEGEND

- EXISTING CONTOUR
- TOE OF DREDGE
- DREDGE CONTROL POINTS
- DREDGE SLOPE
- INDICATES EXTENT OF CONTAMINATED SEDIMENT DREDGING, DREDGE CONTAMINATED SEDIMENT AND RIP RAP TO 9FT BELOW MUDLINE, SEE NOTE 5
- INDICATES EXTENT OF CONTAMINATED SEDIMENT DREDGING, DREDGE CONTAMINATED SEDIMENT AND RIP RAP TO 11FT BELOW MUDLINE, SEE NOTE 5
- INDICATES EXTENT OF CONTAMINATED SEDIMENT DREDGING, DREDGE CONTAMINATED SEDIMENT AND RIP RAP TO 8FT BELOW MUDLINE, SEE NOTE 5
- INDICATES EXTENT OF CLEAN SEDIMENT DREDGING, DREDGE CLEAN SEDIMENT AND RIP RAP TO SAME DREDGE DEPTH AS ADJACENT CONTAMINATED SEDIMENT AND RIP RAP. DEPTH VARIES 8 FT TO 11 FT, SEE NOTES 3 AND 4
- INDICATES EXTENT OF CONTAMINATED HOT SPOT DREDGING, DREDGE DEPTH AND SIZE INDICATED IN PLAN AND SECTION. DREDGING WITHIN THIS AREA SHALL OCCUR WITHIN THE CONFINES OF A PARTIAL DEPTH IMPERMEABLE SILT CURTAIN. SEE SPECIFICATIONS.
- EXCAVATION, SEE NOTE 7
- PROJECT SPECIFIC OHWL (+12.78)
- APPROXIMATE OUTLINE OF DREDGED SLOPE BREAKPOINT FOR HOT SPOT DREDGING

DREDGE CONTROL POINTS

POINT ID	NORTHING	EASTING
D1	713152.79	1166642.74
D2	713231.01	1166508.54
D3	713258.70	1166524.68
D4	713180.77	1166659.10
D5	713286.19	1166721.50
D6	713329.49	1166647.52
D7	713352.58	1166632.50
D8	713342.43	1166680.58
D9	713310.77	1166713.24
D10	713184.68	1166868.96
D11	713196.01	1166875.57
D12	713204.74	1166880.67
D13	713212.91	1166885.44
D14	713046.76	1167030.02
D15	713024.62	1167142.41
D16	713035.80	1167149.30
D17	713044.72	1167154.55

DREDGE CONTROL POINTS CONT'D

POINT ID	NORTHING	EASTING
D18	713052.29	1167158.97
D19	712887.18	1167403.23
D20	712858.93	1167425.58
D21	712870.47	1167431.77
D22	712879.75	1167436.74
D23	712887.99	1167440.82
D24	712855.44	1167496.05
D25	712827.39	1167479.42
D26	712789.44	1167467.20
D27	712701.52	1167415.72
D28	712804.42	1167355.30
D29	713008.45	1167006.95

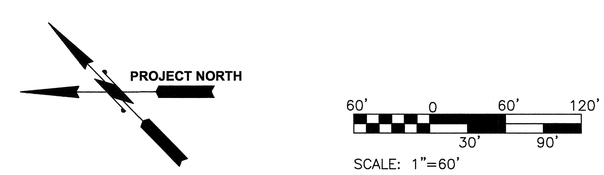

SCALE: 1"=60'

Port of Tacoma
P.O. BOX 1837 TACOMA, WA 98401 (253)383-5841

kpff
2407 North 31st Street, Suite 100
Tacoma, Washington 98407
(253) 396-0150 Fax (253) 396-0162

MARK:	REVISION:	BY:	APPR:	DATE:

STATE OF WASHINGTON
MADE KINGSLEY
46425
REGISTERED PROFESSIONAL ENGINEER

	SWK	2/6/2015
	CHECKED BY	DATE
	MDK	2/6/2015
	PROJ. ENGR	DATE
APPROVED:	2-6-15	
	DIRECTOR ENG.	DATE

PRINTED BY: sstainer Feb 05, 2015
PORT ADDRESS: ONE SITCUM PLAZA TACOMA, WA 98401-1837

PIER 4 PHASE 1
REMOVAL ACTION PROJECT
DREDGE PLAN

TOWNSHIP: 21N	RANGE: 3E	SECTION: 27	
DAT-HRZ: WA83-SF	VERT: MLLW 19.39' @ Tide 22.1933		
PARCEL:	DRAWING SCALE: AS NOTED		

C1.1
SH 23 OF 54

CONT/CONS: 069982	
M. ID: 091452	
PHASE: BID	

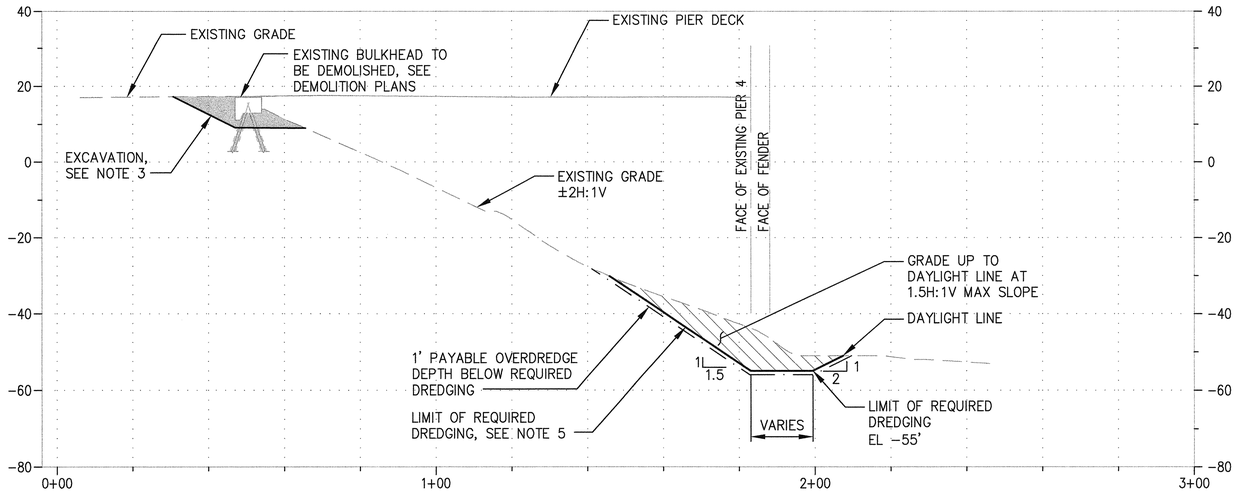

A DREDGE SECTION

C1.1 SCALE: 1"=20'

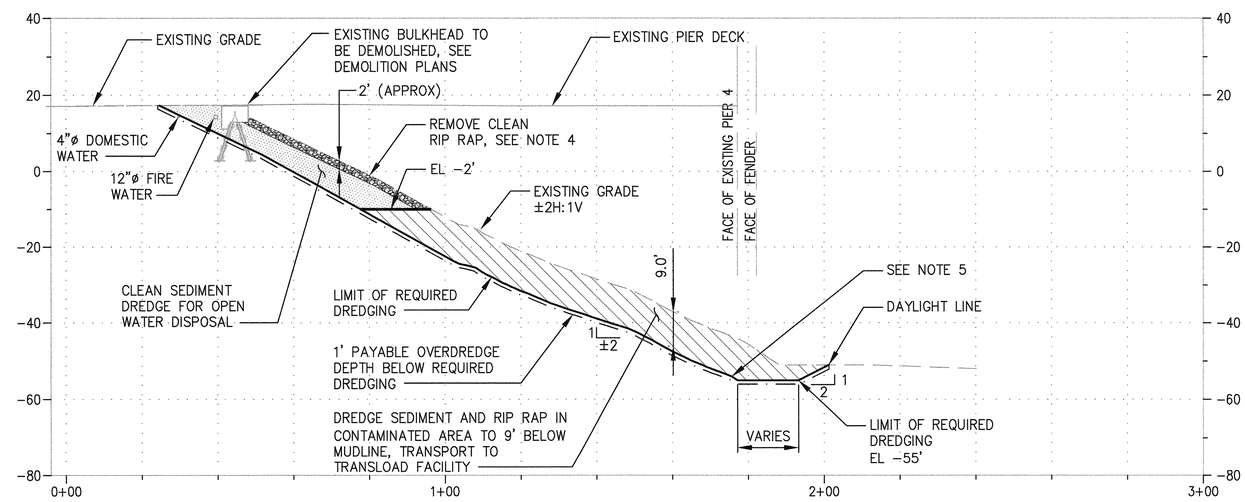

B DREDGE SECTION

C1.1 SCALE: 1"=20'

NOTES

1. DEMOLISH ALL UTILITIES WITHIN THE LIMITS OF DREDGE, SEE UTILITY AND SITE DEMOLITION PLANS.
2. CONTRACTOR SHALL PROTECT-IN-PLACE AND KEEP EXISTING SUBSTATION AND ASSOCIATED EQUIPMENT OPERATIONAL.
3. EXCAVATE (MINIMUM 2H:1V SLOPE) AS REQUIRED TO DEMOLISH AND REMOVE THE EXISTING BULKHEAD, APPROX BOTTOM EL +12' MLLW..
4. IN CLEAN MATERIAL DREDGE AREA (ABOVE EL -2' MLLW) REMOVE CLEAN RIP RAP FROM SLOPE PRIOR TO DREDGING AND TRANSPORT TO UPLANDS FOR DISPOSAL OR REUSE. IN THE CONTAMINATED SEDIMENT DREDGE AREA (BELOW EL -2' MLLW) REMOVE RIP RAP ALONG WITH SEDIMENT AND TRANSPORT TO TRANSLOAD FACILITY.
5. 1.5H TO 1V IS PREDICTED AS THE STEEPEST SLOPE THAT THE DREDGE CUT WILL MAINTAIN.
6. RIP RAP WITHIN CONTAMINATED DREDGING AREA NOT SHOWN, SEE D4.1 AND D4.2 FOR ADDITIONAL INFORMATION.

LEGEND

- INDICATES EXTENT OF CONTAMINATED SEDIMENT DREDGING, DREDGE CONTAMINATED SEDIMENT AND RIP RAP TO 9FT BELOW MUDLINE, SEE NOTE 5
- INDICATES EXTENT OF CONTAMINATED SEDIMENT DREDGING, DREDGE CONTAMINATED SEDIMENT AND RIP RAP TO 11FT BELOW MUDLINE, SEE NOTE 5
- INDICATES EXTENT OF CONTAMINATED SEDIMENT DREDGING, DREDGE CONTAMINATED SEDIMENT AND RIP RAP TO 8FT BELOW MUDLINE, SEE NOTE 5
- INDICATES EXTENT OF CLEAN SEDIMENT DREDGING, DREDGE CLEAN SEDIMENT AND RIP RAP TO SAME DREDGE DEPTH AS ADJACENT CONTAMINATED SEDIMENT AND RIP RAP. DEPTH VARIES 8 FT TO 11 FT, SEE NOTES 3 AND 4
- INDICATES EXTENT OF CONTAMINATED HOT SPOT DREDGING, DREDGE DEPTH AND SIZE INDICATED IN PLAN AND SECTION. DREDGING WITHIN THIS AREA SHALL OCCUR WITHIN THE CONFINES OF A PARTIAL DEPTH IMPERMEABLE SILT CURTAIN. SEE SPECIFICATIONS.
- INDICATES RIP RAP IN CLEAN MATERIAL DREDGE AREA. RIP RAP IN CONTAMINATED DREDGE AREA NOT SHOWN.
- EXCAVATION

20' 0 20' 40'
10' 30'
SCALE: 1"=20'

Port of Tacoma
P.O. BOX 1837 TACOMA, WA 98401 (253)383-5841

kpff
2407 North 31st Street, Suite 100
Tacoma, Washington 98407
(253) 396-0150 Fax (253) 396-0162

MARK:	REVISION:	BY:	APPR:	DATE:

STATE OF WASHINGTON MADE KINGSLEY 40125 REGISTERED PROFESSIONAL ENGINEER

	SWK	2/6/2015
	CHECKED BY	DATE
	MDK	2/6/2015
	PROJ. ENGR	DATE

APPROVED: 2-6-15
DIRECTOR ENG. DATE

PRINTED BY: sstainer Feb 05, 2015
PORT ADDRESS: ONE SITCUM PLAZA TACOMA, WA 98401-1837

PIER 4 PHASE 1
REMOVAL ACTION PROJECT
DREDGE SECTIONS - SHEET 1

C1.2
SH 24 OF 54

CONT/CONS: 069982	TOWNSHIP: 21N	RANGE: 3E	SECTION: 27
M. ID: 091452	DAT-HRZ: WA83-SF	VERT: MLLW 19.39' @ Tide 22 1933	
PHASE: BID	PARCEL:	DRAWING SCALE: AS NOTED	

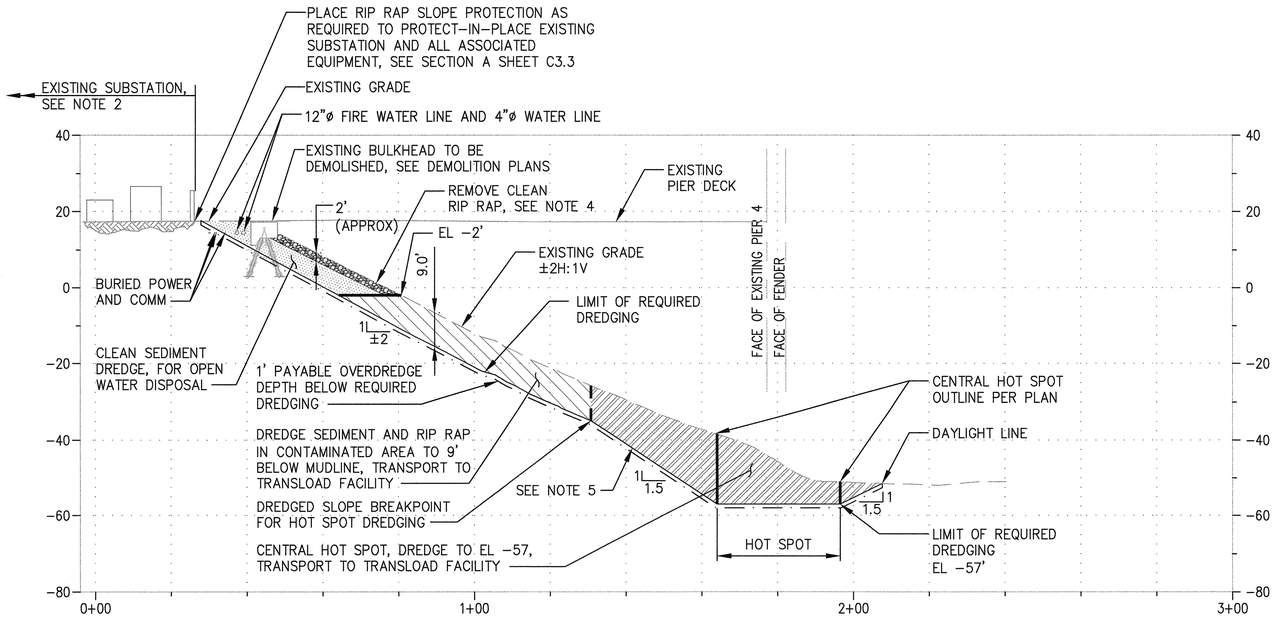

DREDGE SECTION THRU CENTRAL HOT SPOT

C / C1.1

SCALE: 1"=20'

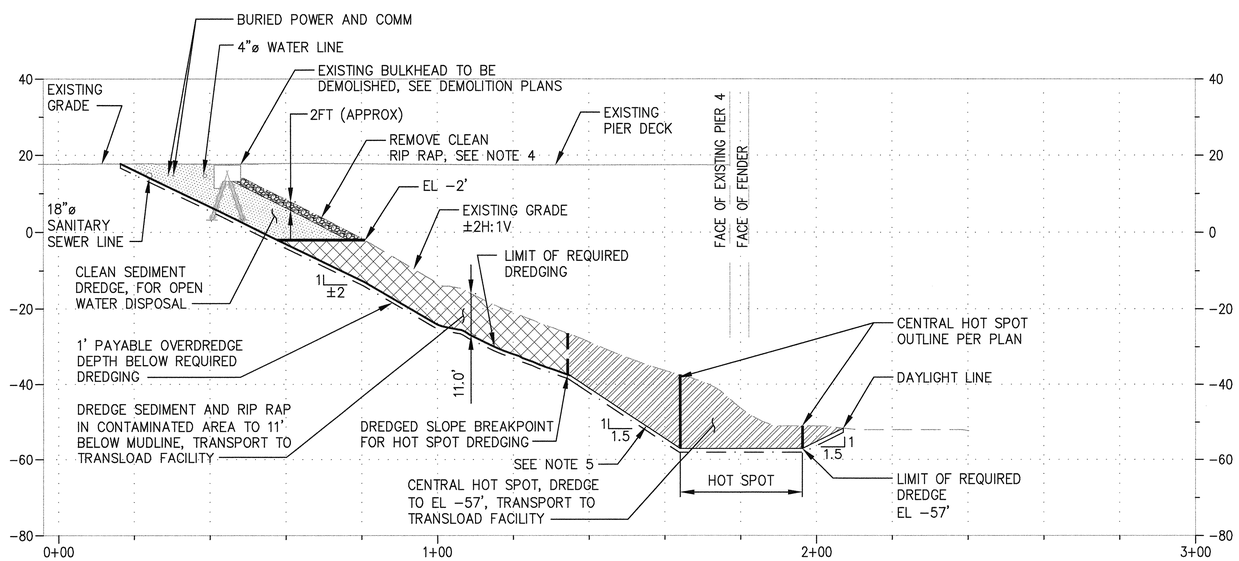

DREDGE SECTION THRU CENTRAL HOT SPOT

D / C1.1

SCALE: 1"=20'

NOTES

1. DEMOLISH ALL UTILITIES WITHIN THE LIMITS OF DREDGE, SEE UTILITY AND SITE DEMOLITION PLANS.
2. CONTRACTOR SHALL PROTECT-IN-PLACE AND KEEP EXISTING SUBSTATION AND ASSOCIATED EQUIPMENT OPERATIONAL.
3. EXCAVATE (MINIMUM 2H:1V SLOPE) AS REQUIRED TO DEMOLISH AND REMOVE THE EXISTING BULKHEAD, APPROX BOTTOM EL +12' MLLW..
4. IN CLEAN MATERIAL DREDGE AREA (ABOVE EL -2' MLLW) REMOVE CLEAN RIP RAP FROM SLOPE PRIOR TO DREDGING AND TRANSPORT TO UPLANDS FOR DISPOSAL OR REUSE. IN THE CONTAMINATED SEDIMENT DREDGE AREA (BELOW EL -2' MLLW) REMOVE RIP RAP ALONG WITH SEDIMENT AND TRANSPORT TO TRANSLOAD FACILITY.
5. 1.5H TO 1V IS PREDICTED AS THE STEEPEST SLOPE THAT THE DREDGE CUT WILL MAINTAIN.
6. RIP RAP WITHIN CONTAMINATED DREDGING AREA NOT SHOWN, SEE D4.1 AND D4.2 FOR ADDITIONAL INFORMATION.

LEGEND

- INDICATES EXTENT OF CONTAMINATED SEDIMENT DREDGING, DREDGE CONTAMINATED SEDIMENT AND RIP RAP TO 9FT BELOW MUDLINE, SEE NOTE 5
- INDICATES EXTENT OF CONTAMINATED SEDIMENT DREDGING, DREDGE CONTAMINATED SEDIMENT AND RIP RAP TO 11FT BELOW MUDLINE, SEE NOTE 5
- INDICATES EXTENT OF CONTAMINATED SEDIMENT DREDGING, DREDGE CONTAMINATED SEDIMENT AND RIP RAP TO 8FT BELOW MUDLINE, SEE NOTE 5
- INDICATES EXTENT OF CLEAN SEDIMENT DREDGING, DREDGE CLEAN SEDIMENT AND RIP RAP TO SAME DREDGE DEPTH AS ADJACENT CONTAMINATED SEDIMENT AND RIP RAP. DEPTH VARIES 8 FT TO 11 FT, SEE NOTES 3 AND 4
- INDICATES EXTENT OF CONTAMINATED HOT SPOT DREDGING, DREDGE DEPTH AND SIZE INDICATED IN PLAN AND SECTION. DREDGING WITHIN THIS AREA SHALL OCCUR WITHIN THE CONFINES OF A PARTIAL DEPTH IMPERMEABLE SILT CURTAIN. SEE SPECIFICATIONS.
- INDICATES RIP RAP IN CLEAN MATERIAL DREDGE AREA. RIP RAP IN CONTAMINATED DREDGE AREA NOT SHOWN.
- EXCAVATION

20' 0 20' 40'
10' 30'
SCALE: 1"=20'

Port of Tacoma
P.O. BOX 1837 TACOMA, WA 98401 (253)383-5841

kpff
2407 North 31st Street, Suite 100
Tacoma, Washington 98407
(253) 396-0150 Fax (253) 396-0162

MARK:	REVISION:	BY:	APPR:	DATE:

WADE KINGSBURY STATE OF WASHINGTON 21425 REGISTERED PROFESSIONAL ENGINEER 2/6/15

APPROVED: 2-6-15
DIRECTOR ENG. DATE

SWK	2/6/2015		
CHECKED BY	DATE		
MDK	2/6/2015		
PROJ. ENGR	DATE		

PRINTED BY: sstainer Feb 05, 2015
PORT ADDRESS: ONE SITCUM PLAZA TACOMA, WA 98401-1837

PIER 4 PHASE 1
REMOVAL ACTION PROJECT
DREDGE SECTIONS - SHEET 2

TOWNSHIP: 21N	RANGE: 3E	SECTION: 27	
DAT-HRZ: WA83-SF	VERT: MLLW 19.39' @ Tide 22 1933		
PARCEL:	DRAWING SCALE: AS NOTED		

C1.3
SH 25 OF 54

CONT/CONS: 069982	
M. ID: 091452	
PHASE: BID	

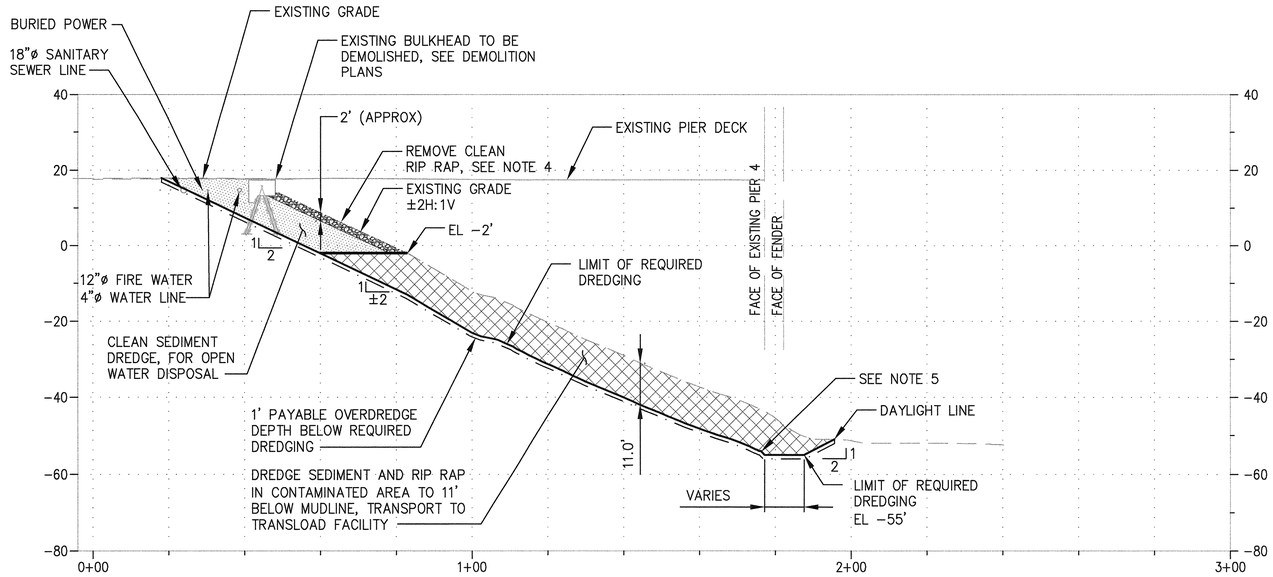

E DREDGE SECTION

C1.1 SCALE: 1"=20'

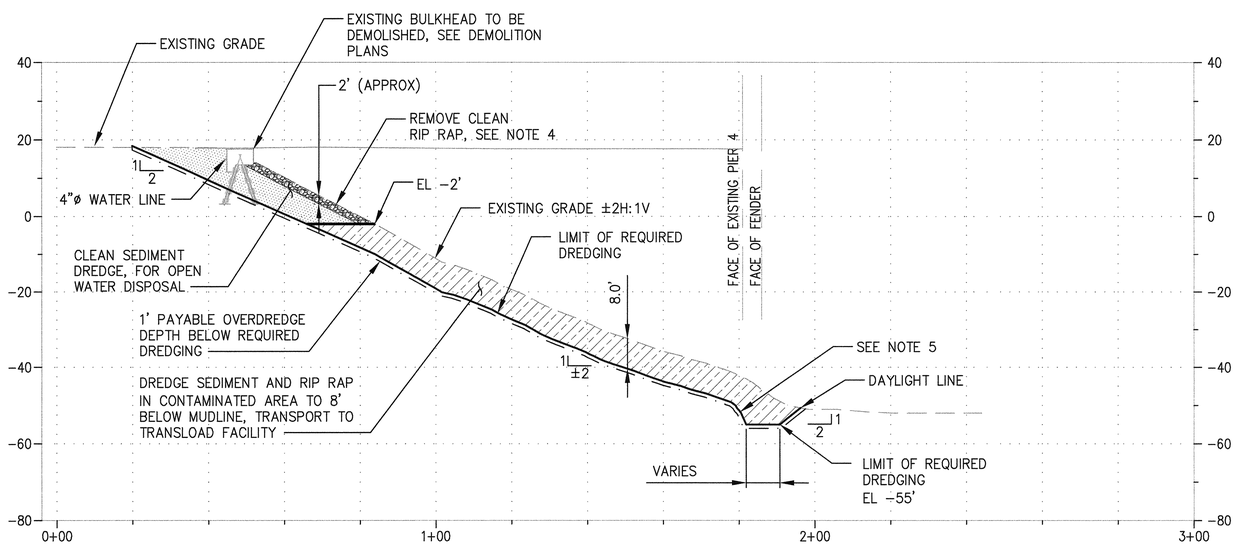

F DREDGE SECTION

C1.1 SCALE: 1"=20'

NOTES

1. DEMOLISH ALL UTILITIES WITHIN THE LIMITS OF DREDGE, SEE UTILITY AND SITE DEMOLITION PLANS.
2. CONTRACTOR SHALL PROTECT–IN–PLACE AND KEEP EXISTING SUBSTATION AND ASSOCIATED EQUIPMENT OPERATIONAL.
3. EXCAVATE (MINIMUM 2H:1V SLOPE) AS REQUIRED TO DEMOLISH AND REMOVE THE EXISTING BULKHEAD, APPROX BOTTOM EL +12' MLLW..
4. IN CLEAN MATERIAL DREDGE AREA (ABOVE EL −2' MLLW) REMOVE CLEAN RIP RAP FROM SLOPE PRIOR TO DREDGING AND TRANSPORT TO UPLANDS FOR DISPOSAL OR REUSE. IN THE CONTAMINATED SEDIMENT DREDGE AREA (BELOW EL −2' MLLW) REMOVE RIP RAP ALONG WITH SEDIMENT AND TRANSPORT TO TRANSLOAD FACILITY.
5. 1.5H TO 1V IS PREDICTED AS THE STEEPEST SLOPE THAT THE DREDGE CUT WILL MAINTAIN.
6. RIP RAP WITHIN CONTAMINATED DREDGING AREA NOT SHOWN, SEE D4.1 AND D4.2 FOR ADDITIONAL INFORMATION.

LEGEND

- INDICATES EXTENT OF CONTAMINATED SEDIMENT DREDGING, DREDGE CONTAMINATED SEDIMENT AND RIP RAP TO 9FT BELOW MUDLINE, SEE NOTE 5
- INDICATES EXTENT OF CONTAMINATED SEDIMENT DREDGING, DREDGE CONTAMINATED SEDIMENT AND RIP RAP TO 11FT BELOW MUDLINE, SEE NOTE 5
- INDICATES EXTENT OF CONTAMINATED SEDIMENT DREDGING, DREDGE CONTAMINATED SEDIMENT AND RIP RAP TO 8FT BELOW MUDLINE, SEE NOTE 5
- INDICATES EXTENT OF CLEAN SEDIMENT DREDGING, DREDGE CLEAN SEDIMENT AND RIP RAP TO SAME DREDGE DEPTH AS ADJACENT CONTAMINATED SEDIMENT AND RIP RAP. DEPTH VARIES 8 FT TO 11 FT, SEE NOTES 3 AND 4
- INDICATES EXTENT OF CONTAMINATED HOT SPOT DREDGING, DREDGE DEPTH AND SIZE INDICATED IN PLAN AND SECTION. DREDGING WITHIN THIS AREA SHALL OCCUR WITHIN THE CONFINES OF A PARTIAL DEPTH IMPERMEABLE SILT CURTAIN. SEE SPECIFICATIONS.
- INDICATES RIP RAP IN CLEAN MATERIAL DREDGE AREA. RIP RAP IN CONTAMINATED DREDGE AREA NOT SHOWN.
- EXCAVATION

20' 0 20' 40'
10' 30'
SCALE: 1"=20'

Port of Tacoma
P.O. BOX 1837 TACOMA, WA 98401 (253)383-5841

kpff
2407 North 31st Street, Suite 100
Tacoma, Washington 98407
(253) 396-0150 Fax (253) 396-0162

MARK:	REVISION:	BY:	APPR:	DATE:

STATE OF WASHINGTON
MARK KINGSLEY
19625
REGISTERED PROFESSIONAL ENGINEER

SWK	CHECKED BY	2/6/2015 DATE
MDK	PROJ. ENGR	2/6/2015 DATE
PRINTED BY: sstainer Feb 05, 2015		
PORT ADDRESS: ONE SITCUM PLAZA, TACOMA, WA 98401–1837		

APPROVED: 2-6-15
DIRECTOR ENG. DATE

PIER 4 PHASE 1
REMOVAL ACTION PROJECT
DREDGE SECTIONS - SHEET 3

C1.4

SH 26 OF 54

CONT/CONS: 069982	TOWNSHIP: 21N	RANGE: 3E	SECTION: 27
M. ID: 091452	DAT–HRZ: WA83–SF	VERT: MLLW 19.39' @ Tide 22.1933	
PHASE: BID	PARCEL:	DRAWING SCALE: AS NOTED	

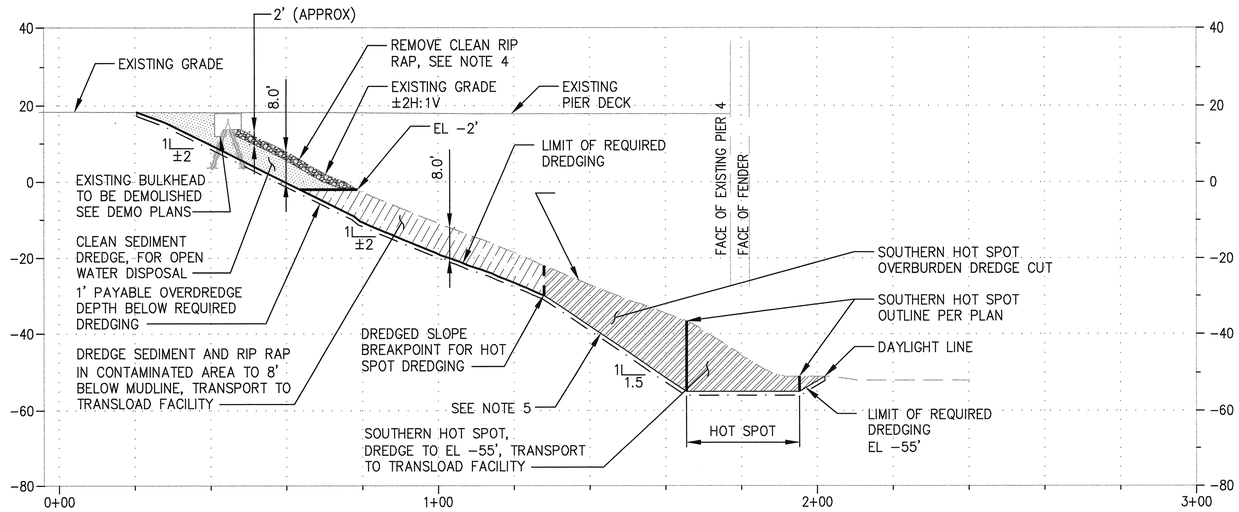

DREDGE SECTION THRU SOUTHERN HOT SPOT

G / C1.1

SCALE: 1"=20'

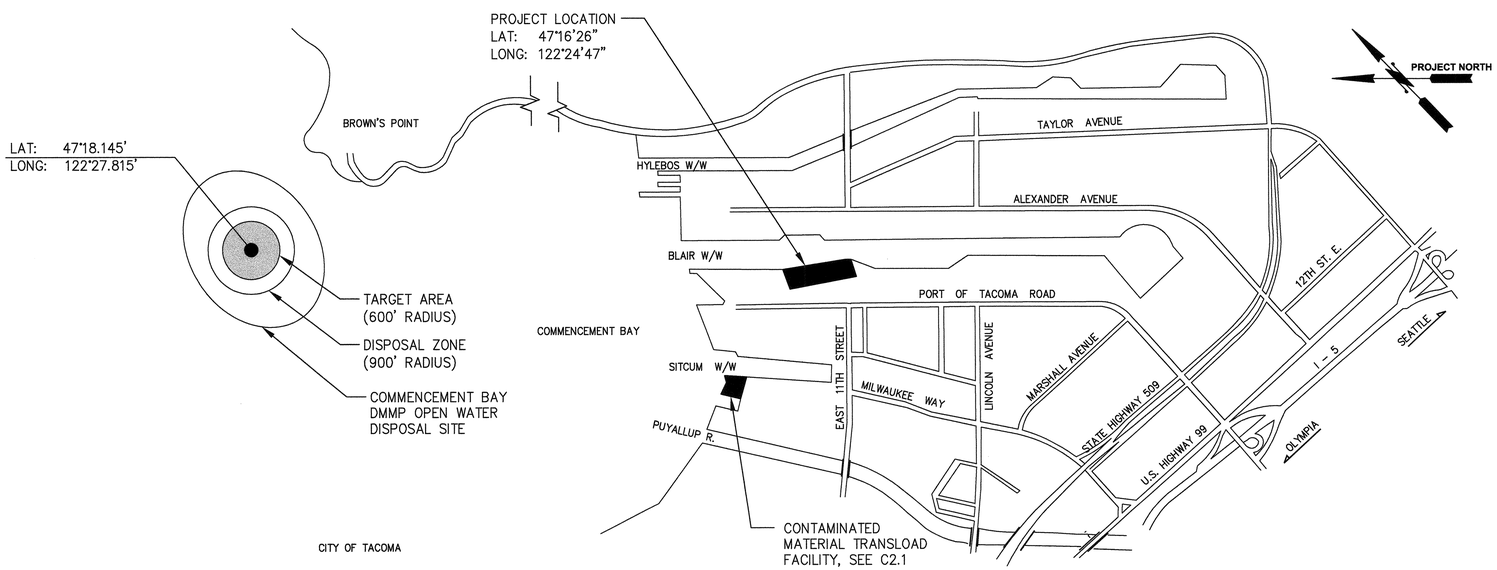

DMMP OPEN WATER DISPOSAL SITE

1 / C1.1

NTS

NOTES:

1. THE DMMP DISPOSAL SITE IS SHOWN CLOSER THAN THE ACTUAL SITE DISTANCE.

NOTES

1. DEMOLISH ALL UTILITIES WITHIN THE LIMITS OF DREDGE, SEE UTILITY AND SITE DEMOLITION PLANS.
2. CONTRACTOR SHALL PROTECT-IN-PLACE AND KEEP EXISTING SUBSTATION AND ASSOCIATED EQUIPMENT OPERATIONAL.
3. EXCAVATE (MINIMUM 2H:1V SLOPE) AS REQUIRED TO DEMOLISH AND REMOVE THE EXISTING BULKHEAD, APPROX BOTTOM EL +12' MLLW..
4. IN CLEAN MATERIAL DREDGE AREA (ABOVE EL -2' MLLW) REMOVE CLEAN RIP RAP FROM SLOPE PRIOR TO DREDGING AND TRANSPORT TO UPLANDS FOR DISPOSAL OR REUSE. IN THE CONTAMINATED SEDIMENT DREDGE AREA (BELOW EL -2' MLLW) REMOVE RIP RAP ALONG WITH SEDIMENT AND TRANSPORT TO TRANSLOAD FACILITY.
5. 1.5H TO 1V IS PREDICTED AS THE STEEPEST SLOPE THAT THE DREDGE CUT WILL MAINTAIN.
6. RIP RAP WITHIN CONTAMINATED DREDGING AREA NOT SHOWN, SEE D4.1 AND D4.2 FOR ADDITIONAL INFORMATION.

LEGEND

- INDICATES EXTENT OF CONTAMINATED SEDIMENT DREDGING, DREDGE CONTAMINATED SEDIMENT AND RIP RAP TO 9FT BELOW MUDLINE, SEE NOTE 5
- INDICATES EXTENT OF CONTAMINATED SEDIMENT DREDGING, DREDGE CONTAMINATED SEDIMENT AND RIP RAP TO 11FT BELOW MUDLINE, SEE NOTE 5
- INDICATES EXTENT OF CONTAMINATED SEDIMENT DREDGING, DREDGE CONTAMINATED SEDIMENT AND RIP RAP TO 8FT BELOW MUDLINE, SEE NOTE 5
- INDICATES EXTENT OF CLEAN SEDIMENT DREDGING, DREDGE CLEAN SEDIMENT AND RIP RAP TO SAME DREDGE DEPTH AS ADJACENT CONTAMINATED SEDIMENT AND RIP RAP. DEPTH VARIES 8 FT TO 11 FT, SEE NOTES 3 AND 4
- INDICATES EXTENT OF CONTAMINATED HOT SPOT DREDGING, DREDGE DEPTH AND SIZE INDICATED IN PLAN AND SECTION. DREDGING WITHIN THIS AREA SHALL OCCUR WITHIN THE CONFINES OF A PARTIAL DEPTH IMPERMEABLE SILT CURTAIN. SEE SPECIFICATIONS.
- INDICATES RIP RAP IN CLEAN MATERIAL DREDGE AREA. RIP RAP IN CONTAMINATED DREDGE AREA NOT SHOWN.
- EXCAVATION

20' 0 20' 40'
10' 30'
SCALE: 1"=20'

Port of Tacoma
P.O. BOX 1837 TACOMA, WA 98401 (253)383-5841

kpff
2407 North 31st Street, Suite 100
Tacoma, Washington 98407
(253) 396-0150 Fax (253) 396-0162

MARK:	REVISION:	BY:	APPR:	DATE:

STEVEN W. KINGSLEY, STATE OF WASHINGTON, REGISTERED PROFESSIONAL ENGINEER, 36425

PIER 4 PHASE 1
REMOVAL ACTION PROJECT
DREDGE SECTIONS - SHEET 4

APPROVED: 2-6-15
DIRECTOR ENG. DATE

SWK 2/6/2015
CHECKED BY DATE
MDK 2/6/2015
PROJ. ENGR DATE

PRINTED BY: sstainer Feb 05, 2015
PORT ADDRESS: ONE SITCUM PLAZA TACOMA, WA 98401-1837

C1.5
SH 27 OF 54

CONT/CONS: 069982	TOWNSHIP: 21N	RANGE: 3E	SECTION: 27
M. ID: 091452	DAT-HRZ: WA83-SF	VERT: MLLW 19.39' @ Tide 22 1933	
PHASE: BID	PARCEL:	DRAWING SCALE: AS NOTED	

BINDING EDGE

PORT OF TACOMA FILE: M:\2014\114096 POT Pier 4 Reconfiguration\Drawings\Current\Phase 1_091452\091452-C1.2-C1.5 (Dredge Sections - Sheet X)

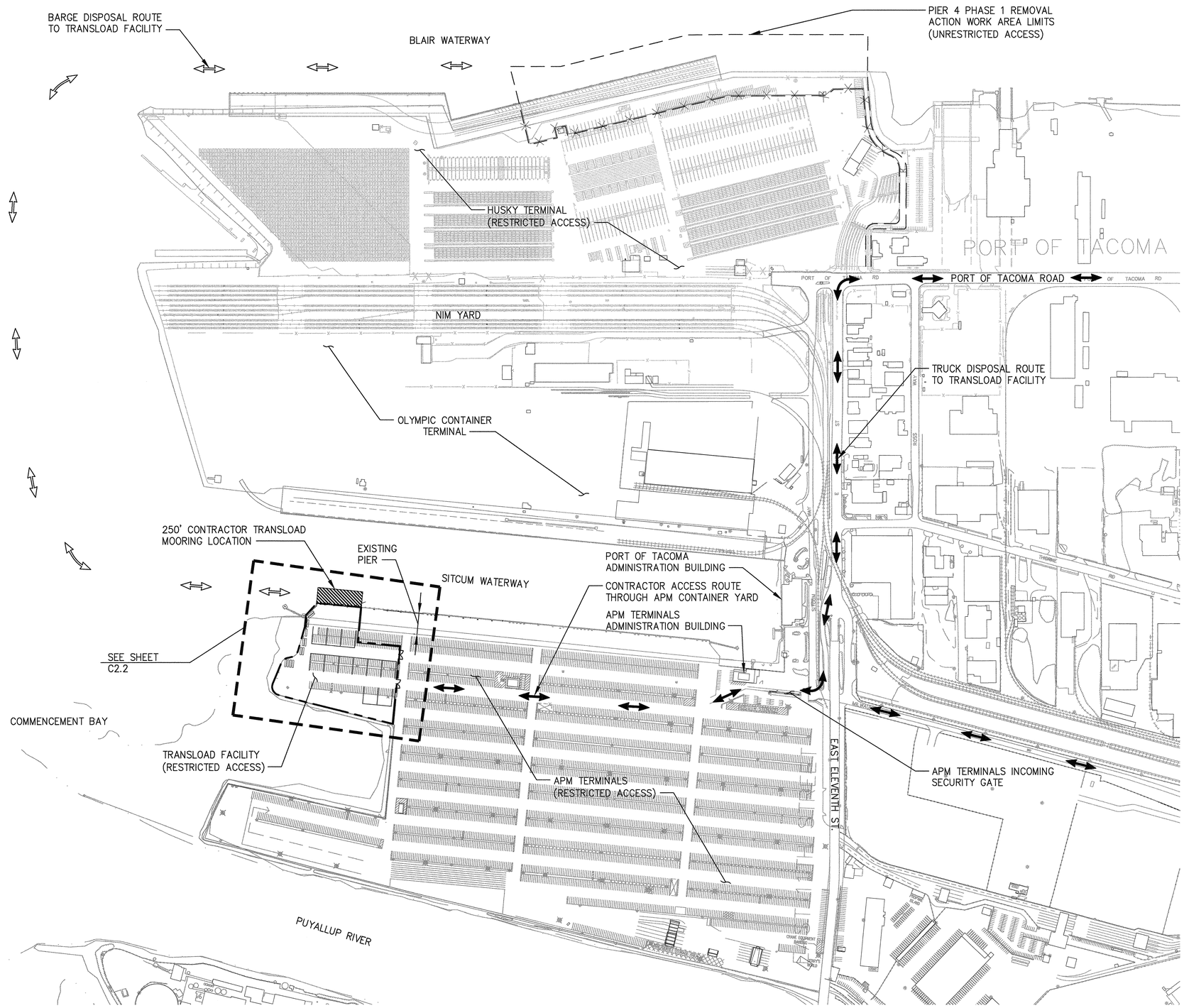

TRANSLOAD FACILITY PLAN

SCALE: 1"=300'

NOTES

1. ALL CONTAMINATED MATERIAL DREDGED AT THE PIER 4 SITE SHALL BE TRANSPORTED TO THE TRANSLOAD FACILITY LOCATED AS SHOWN WITHIN THE APM CONTAINER YARD. THE TRANSLOAD FACILITY SHALL BE USED TO PROCESS CONTAMINATED DREDGE MATERIAL FOR LANDFILL DISPOSAL. THE TRANSLOAD FACILITY SHALL BE DESIGNED, SET-UP, OPERATED, MAINTAINED, AND CLEANED UP BY THE CONTRACTOR PER THE CONTRACT DOCUMENTS.
2. SEE SPECIFICATIONS FOR ADDITIONAL INFORMATION AND REQUIREMENTS FOR TRANSLOADING.

LEGEND

- CONTRACTOR ACCESS ROUTE
- CONTRACTOR TRANSLOAD FACILITY BARGE ROUTE
- CONTRACTOR MOORING LOCATION TRANSLOAD FACILITY
- TRANSLOAD FACILITY LIMITS
- PIER 4 PHASE 1 WORK AREA LIMITS

PROJECT NORTH

300' 0 300' 600'
150' 450'
SCALE: 1"=300'

Port of Tacoma
P.O. BOX 1837 TACOMA, WA 98401 (253)383-5841

kpff
2407 North 31st Street, Suite 100
Tacoma, Washington 98407
(253) 396-0150 Fax (253) 396-0162

MARK:	REVISION:	BY:	APPR:	DATE:

GRADE ELLINGSBY STATE OF WASHINGTON 38278 REGISTERED PROFESSIONAL ENGINEER

SWK	CHECKED BY	2/6/2015 DATE
MDK	PROJ. ENGR	2/6/2015 DATE

APPROVED: 2-6-15
DIRECTOR ENG. DATE

PRINTED BY: kvang Feb 04, 2015
PORT ADDRESS: ONE SITCUM PLAZA
TACOMA, WA 98401-1837

PIER 4 PHASE 1 REMOVAL ACTION PROJECT

TRANSLOAD FACILITY LOCATION PLAN

C2.1

SH 28 OF 54

CONT/CONS: 069982	TOWNSHIP: 21N	RANGE: 3E	SECTION: 27
M. ID: 091452	DAT-HRZ: WA83-SF	VERT: MLLW 19.39' @ Tide 22 1933	
PHASE: BID	PARCEL:	DRAWING SCALE: AS NOTED	

BINDING EDGE

PORT OF TACOMA FILE: M:\2014\1114096.POT Pier 4 Reconfiguration\Drawings\Current\Phase 1_091452\091452-C2.1 (Transload Facility Plan)

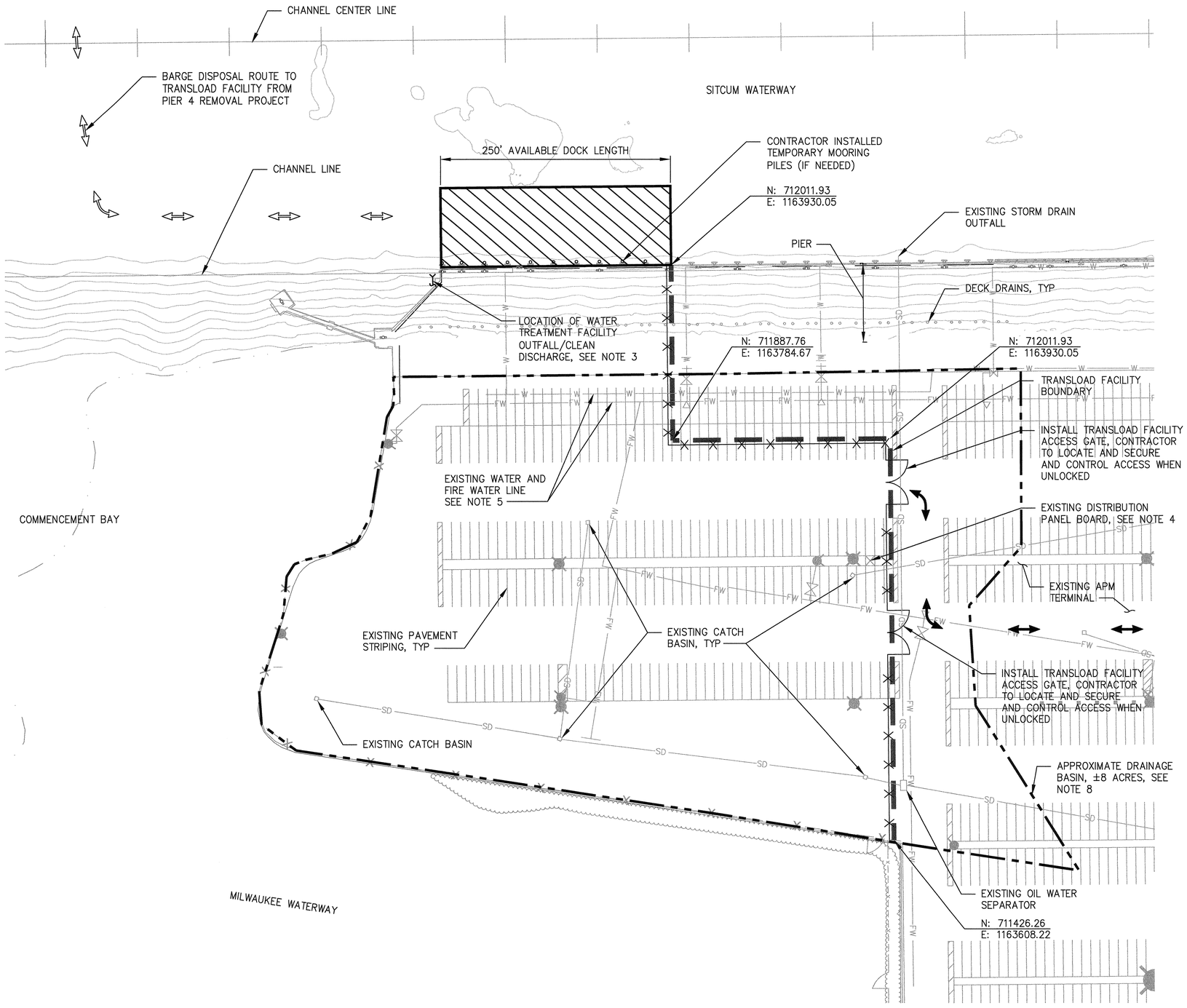

TRANSLOAD FACILITY PLAN

SCALE: 1"=60'

NOTES

1. APM TERMINAL IS A SECURED OPERATING TERMINAL. THE CONTRACTOR SHALL NOT INTERFERE WITH TERMINAL OPERATIONS.
2. CONTRACTOR SHALL STOCKPILE AND STAGE ALL EQUIPMENT, SUPPLIES AND MATERIALS WITHIN THE TRANSLOAD FACILITY BOUNDARY UNLESS NOTED OTHERWISE. WHEN CONTRACT WORK IS COMPLETE CONTRACTOR SHALL CLEAR AND CLEAN THE WORK AREA.
3. CONTRACTOR TO DETERMINE PIPE ROUTING ACROSS THE TRANSLOAD FACILITY FROM THE WATER TREATMENT FACILITY TO TEMPORARY OUTFALL LOCATION.
4. IF NECESSARY, CONTRACTOR SHALL CONSTRUCT A TEMPORARY POWER FEED FROM THE EXISTING DISTRIBUTION PANEL BOARD AND SHALL COORDINATE WITH APM TERMINALS AND THE PORT. THE EXISTING DISTRIBUTION PANEL BOARD IS RATED 600 AMPS, 480Y/277 VOLTS, SEE SPECIFICATIONS FOR ADDITIONAL REQUIREMENTS.
5. A FRESH WATER SYSTEM EXISTS WITHIN THE TRANSLOAD FACILITY BOUNDARY, CONTRACTOR SHALL COORDINATE WITH APM TERMINALS AND THE PORT IF A TEMPORARY WATER CONNECTION IS REQUIRED, SEE SPECIFICATIONS FOR ADDITIONAL REQUIREMENTS.
6. CONTRACTOR SHALL NOT PARK ANY EQUIPMENT OR PERSONAL VEHICLES OUTSIDE TRANSLOAD FACILITY.
7. TERMINAL TRAFFIC SHALL HAVE RIGHT-OF-WAY AT ALL TIMES.
8. CONTRACTOR SHALL COLLECT AND TREAT ALL SURFACE WATER GENERATED BOTH ON-SITE AS WELL AS ANY SURFACE WATER ENTERING THE TRANSLOAD FACILITY FROM OFF-SITE.

LEGEND

- CONTRACTOR BERTHING LOCATION
- CONTRACTOR TRUCK ACCESS ROUTE
- LIGHT POLE
- FIRE HYDRANT
- TRANSLOAD FACILITY BOUNDARY
- INSTALL TEMPORARY FENCE
- CONTRACTOR TRANSLOAD FACILITY BARGE ROUTE
- FW — FIRE WATER
- W — WATER
- SD — STORM DRAIN
- DRAINAGE BASIN

PROJECT NORTH

60' 0 60' 120'
30' 90'
SCALE: 1"=60'

Port of Tacoma
P.O. BOX 1837 TACOMA, WA 98401 (253)383-5841

kpff
2407 North 31st Street, Suite 100
Tacoma, Washington 98407
(253) 396-0150 Fax (253) 396-0162

MARK:	REVISION:	BY:	APPR:	DATE:

WADE KINGSLEY STATE OF WASHINGTON 32724 REGISTERED PROFESSIONAL ENGINEER

SWK	2/6/2015	
CHECKED BY	DATE	
MDK	2/6/2015	
PROJ. ENGR	DATE	
PRINTED BY: kvang Feb 04, 2015		
PORT ADDRESS: ONE SITCUM PLAZA TACOMA, WA 98401-1837		

APPROVED: 2-6-15
DIRECTOR ENG. DATE

PIER 4 PHASE 1
REMOVAL ACTION PROJECT
TRANSLOAD FACILITY PLAN

C2.2
SH 29 OF 54

CONT/CONS: 069982	TOWNSHIP: 21N	RANGE: 3E	SECTION: 27
M. ID: 091452	DAT-HRZ: WA83-SF	VERT: MLLW 19.39' @ Tide 22 1933	
PHASE: BID	PARCEL:	DRAWING SCALE: AS NOTED	

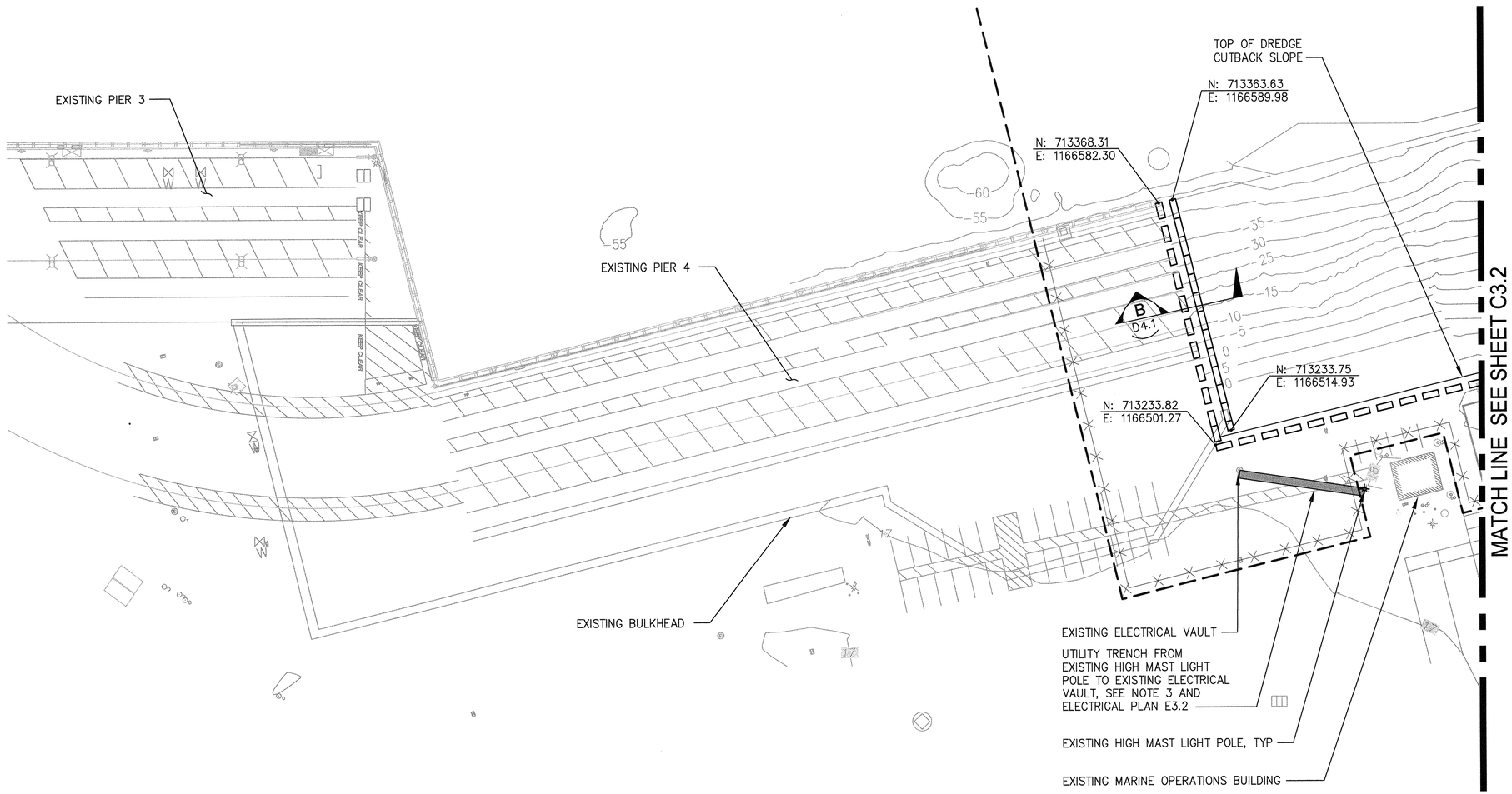

GRADING AND TEMPORARY PAVING PLAN

SCALE: 1"=40'

NOTES

1. CONCRETE ECOLOGY BLOCKS SHALL BE SPACED A MAXIMUM OF 5FT APART ALONG THE TOP OF DREDGE CUTBACK SLOPE AND WHERE INDICATED IN PLAN.
2. TOP OF FINISH GRADE OF PAVEMENT RESTORATION AREAS SHALL BE FLUSH WITH EXISTING PAVEMENT FOR SMOOTH TRANSITION AT PAVEMENT EDGES.
3. UTILITY TRENCHING AND PAVEMENT REPLACEMENT OUTSIDE PROJECT WORK AREA LIMITS TO BE COORDINATED WITH PORT AND TENANT.

LEGEND

- PROJECT WORK AREA LIMITS
- PAVEMENT RESTORATION FOR UTILITY INSTALLATION (1 / C3.3)
- RIP RAP SLOPE PROTECTION
- CONCRETE ECOLOGY BLOCKS
- LIGHT POLE
- TEMPORARY CONSTRUCTION FENCE
- ELECTRICAL VAULT

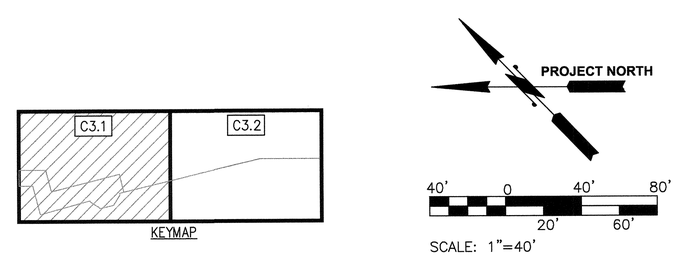

Port of Tacoma
P.O. BOX 1837 TACOMA, WA 98401 (253)383-5841

kpff
2407 North 31st Street, Suite 100
Tacoma, Washington 98407
(253) 396-0150 Fax (253) 396-0162

MARK:	REVISION:	BY:	APPR:	DATE:

WADE KINGSLEY STATE OF WASHINGTON 38426 REGISTERED PROFESSIONAL ENGINEER

APPROVED: 2-6-15
DIRECTOR ENG. DATE

SWK 2/6/2015	CHECKED BY DATE
MDK 2/6/2015	PROJ. ENGR DATE
PRINTED BY: kvang Feb 04, 2015	
PORT ADDRESS: ONE SITCUM PLAZA TACOMA, WA 98401-1837	

PIER 4 PHASE 1
REMOVAL ACTION PROJECT
GRADING AND TEMPORARY PAVING PLAN - SHEET 1

C3.1

SH 30 OF 54

CONT/CONS: 069982	TOWNSHIP: 21N	RANGE: 3E	SECTION: 27
M. ID: 091452	DAT-HRZ: WA83-SF	VERT: MLLW 19.39' @ Tide 22 1933	
PHASE: BID	PARCEL:	DRAWING SCALE: AS NOTED	

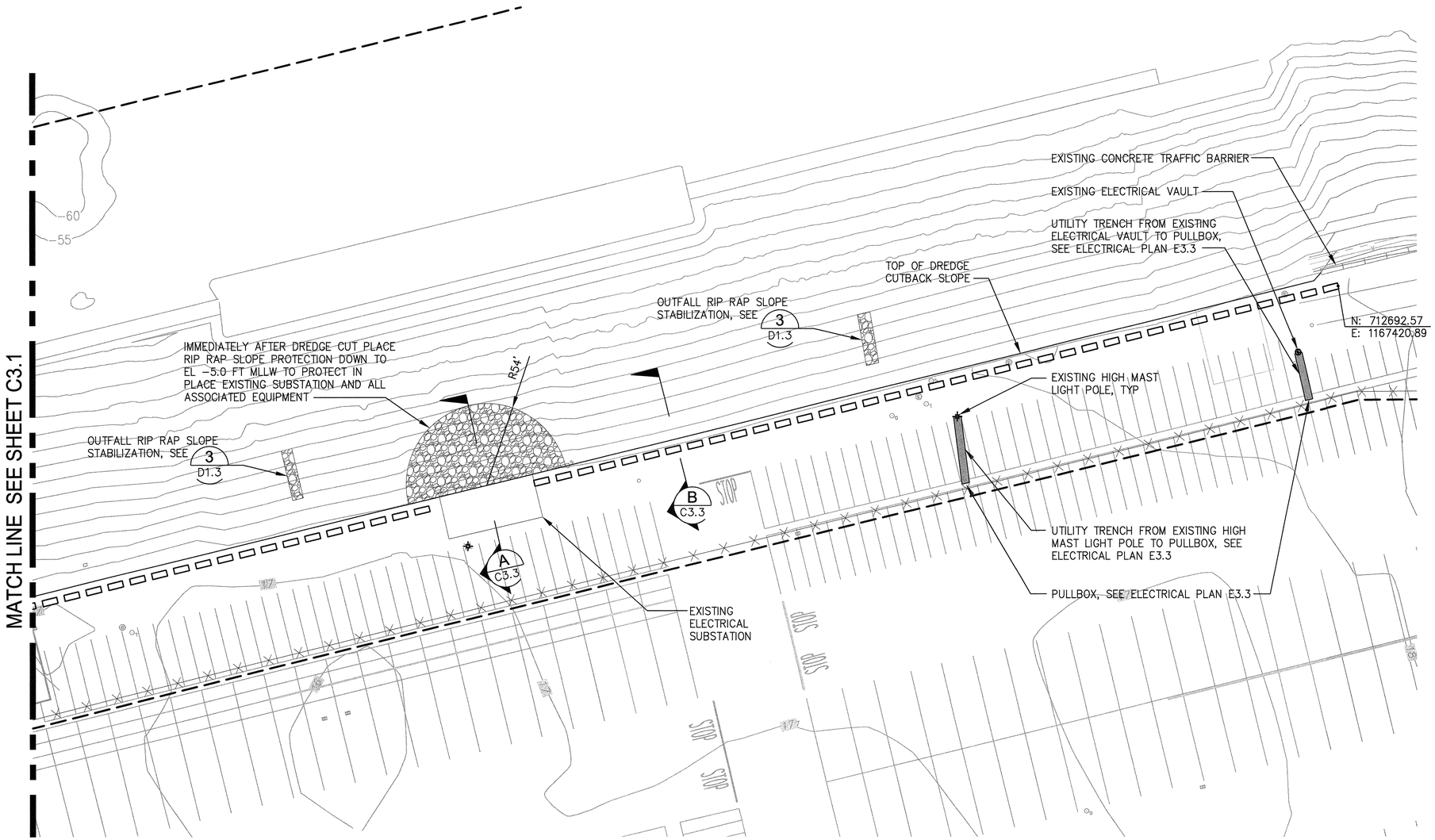

GRADING AND TEMPORARY PAVING PLAN

SCALE: 1"=40'

NOTES

1. CONCRETE ECOLOGY BLOCKS SHALL BE SPACED A MAXIMUM OF 5FT APART ALONG THE TOP OF DREDGE CUTBACK SLOPE AND WHERE INDICATED IN PLAN.
2. TOP OF FINISH GRADE OF PAVEMENT RESTORATION AREAS SHALL BE FLUSH WITH EXISTING PAVEMENT FOR SMOOTH TRANSITION AT PAVEMENT EDGES.
3. UTILITY TRENCHING AND PAVEMENT REPLACEMENT OUTSIDE PROJECT WORK AREA LIMITS TO BE COORDINATED WITH PORT AND TENANT.

LEGEND

- PROJECT WORK AREA LIMITS
- PAVEMENT RESTORATION FOR UTILITY INSTALLATION (1 / C3.3)
- RIP RAP SLOPE PROTECTION
- CONCRETE ECOLOGY BLOCKS
- LIGHT POLE
- TEMPORARY CONSTRUCTION FENCE
- ELECTRICAL VAULT

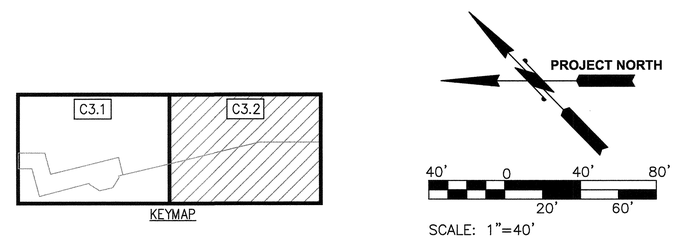

Port of Tacoma
P.O. BOX 1837 TACOMA, WA 98401 (253)383-5841

kpff
2407 North 31st Street, Suite 100
Tacoma, Washington 98407
(253) 396-0150 Fax (253) 396-0162

MARK:	REVISION:	BY:	APPR:	DATE:

STATE OF WASHINGTON
MARK DE LINGSTAT
STATE OF WASHINGTON
MARK DE LINGSTAT
32278
REGISTERED PROFESSIONAL ENGINEER

APPROVED: 2-6-15
DIRECTOR ENG. DATE

SWK	2/6/2015
CHECKED BY	DATE
MDK	2/6/2015
PROJ. ENGR	DATE
PRINTED BY:	kvang Feb 04, 2015
PORT ADDRESS:	ONE SITCUM PLAZA TACOMA, WA 98401-1837

PIER 4 PHASE 1
REMOVAL ACTION PROJECT
GRADING AND TEMPORARY PAVING PLAN - SHEET 2

C3.2
SH 31 OF 54

CONT/CONS: 069982	TOWNSHIP: 21N	RANGE: 3E	SECTION: 27
M. ID: 091452	DAT-HRZ: WA83-SF	VERT: MLLW 19.39' @ Tide 22 1933	
PHASE: BID	PARCEL:	DRAWING SCALE: AS NOTED	

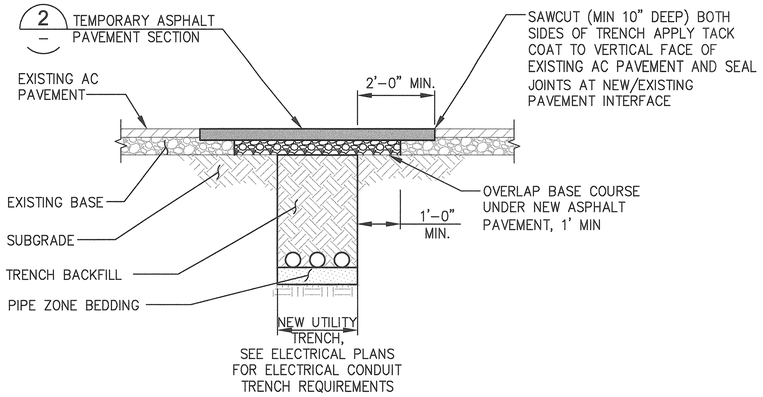

1 PAVEMENT RESTORATION

C3.1,C3.2 NTS

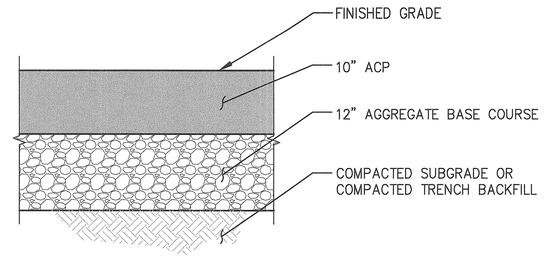

2 TEMPORARY ASPHALT PAVEMENT SECTION

NTS

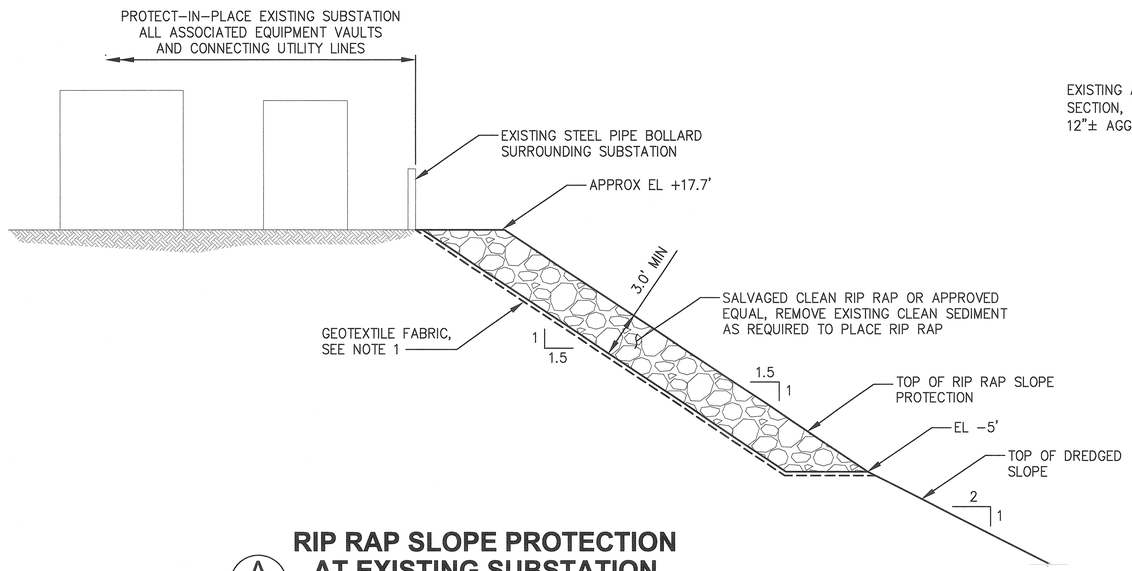

A RIP RAP SLOPE PROTECTION AT EXISTING SUBSTATION

C3.2 NTS

NOTES:

1. GEOTEXTILE FABRIC SHALL BE MIRAFI FW404 OR APPROVED EQUAL AND INSTALLED PER MANUFACTURERS RECOMMENDATIONS.

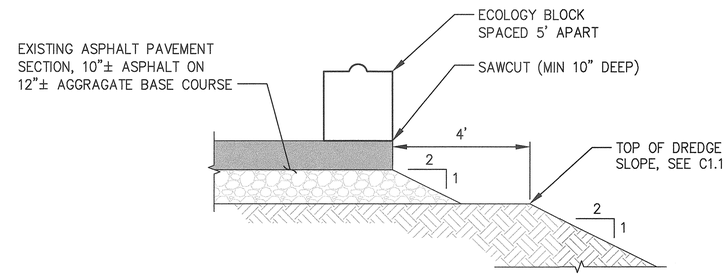

B TYPICAL PAVEMENT EDGE SECTION

C3.2 NTS

Port of Tacoma
P.O. BOX 1837 TACOMA, WA 98401 (253)383-5841
kpff
2407 North 31st Street, Suite 100
Tacoma, Washington 98407
(253) 396-0150 Fax (253) 396-0162

MARK:	REVISION:	BY:	APPR:	DATE:

STATE OF WASHINGTON
WADE KINGSLEY
36425
REGISTERED PROFESSIONAL ENGINEER

SWK	CHECKED BY	2/6/2015 DATE
MDK	PROJ. ENGR	2/6/2015 DATE

APPROVED: 2-6-15
DIRECTOR ENG. DATE

PRINTED BY: kvang Feb 04, 2015
PORT ADDRESS: ONE SITCUM PLAZA TACOMA, WA 98401-1837

PIER 4 PHASE 1
REMOVAL ACTION PROJECT
GRADING AND TEMPORARY PAVING DETAILS

C3.3
SH 32 OF 54

CONT/CONS: 069982	TOWNSHIP: 21N	RANGE: 3E	SECTION: 27
M. ID: 091452	DAT-HRZ: WA83-SF	VERT: MLLW 19.39' @ Tide 22.1933	
PHASE: BID	PARCEL:	DRAWING SCALE: AS NOTED	

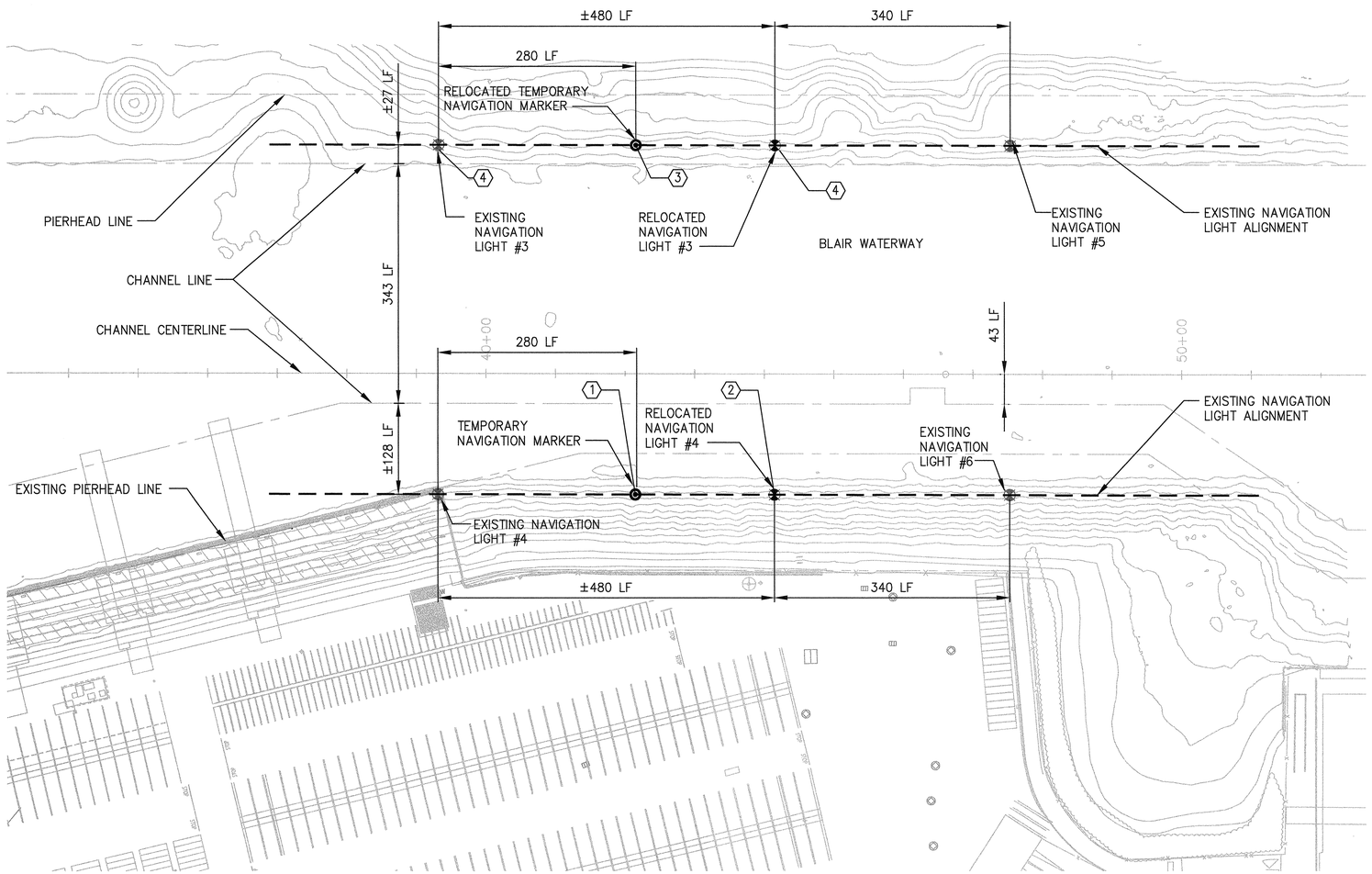

NAVIGATION LIGHTING PLAN

SCALE: 1"=100'

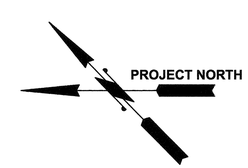

GENERAL NOTES:

1. SEE SPECIFICATIONS FOR LIST OF REFERENCE DRAWINGS DETAILING THE EXISTING NAVIGATION LIGHTS.
2. EXISTING NAVIGATION LIGHT LOCATIONS ARE APPROXIMATE, PRIOR TO BEGINNING WORK CONTRACTOR SHALL SURVEY THE EXISTING LIGHT LOCATIONS, SEE SPECIFICATIONS FOR ADDITIONAL REQUIREMENTS.
3. AT THE CONTRACTOR'S OPTION THE TEMPORARY NAVIGATION MARKER CAN BE MOVED FROM THE WEST SIDE OF THE WATERWAY TO THE EAST SIDE OF THE WATERWAY AFTER CONSTRUCTION OF NAVIGATION LIGHT #4 IN THE PERMANENT LOCATION IS COMPLETE.
4. REFER TO SPECIFICATIONS FOR TIMING RESTRICTIONS ASSOCIATED WITH THIS WORK.

NAVIGATION LIGHT PHASING:

(1) TEMPORARY NAVIGATION MARKER ON WEST SIDE OF WATERWAY SHALL BE INSTALLED AND OPERATING PRIOR TO REMOVAL OF NAVIGATION LIGHT #4. TEMPORARY NAVIGATION MARKER SHALL BE INSTALLED ALONG SAME ALIGNMENT AS EXISTING NAVIGATION LIGHT #4 AND #6, BUT OFFSET 280 LF SOUTH OF EXISTING NAVIGATION LIGHT #4.

(2) CONSTRUCT NAVIGATION LIGHT #4 AT PERMANENT LOCATION.

(3) TEMPORARY NAVIGATION MARKER ON EAST SIDE OF WATERWAY SHALL BE INSTALLED AND OPERATIONAL PRIOR TO REMOVAL OF NAVIGATION LIGHT #3. TEMPORARY NAVIGATION MARKER SHALL BE INSTALLED ALONG SAME ALIGNMENT AS EXISTING NAVIGATION LIGHT #3 AND #5, BUT OFFSET 280 LF SOUTH OF EXISTING NAVIGATION LIGHT #3.

(4) REMOVE AND SALVAGE NAVIGATION LIGHT #3 AND ALL APPURTENANCES AND INSTALL AT PERMANENT LOCATION.

NAVIGATION LIGHT #3 DEMOLITION AND CONSTRUCTION NOTES:

1. DISCONNECT THE EXISTING POWER SOURCE.
2. REMOVE EXISTING STEEL TOWER AND PLATFORM ASSEMBLY FROM SUPPORTING STEEL PILES AT EXISTING WELD SPLICE.
3. EXTRACT AND DISPOSE OF EXISTING STEEL PILES.
4. INSTALL NEW PILES AT THE DESIGNATED LOCATION ALONG EXISTING ALIGNMENT AND ERECT THE EXISTING TOWER AND PLATFORM ASSEMBLY PER DETAILS ON S1.3 AND S1.4. THE RELOCATED TOWER AND LIGHT ELEVATION SHALL MATCH THE EXISTING TOWER AND LIGHT ELEVATION. REPLACE ANY HARDWARE DAMAGED DURING REMOVAL OF EXISTING TOWER OR PROVIDE NEW AS REQUIRED FOR RE-INSTALLATION OF THE TOWER AND PLATFORM.

NAVIGATION LIGHT #4 DEMOLITION AND CONSTRUCTION NOTES:

1. DISCONNECT THE EXISTING POWER SOURCE.
2. REMOVE EXISTING STEEL TOWER AND PLATFORM ASSEMBLY FROM EXISTING PIER 4 DECK.
3. INSTALL NEW PILES AT THE DESIGNATED LOCATION ALONG EXISTING ALIGNMENT AND ERECT THE EXISTING TOWER AND PLATFORM ASSEMBLY, PER DETAILS ON S1.3 AND S1.4. THE RELOCATED TOWER AND LIGHT ELEVATION SHALL MATCH THE EXISTING TOWER AND LIGHT ELEVATION. REPLACE ANY HARDWARE DAMAGED DURING REMOVAL OF EXISTING TOWER OR PROVIDE NEW AS REQUIRED FOR RE-INSTALLATION OF THE TOWER AND PLATFORM.

LEGEND

- EXISTING NAVIGATION LIGHT
- TEMPORARY NAVIGATION MARKER, (1 / C4.2)
- RELOCATED NAVIGATION LIGHT
- EXISTING NAVIGATION LIGHT ALIGNMENT, SEE NOTE 2

100' 0 100' 200'
50' 150'
SCALE: 1"=100'

Port of Tacoma
P.O. BOX 1837 TACOMA, WA 98401 (253)383-5841

kpff
2407 North 31st Street, Suite 100
Tacoma, Washington 98407
(253) 396-0150 Fax (253) 396-0162

MARK:	REVISION:	BY:	APPR:	DATE:

STEVEN W. KINGSLEY, STATE OF WASHINGTON, 36126, REGISTERED PROFESSIONAL ENGINEER

SWK	2/6/2015		
CHECKED BY	DATE		
MDK	2/6/2015		
PROJ. ENGR	DATE		
kvang Feb 04, 2015			
PRINTED BY:			
PORT ADDRESS:ONE SITCUM PLAZA TACOMA, WA 98401-1837			

APPROVED: 2-6-15
DIRECTOR ENG. DATE

PIER 4 PHASE 1
REMOVAL ACTION PROJECT
NAVIGATION LIGHTING PLAN

C4.1
SH 33 OF 54

CONT/CONS: 069982	TOWNSHIP: 21N	RANGE: 3E	SECTION: 27
M. ID: 091452	DAT-HRZ: WA83-SF	VERT: MLLW 19.39' @ Tide 22.1933	
PHASE: BID	PARCEL:	DRAWING SCALE: AS NOTED	

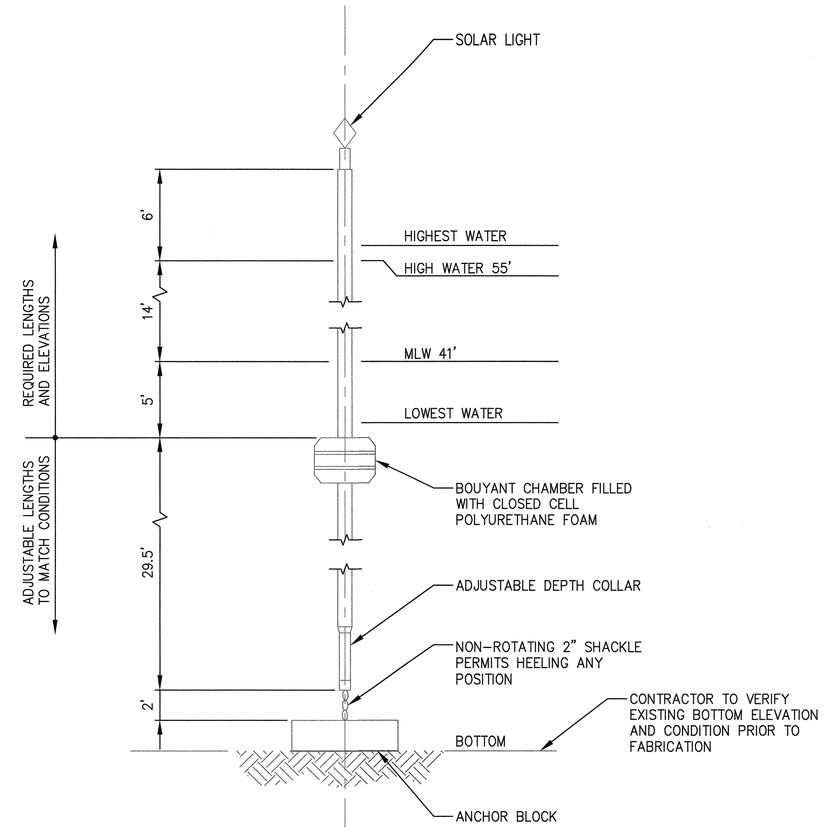

TEMPORARY NAVIGATION MARKER

1 / C4.1

NTS

kpff
2407 North 31st Street, Suite 100
Tacoma, Washington 98407
(253) 396-0150 Fax (253) 396-0162

Port of Tacoma
P.O. BOX 1837 TACOMA, WA 98401 (253)383-5841

MARK:	REVISION:	BY:	APPR:	DATE:

SWK 2/6/2015 CHECKED BY DATE

MDK 2/6/2015 PROJ. ENGR DATE

ARPROVED: 2-6-15 DIRECTOR ENG. DATE

PRINTED BY: kvang Feb 04, 2015

PORT ADDRESS: ONE SITCUM PLAZA TACOMA, WA 98401-1837

PIER 4 PHASE 1
REMOVAL ACTION PROJECT
TEMPORARY NAVIGATION MARKER DETAILS

C4.2
SH 34 OF 54

CONT/CONS: 069982 | TOWNSHIP: 21N | RANGE: 3E | SECTION: 27

M. ID: 091452 | DAT-HRZ: WA83-SF | VERT: MLLW 19.39' @ Tide 22 1933

PHASE: BID | PARCEL: | DRAWING SCALE: AS NOTED

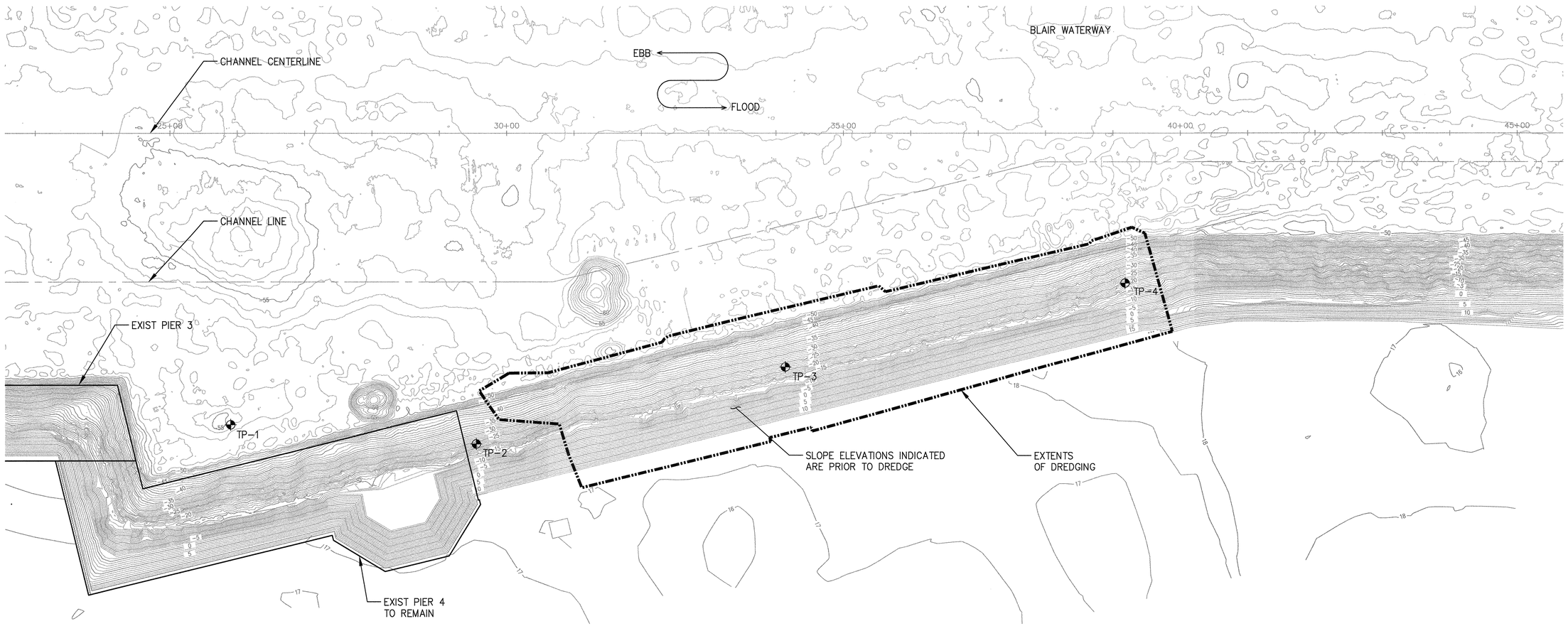

1 TEST PILE LOCATION PLAN

SCALE: 1"=80'

NOTES

1. EXISTING BATHYMETRY SHOWN. TEST PILES SHALL BE INSTALLED AFTER COMPLETION OF DREDGE WORK INDICATED ON DRAWING C1.1. SEE SPECIFICATIONS FOR ADDITIONAL TIMING RESTRICTIONS FOR TEST PILE INSTALLATION AND REMOVAL.
2. ALL TEST PILES SHALL BE DRIVEN TO THE MINIMUM TIP ELEVATIONS INDICATED.
3. ALL TEST PILES SHALL BE COMPLETELY EXTRACTED AND DISPOSED OF AFTER COMPLETION OF THE TEST PILE PROGRAM.
4. SEE SPECIFICATIONS FOR ADDITIONAL INFORMATION REGARDING THE TEST PILE PROGRAM.

TEST PILE SCHEDULE

DESIGNATION	PILE TYPE	TIP ELEVATION	CUT-OFF ELEVATION	TOTAL PILE LENGTH	NORTHING	EASTING
TP-1	24" SOLID OCTAGONAL PRESTRESSED CONCRETE	-125	-	145	713582.04	1166334.56
TP-2	24" SOLID OCTAGONAL PRESTRESSED CONCRETE	-110	-	130	713307.68	1166577.50
TP-3	24" SOLID OCTAGONAL PRESTRESSED CONCRETE	-125	-	145	713068.73	1166984.65
TP-4	24" SOLID OCTAGONAL PRESTRESSED CONCRETE	-115	-	135	712807.25	1167433.54

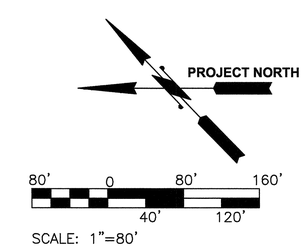

Port of Tacoma
P.O. BOX 1837 TACOMA, WA 98401 (253)383-5841

kpff
2407 North 31st Street, Suite 100
Tacoma, Washington 98407
(253) 396-0150 Fax (253) 396-0162

MARK:	REVISION:	BY:	APPR:	DATE:

STEVEN E. KIRKELAS, STATE OF WASHINGTON, 35506, REGISTERED STRUCTURAL PROFESSIONAL ENGINEER, 2-6-15

APPROVED: 2-6-15
DIRECTOR ENG. DATE

SEK 2/6/2015
CHECKED BY DATE

TAH 2/6/2015
PROJ. ENGR DATE

PRINTED BY: kvang Feb 03, 2015
PORT ADDRESS: ONE SITCUM PLAZA
TACOMA, WA 98401-1837

PIER 4 PHASE 1
REMOVAL ACTION PROJECT
TEST PILE LOCATION PLAN

S1.1

SH 35 OF 54

CONT/CONS: 069982	TOWNSHIP: 21N	RANGE: 3E	SECTION: 27
M. ID: 091452	DAT-HRZ: WA83-SF	VERT: MLLW 19.39' @ Tide 22 1933	
PHASE: BID	PARCEL:	DRAWING SCALE: AS NOTED	

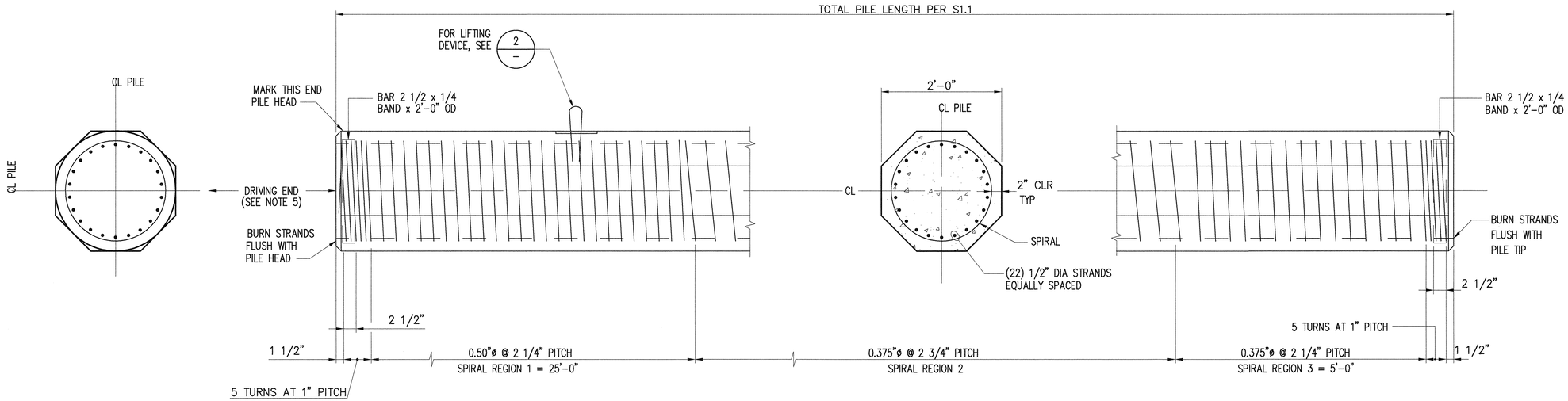

1 24" SOLID OCTAGONAL PRECAST PRESTRESSED CONCRETE PILE

1"=1'–0"

NOTES:

1. MINIMUM CONCRETE STRENGTHS ARE AS FOLLOWS:
   - @ RELEASE F'c = 4800 PSI
   - @ DRIVING F'c = 8000 PSI
   - @ 28 DAYS F'c = 8000 PSI
2. 24" SOLID OCTAGONAL PRECAST PRESTRESSED PILE PROPERTIES:

SECTION AREA	477 IN^2
WEIGHT	524 LBS/FT
SECTION MODULUS	1513 IN^3
DESIGN PRESTRESS FORCE	578 KIPS
DESIGN PRESTRESS IN CONC	1211 PSI

3. PRESTRESSING STEEL SHALL BE UNCOATED 270 KSI – 1/2"ø – 7 WIRE, LOW RELAXATION, STRAND CONFORMING TO ASTM A416
4. FOR PILE TIP ELEVATIONS SEE S1.1.
5. MARK DRIVING END OF ALL PILES CLEARLY AT PRECAST PLANT.
6. PILES SHALL HAVE MARKS DESIGNATING THE SIZE, LENGTH, AND TEST PILE DESIGNATION AT THE PRECAST PLANT.
7. SPIRAL REINFORCING MAY BE SPLICED BY WRAPPING ONE AND ONE HALF TURNS OF SPIRAL AND TERMINATING WITH A 135° SEISMIC HOOK.
8. SPIRAL REINFORCEMENT SHALL BE ASTM A82 SMOOTH OR DEFORMED.

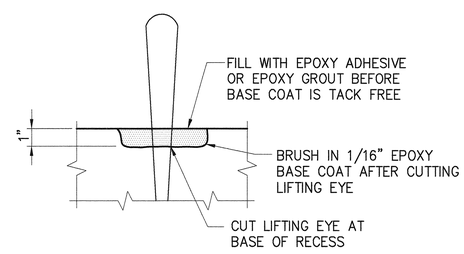

NOTE:
LIFTING DEVICE AND LOCATIONS SHALL BE DETERMINED BY THE CONTRACTOR CONSIDERING ALL LOADS IMPARTED TO THE PILE (NORMAL AND PARALLEL TO THE LONGITUDINAL AXIS) BY THE RIGGING BEING USED. ALL MODES OF LIFTING (FABRICATION AND FIELD) SHALL BE CONSIDERED.

2 LIFTING EYE DETAIL

NTS

Port of Tacoma
P.O. BOX 1837 TACOMA, WA 98401 (253)383-5841

kpff
2407 North 31st Street, Suite 100
Tacoma, Washington 98407
(253) 396-0150 Fax (253) 396-0162

MARK: | REVISION: | BY: | APPR: | DATE:

STATE OF WASHINGTON 20536 STEVEN E. KIBLER REGISTERED STRUCTURAL PROFESSIONAL ENGINEER
2/6/15

APPROVED: 2-6-15
DIRECTOR ENG. DATE

SEK 2/6/15
CHECKED BY DATE
TAH 2/6/15
PROJ. ENGR DATE

PRINTED BY: dmumma Feb 03, 2015
PORT ADDRESS: ONE SITCUM PLAZA TACOMA, WA 98401-1837

PIER 4 PHASE 1
REMOVAL ACTION PROJECT
PRECAST CONCRETE PILE DETAILS

TOWNSHIP: 21N | RANGE: 3E | SECTION: 27
DAT–HRZ: WA83-SF | VERT: MLLW 19.39' @ Tide 22 1933
PARCEL: | DRAWING SCALE: AS NOTED

S1.2
SH 36 OF 54

CONT/CONS: 069982
M. ID: 091452
PHASE: BID

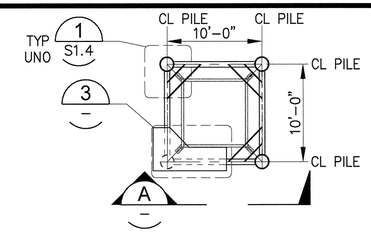

1 PLAN - RELOCATED NAVIGATION LIGHT #4

NTS

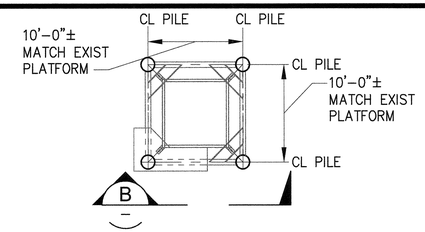

2 PLAN - RELOCATED NAVIGATION LIGHT#3

NTS

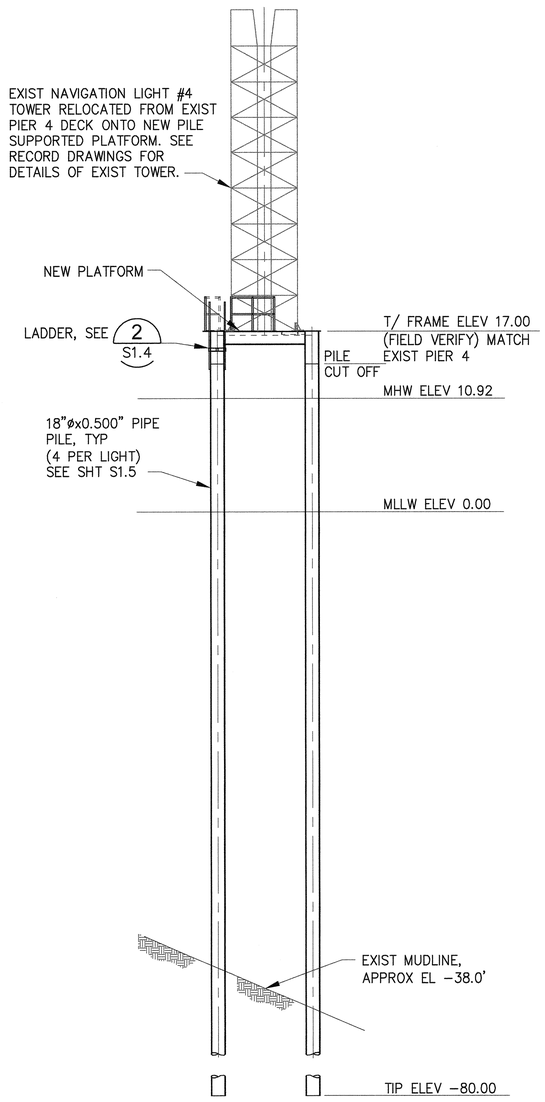

A ELEVATION - RELOCATED NAVIGATION LIGHT #4

NTS

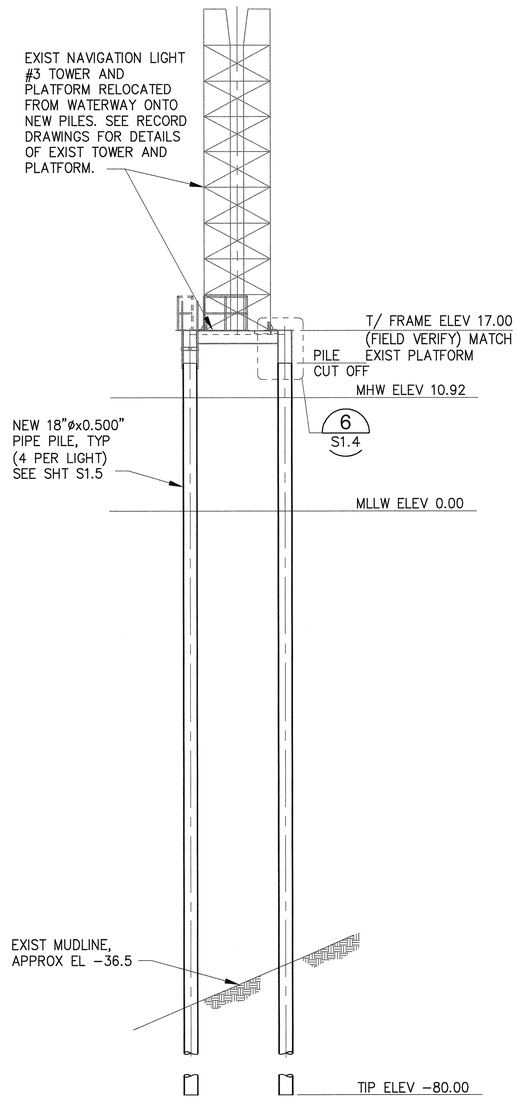

B ELEVATION - RELOCATED NAVIGATION LIGHT #3

NTS

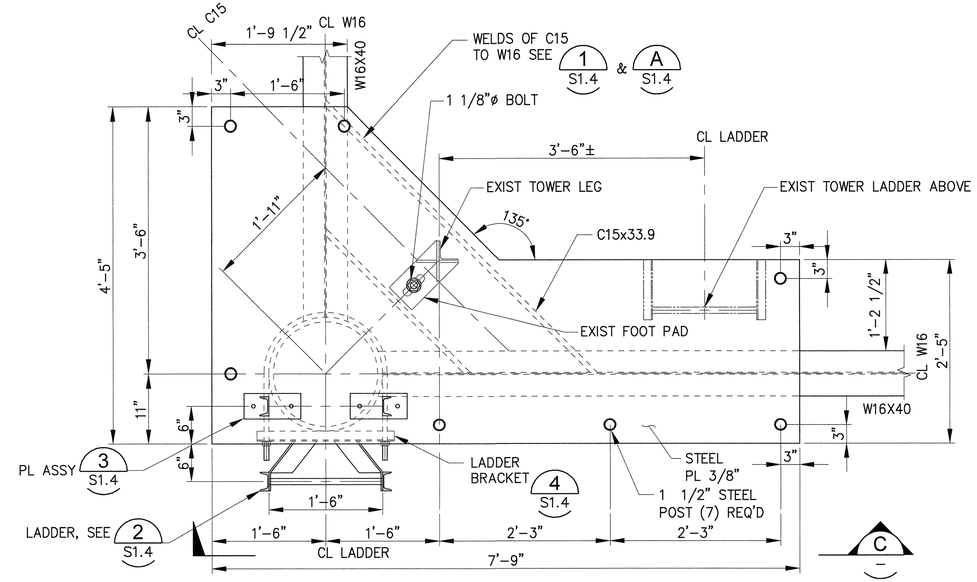

3 PLAN DETAIL - RELOCATED NAVIGATION LIGHT #4

1"=1'-0"

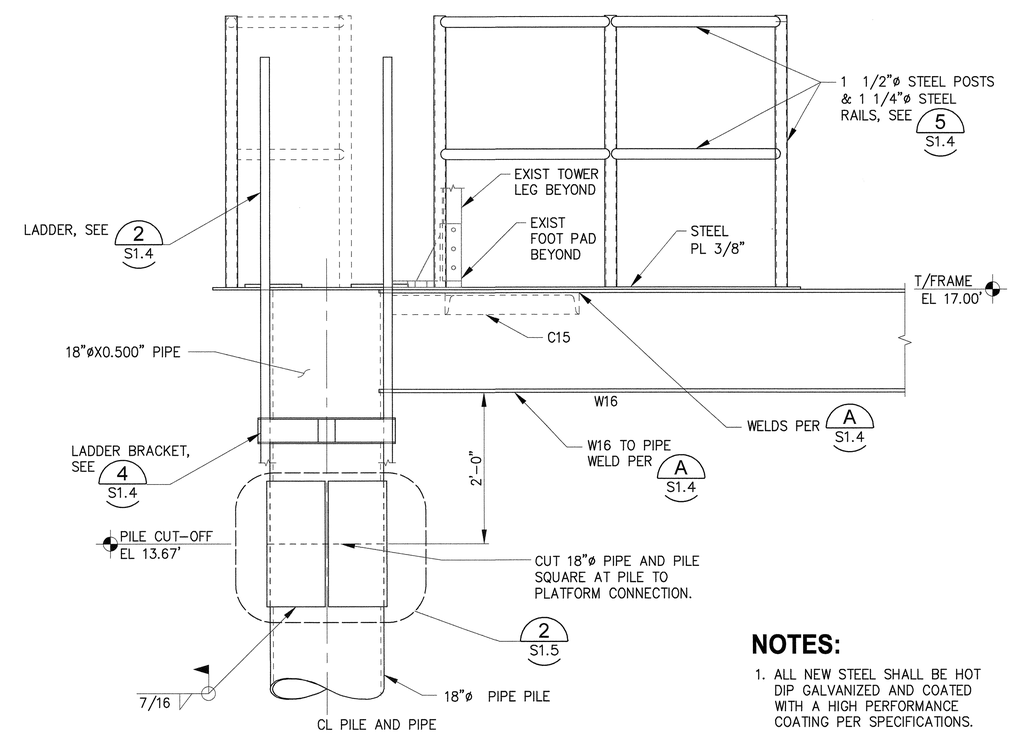

C SECTION - RELOCATED NAVIGATION LIGHT #4

1"=1'-0"

NOTES:

1. ALL NEW STEEL SHALL BE HOT DIP GALVANIZED AND COATED WITH A HIGH PERFORMANCE COATING PER SPECIFICATIONS.

Port of Tacoma
P.O. BOX 1837 TACOMA, WA 98401 (253)383-5841

kpff
2407 North 31st Street, Suite 100
Tacoma, Washington 98407
(253) 396-0150 Fax (253) 396-0162

MARK:	REVISION:	BY:	APPR:	DATE:

STATE OF WASHINGTON 22836 STEVEN E. RUBELBAY REGISTERED PROFESSIONAL ENGINEER
2-6-15

	SEK	2/6/15
	CHECKED BY	DATE
	TAH	2/6/15
	PROJ. ENGR	DATE
APPROVED: 2-6-15	PRINTED BY: dmumma Feb 03, 2015	
DIRECTOR ENG. DATE	PORT ADDRESS:ONE SITCUM PLAZA TACOMA, WA 98401-1837	

PIER 4 PHASE 1
REMOVAL ACTION PROJECT
NAVIGATION LIGHT DETAILS - SHEET 1

S1.3

SH 37 OF 54

CONT/CONS: 069982	TOWNSHIP: 21N	RANGE: 3E	SECTION: 27
M. ID: 091452	DAT-HRZ: WA83-SF	VERT: MLLW 19.39' @ Tide 22 1933	
PHASE: BID	PARCEL:	DRAWING SCALE: AS NOTED	

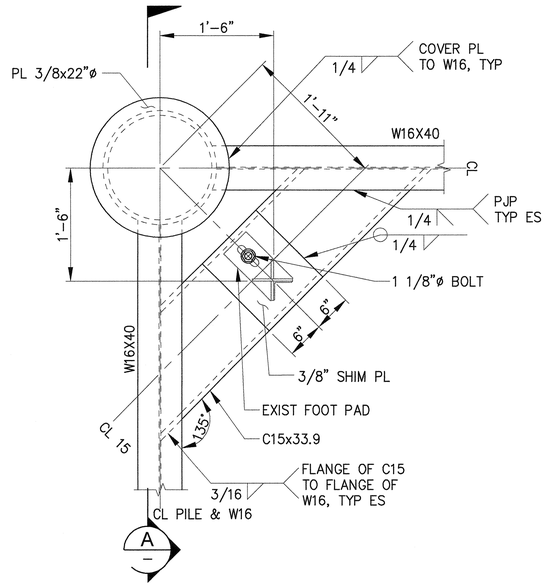

PLAN DETAIL - RELOCATED NAVIGATION LIGHT #4

1 / S1.3 — 1"=1'-0"

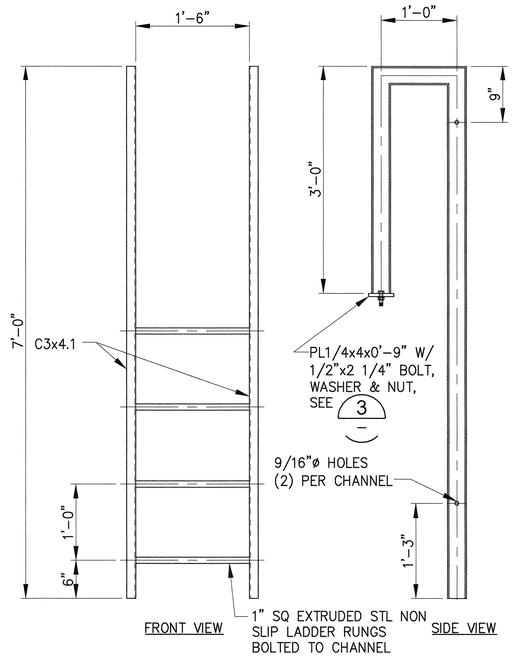

DETAIL - RELOCATED NAVIGATION LIGHT #4 LADDER

2 / S1.3 — 1"=1'-0"

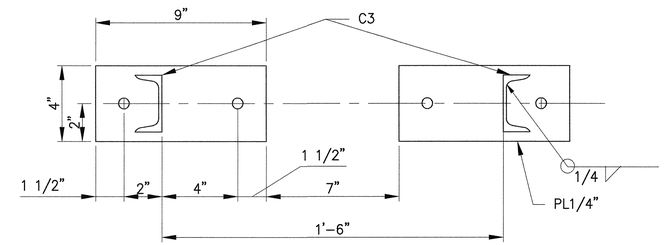

DETAIL - RELOCATED NAVIGATION LIGHT #4 LADDER BASE PLATES

3 / S1.3 — 3"=1'-0"

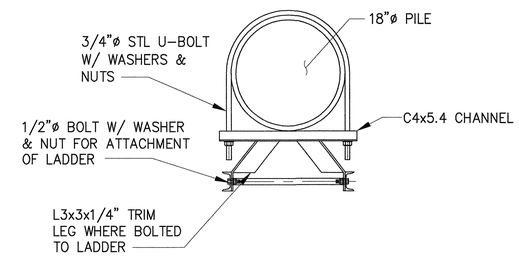

DETAIL - RELOCATED NAVIGATION LIGHT #4 LADDER BRACKET

4 / S1.3 — 1"=1'-0"

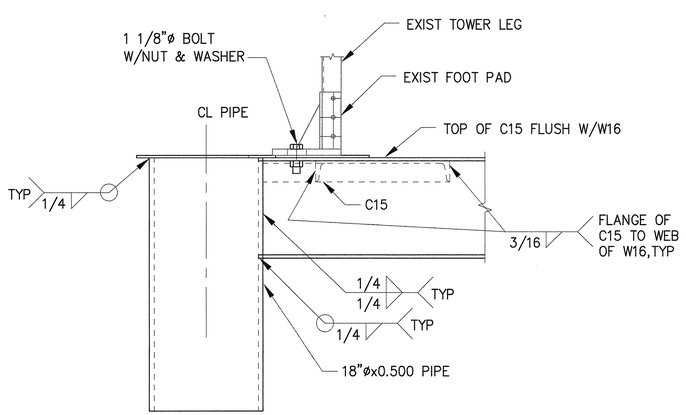

SECTION - RELOCATED NAVIGATION LIGHT #4

A — 1"=1'-0"

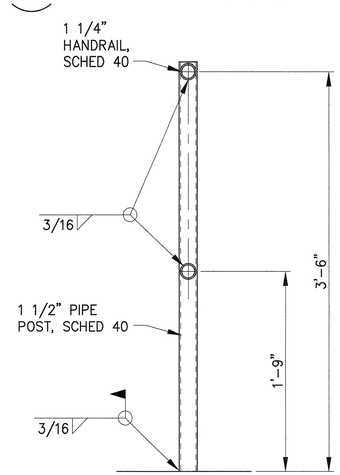

DETAIL - RELOCATED NAVIGATION LIGHT #4 HANDRAIL, TYP

5 / S1.3 — 1 1/2"=1'-0"

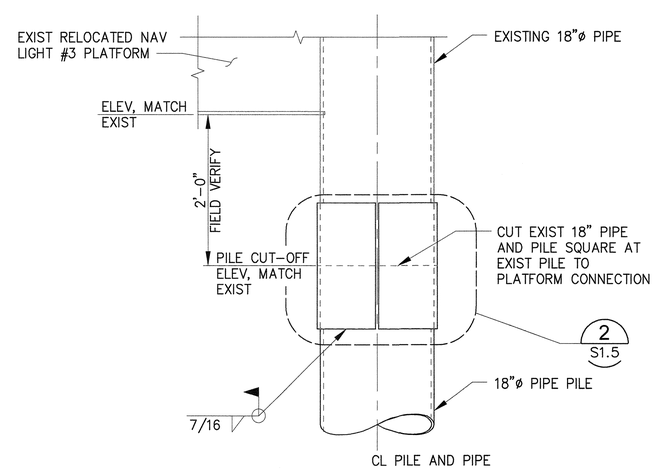

DETAIL - RELOCATED NAVIGATION LIGHT #3 TO PILE CONNECTION

6 / S1.3 — 1"=1'-0"

NOTES:

1. ALL NEW STEEL SHALL BE HOT DIP GALVANIZED AND COATED WITH A HIGH PERFORMANCE COATING PER SPECIFICATIONS

Port of Tacoma — P.O. BOX 1837 TACOMA, WA 98401 (253)383-5841

kpff — 2407 North 31st Street, Suite 100, Tacoma, Washington 98407 (253) 396-0150 Fax (253) 396-0162

MARK:	REVISION:	BY:	APPR:	DATE:

STATE OF WASHINGTON — JOHN E. KOLB — 38536 — STRUCTURAL — PROFESSIONAL ENGINEER — 2-6-15

APPROVED: 2-6-15
DIRECTOR ENG. DATE

SEK	2/6/15
CHECKED BY	DATE
TAH	2/6/15
PROJ. ENGR	DATE

PRINTED BY: dmumma Feb 03, 2015
PORT ADDRESS: ONE SITCUM PLAZA TACOMA, WA 98401-1837

PIER 4 PHASE 1
REMOVAL ACTION PROJECT
NAVIGATION LIGHT DETAILS - SHEET 2

S1.4

SH 38 OF 54

CONT/CONS: 069982	TOWNSHIP: 21N	RANGE: 3E	SECTION: 27
M. ID: 091452	DAT-HRZ: WA83-SF	VERT: MLLW 19.39' @ Tide 22 1933	
PHASE: BID	PARCEL:	DRAWING SCALE: AS NOTED	

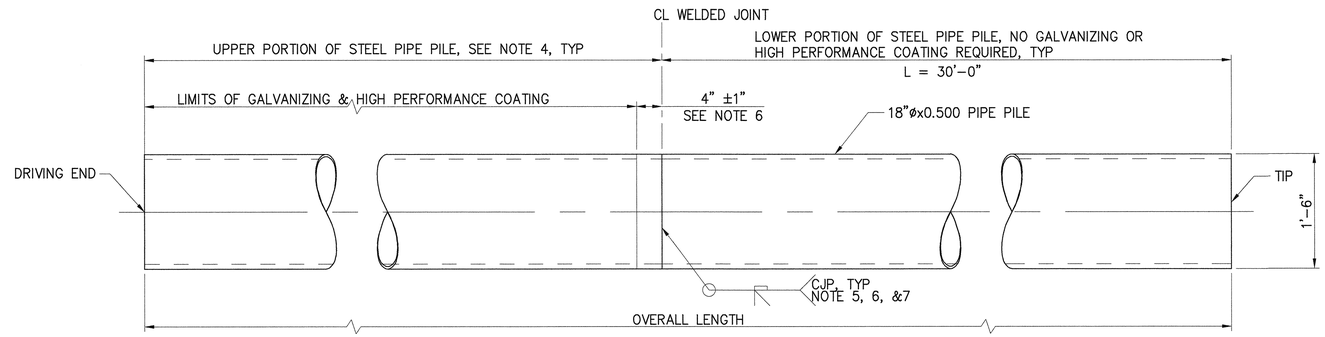

1 STEEL PIPE PILE DETAIL

S1.3

1"=1'-0"

NOTES:

1. ALL STEEL PIPE PILES SHALL CONFORM TO THE STRUCTURAL NOTES AND SPECIFICATIONS.
2. ALL PILES SHALL BE FABRICATED AND COATED PRIOR TO DELIVERY ON SITE.
3. STEEL PIPE PILING SHALL CONFORM TO ASTM A252, GR 2, Fy = 50 KSI MIN.
4. UPPER PORTION OF STEEL PIPE PILE TO BE GALVANIZED AND COATED WITH A HIGH PERFORMANCE COATING IN ACCORDANCE WITH THE SPECIFICATIONS.
5. WELDING SHALL CONFORM TO "STRUCTURAL WELDING CODE – STEEL", AWS D1.1.
6. HOLD BACK COATING FROM CL WELDED JOINT ON INSIDE AND OUTSIDE OF PIPE FOR WELDING.
7. MANUFACTURER MAY USE THE ALTERNATE CJP TUBULAR BUTT JOINT. ALL CJP TUBULAR BUTT JOINTS SHALL HAVE A WPS QUALIFIED IN ACCORDANCE WITH AWS D1.1 SECTION 4.

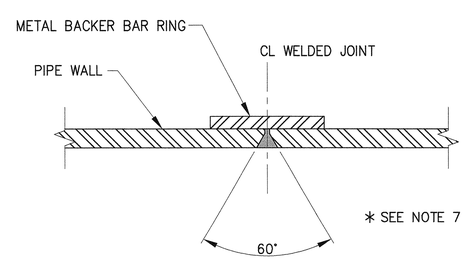

ALTERNATE CJP TUBULAR BUTT JOINT

NTS

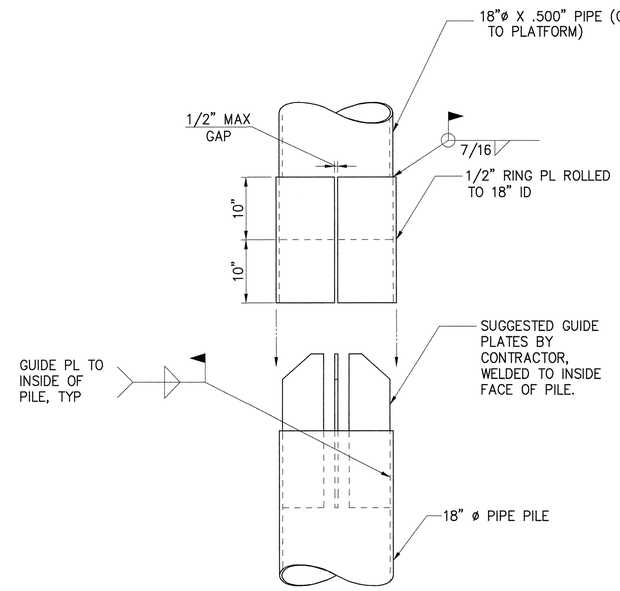

2 PIPE TO PILE CONNECTION DETAIL

S1.3,S1.4

1"=1'-0"

Port of Tacoma
P.O. BOX 1837 TACOMA, WA 98401 (253)383-5841

kpff
2407 North 31st Street, Suite 100
Tacoma, Washington 98407
(253) 396-0150 Fax (253) 396-0162

MARK:	REVISION:	BY:	APPR:	DATE:

STATE OF WASHINGTON 20536 SEAN E. KOLBLAS REGISTERED PROFESSIONAL ENGINEER
2-6-15

SEK	CHECKED BY	2/6/15 DATE
TAH	PROJ. ENGR	2/6/15 DATE
2-6-15	DIRECTOR ENG.	DATE

APPROVED: [signature]

PIER 4 PHASE 1
REMOVAL ACTION PROJECT
STEEL PIPE PILE DETAILS

PRINTED BY: dmumma Feb 03, 2015
PORT ADDRESS: ONE SITCUM PLAZA TACOMA, WA 98401-1837

S1.5

SH 39 OF 54

CONT/CONS: 069982	TOWNSHIP: 21N	RANGE: 3E	SECTION: 27
M. ID: 091452	DAT–HRZ: WA83-SF	VERT: MLLW 19.39' @ Tide 22 1933	
PHASE: BID	PARCEL:	DRAWING SCALE: AS NOTED	

ONE-LINE DIAGRAM

- FUSE
- GROUND
- TRANSFORMER, SECONDARY VOLTAGE. PHASE AND RATING AS INDICATED
- 400 — CIRCUIT BREAKER, TRIP SHOWN, 3 POLE UNLESS OTHERWISE NOTED
- 600 400 — FUSED SWITCH, SWITCH AND FUSE CURRENT RATING AS INDICATED, 3 POLE UNLESS OTHERWISE NOTED
- 400 — SWITCH, CURRENT RATING AS INDICATED, 3 POLE UNLESS OTHERWISE NOTED
- M — REVENUE GRADE METER AND ENCLOSURE

POWER

- GROUND ROD
- J — JUNCTION BOX
- DUPLEX RECEPTACLE
- P — PULLBOX

LIGHTING

- INCANDESCENT LIGHT FIXTURE
- HIGH MAST LIGHTING POLE WITH HID LIGHT FIXTURES
- WOOD POLE

CONDUIT AND RACEWAY

- BP — UNDERGROUND PVC OR GRS CONDUIT, AND CONDUCTORS. AC = ABOVE GROUND COMM AP = ABOVE GROUND POWER BP = BURIED POWER T = BURIED COMM
- CONDUIT CONTINUED
- LIGHT DASHED LINE INDICATES CONDUIT BENEATH PIER
- BP, T — HEAVY DASHED LINE INDICATES ELECTRICAL OR COMMUNICATIONS ITEMS TO BE REMOVED

DRAWING CONVENTIONS

- X / E1 — DETAIL NTS — DETAIL/SECTION TITLE UNDERLINE, E1 = SHEET WHERE SHOWN
- A / E1 — A = DETAIL NUMBER E1 = SHEET WHERE SHOWN
- 1 / E1 — 1 = DETAIL NUMBER E1 = SHEET WHERE SHOWN
- PROJECT NORTH — NORTH ARROW
- 3 — NOTE
- 1 — REVISION REFERENCE
- XXX / FTP-1 = FTP 1 — EQUIPMENT ID TAG – SEE SCHEDULE REFERENCED ON EQUIPMENT AND MECHANICAL DWGS (EQ.XX, MX.X, PX.X) COORDINATE EQUIPMENT LOCATION WITH ASSOCIATED MECHANICAL AND EQUIPMENT PLANS.
- HATCHING INDICATES ITEMS TO BE REMOVED
- SL58, WIFIP15 — CONDUIT DESIGNATIONS

ABBREVIATIONS

A	AMMETER, AMPERE
AF	AMP FUSE
AFF	ABOVE FINISHED FLOOR
AFG	ABOVE FINISHED GRADE
AIC	AMPERE INTERRUPTING CAPACITY
ANN	ANNUNCIATOR
AS	AMP SWITCH
ASYM	ASYMMETRICAL
ATS	AUTOMATIC TRANSFER SWITCH
AUX	AUXILIARY
BF	BALLAST FACTOR
BLDG	BUILDING
BRKR	BREAKER
C	CONDUIT
CB	CIRCUIT BREAKER
CCTV	CLOSED CIRCUIT TELEVISION
CKT	CIRCUIT
℄	CENTER LINE
CLF	CURRENT LIMITING FUSE
CLR	CLEAR
CM	CIRCULAR MILS
C.O.	CONDUIT ONLY
COMM	COMMUNICATIONS
CONC	CONCRETE
CONT	CONTINUED
CPT	CONTROL POWER TRANSFORMER
CR	CONTROL RELAY
CT	CURRENT TRANSFORMER
CTRL	CONTROL
CU	COPPER
DDC	DEDICATED DIALER CIRCUIT
DEM	DEMAND
DEMO	DEMOLITION
DIM	DIMENSION
DISC	DISCONNECT
DN	DOWN
DS	DISCONNECT SWITCH
DWG	DRAWING
E	EMPTY, EXISTING
EF	EXHAUST FAN
ELEC	ELECTRICAL
ELEV	ELEVATION, ELEVATOR
EMT	ELECTRICAL METALLIC EMT TUBING
EXIST	EXISTING
F	FAHRENHEIT
FACP	FIRE ALARM CONTROL PANEL
F,FU	FUSE
FLUOR	FLUORESCENT FLUOR
FSA	FIRE SYSTEM ANUNCIATOR
FT	FOOT
FVNR	FULL VOLTAGE NON-REVERSING
G,GRD	GROUND
GA	GAUGE
GALV	GALVANIZED
GFI	GROUND FAULT INTERRUPTER
GRC,GRS	GALVANIZED RIGID STEEL
HH	HANDHOLE
HP	HORSEPOWER
HPS	HIGH PRESSURE SODIUM
HWH	HOT WATER HEATER
IC	INTERRUPTING CAPACITY
J-BOX	JUNCTION BOX
K	KEY OPERATOR
KCM	THOUSAND CIRCULAR MILS
KV	KILOVOLT(S)
KVA	KILOVOLT AMPERE(S)
KVAR	KILOVAR(S)
KVARH	KILOVARHOURS
KW	KILOWATT(S)
KWHR	KILOWATTHOURS
LC	LIGHTING CONTACTOR
LCD	LIQUID CRYSTAL DISPLAY
LED	LIGHT EMITTING DIODE
M	MAGNETIC COIL
MCC	MOTOR CONTROL CENTER
MH	MANHOLE, METAL HALIDE
MIN	MINIMUM
MOV	METAL OXIDE VARISTOR
MPZ	MINI POWER ZONE
MTG	MOUNTING
N	NEUTRAL, NEW
NC	NORMALLY CLOSED
NEMA	NATIONAL ELECTRICAL MANUFACTURERS ASSOCIATION
NEUT	NEUTRAL
NO	NORMALLY OPEN, NUMBER
NP	NAMEPLATE
NREC	NON-RESIDENTIAL ENERGY CODE
ø	PHASE, DIAMETER
P	PANEL, POLE
PB	PUSH-BUTTON
PF	POWER FACTOR
PH	PHASE
PIV	POST INDICATOR VALVE
PNL	PANEL
POMB	POSITION ORIENTED MOGUL BASE (SOCKET)
PS	PRESSURE SWITCH
PSE	PUGET SOUND ENERGY
PVC	POLYVINYL CHLORIDE
R	RELAY
RGS	RIGID GALVANIZED STEEL
RM	ROOM
SCHED	SCHEDULE
SD	SMOKE DETECTOR
SHT	SHEET
SUB	SUBSTATION
SUPV	SUPERVISOR
SW	SWITCH
SYM	SYMMETRICAL
T	THERMOSTAT
TB	TERMINAL BLOCK, TRANSFORMER BANK
TEL	TELEPHONE
THRU	THROUGH
TP	TACOMA POWER
TTB	TELEPHONE TERMINAL BOARD
TYP	TYPICAL
TVSS	TRANSIENT VOLTAGE SURGE SUPPESSOR
UG	UNDERGROUND
UH	UNIT HEATER
UPS	UNINTERRUPTIBLE POWER SUPPLY
V	VOLTMETER, VOLT
W	WIRE, WATT
W/	WITH
WHD	WATTHOUR DEMAND METER
W/O	WITHOUT
WP	WEATHERPROOF
XFMR	TRANSFORMER

GENERAL NOTES

1. CONTRACTOR TO VERIFY ALL WIRING IN VAULTS, PULLBOXES, ETC. WITHIN AREA OF DEMOLITION TO VERIFY IT IS DE-ENERGIZED PRIOR TO PROCEEDING WITH ANY DEMOLITION WORK.
2. SEE GENERAL NOTES ON SHEET G3.2.

Port of Tacoma
P.O. BOX 1837 TACOMA, WA 98401 (253)383-5841

ELCON ASSOCIATES, INC
ENGINEERS - CONSULTANTS
16300 CHRISTENSEN ROAD, SUITE 330
SEATTLE, WASHINGTON 98188
TEL (206) 243-5200
FAX (206) 243-5205

MARK:	REVISION:	BY:	APPR:	DATE:

DMITRIOS K. SAMARAS — STATE OF WASHINGTON — 32979 — REGISTERED PROFESSIONAL ENGINEER — 2/5/15

APPROVED: 2-6-15 — DIRECTOR ENG. DATE

SAB	CHECKED BY	2/5/15 DATE
HAS	PROJ. ENGR	2/5/15 DATE

PRINTED BY: Curtis Feb 05, 2015
PORT ADDRESS: ONE SITCUM PLAZA TACOMA, WA 98401-1837

PIER 4 PHASE 1
REMOVAL ACTION PROJECT
ELECTRICAL SYMBOLS, ABBREVIATIONS AND GENERAL NOTES

E1.1

SH 40 OF 54

CONT/CONS: 069982	TOWNSHIP: 21N	RANGE: 3E	SECTION: 27
M. ID: 091452	DAT-HRZ: WA83-SF	VERT: MLLW 19.39' @ Tide 22 1933	
PHASE: BID	PARCEL:	DRAWING SCALE: AS NOTED	

BINDING EDGE

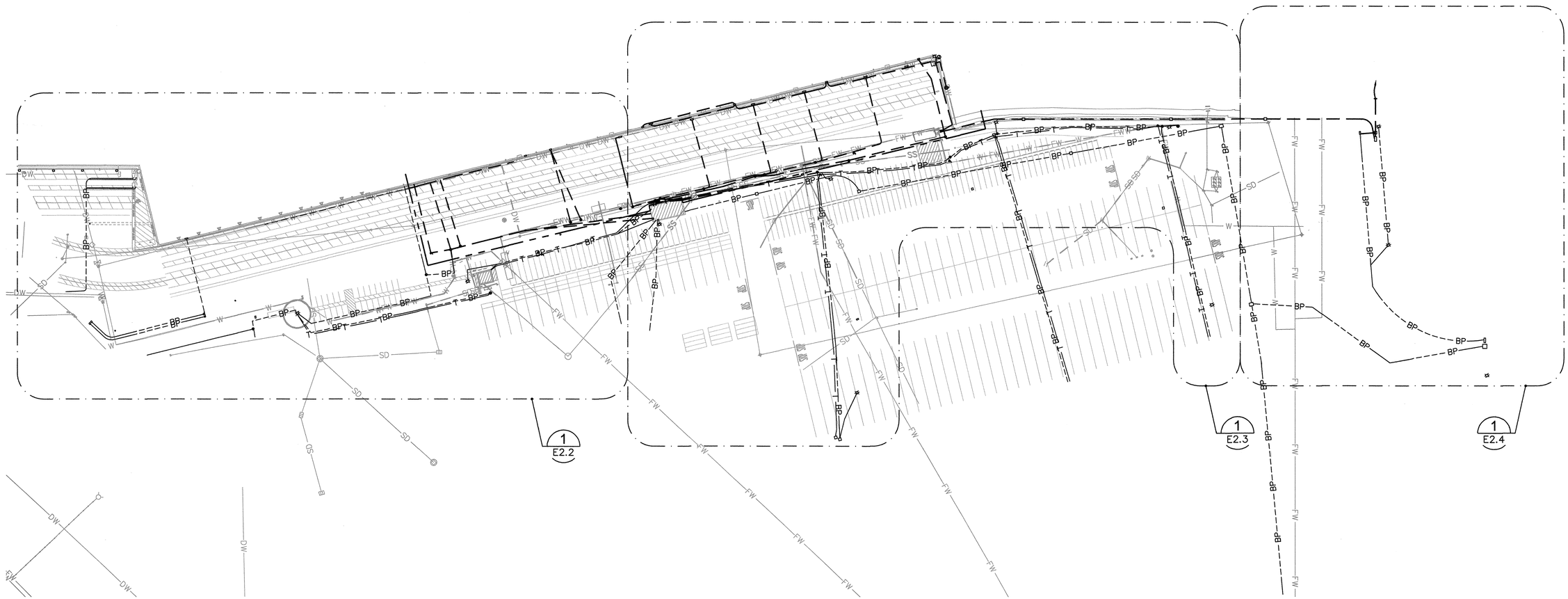

SITE ELECTRICAL DEMOLITION KEY PLAN

SCALE: 1"=100'

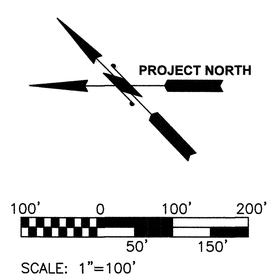

SCALE: 1"=100'

ELCON ASSOCIATES, INC
ENGINEERS - CONSULTANTS
16300 CHRISTENSEN ROAD, SUITE 330
SEATTLE, WASHINGTON 98188
TEL (206) 243-5200
FAX (206) 243-5205

Port of Tacoma
P.O. BOX 1837 TACOMA, WA 98401 (253)383-5841

MARK:	REVISION:	BY:	APPR:	DATE:

DMITRIY K. SLATVINSKIY, STATE OF WASHINGTON, 37197, REGISTERED PROFESSIONAL ENGINEER, 2/5/15

APPROVED: 2-6-15
DIRECTOR ENG. DATE

		SAB	2/5/15
		CHECKED BY	DATE
		HAS	2/5/15
		PROJ. ENGR	DATE
		Curtis Feb 05, 2015	
		PRINTED BY:	
		PORT ADDRESS:ONE SITCUM PLAZA	
		TACOMA, WA 98401-1837	

PIER 4 PHASE 1
REMOVAL ACTION PROJECT
SITE ELECTRICAL DEMOLITION KEY PLAN

E2.1

SH 41 OF 54

CONT/CONS:	069982	TOWNSHIP:	21N	RANGE: 3E	SECTION: 27
M. ID:	091452	DAT-HRZ:	WA83-SF	VERT: MLLW 19.39' @ Tide 22 1933	
PHASE:	BID	PARCEL:		DRAWING SCALE: AS NOTED	

PORT OF TACOMA FILE: R:\5650-041.01\Dwgs\091452-E201

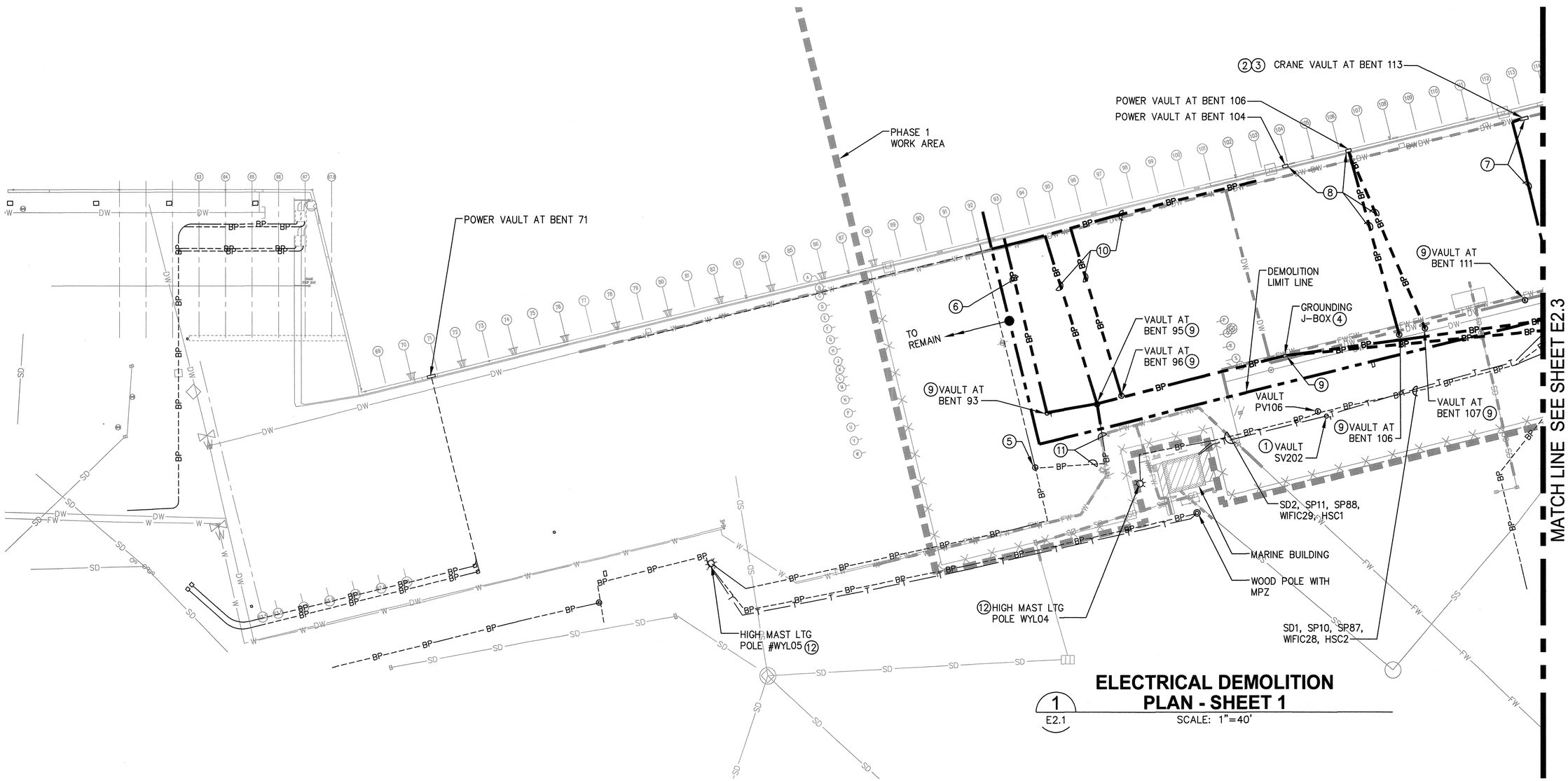

ELECTRICAL DEMOLITION PLAN - SHEET 1

1 / E2.1

SCALE: 1"=40'

KEY NOTES

1. CUT (4) FIBER OPTIC CABLES AND (1) TELEPHONE CABLE WHERE CABLES ENTER SOUTH WALL OF THE VAULT. REMOVE CABLES BETWEEN VAULT AND TERMINATION LOCATION AT COMMUNICATIONS RACK ON SECOND FLOOR OF MARINE BUILDING.
2. COORDINATE WITH TACOMA POWER FOR DISCONNECTING ELECTRICAL SERVICE AT THE PAD-MOUNTED SWITCHGEAR AT SUBSTATION #8410 THAT SERVES THE 1500KVA, 13.8KV-4.16KV TRANSFORMER. SEE SHEET E2.5 FOR THE SWITCHGEAR LOCATION AND SHEET E4.1 FOR THE SUBSTATION #8410 ONE-LINE DIAGRAM.
3. DISCONNECT 5KV CABLES AT CRANE SWITCH AT SUBSTATION #8410 AND DISCONNECT LOAD END OF CABLES AT CRANE VAULT. SEE SHEET E2.5 FOR LOCATION OF 5KV CRANE SWITCH.
4. SEE SHEET E3.5 FOR PROVIDING GROUND ROD IN 480V PULLBOX AT SUBSTATION #8410. AFTER GROUND ROD INSTALLATION AND CONNECTION OF GROUND WIRES TO GROUND ROD, DISCONNECT GROUND WIRES IN GROUNDING J-BOX.
5. AFTER TEMPORARY CONDUIT AND WIRE ARE ROUTED FROM HIGH MAST LIGHTING POLE #WYL04 TO THIS VAULT FOR SERVICE TO HIGH MAST LIGHTING FIXTURES (YARD AND SECURITY), CUT THE EXISTING WIRES IN THE VAULT ROUTED TO HIGH MAST LIGHTING POLE #WYL05 AND SPLICE THE TEMPORARY WIRES TO THE WIRES ROUTED TO POLE #WYL05. SEE SHEET E3.2 FOR TEMPORARY WIRING TO VAULT.
6. REMOVE ABANDONED CONDUIT AND WIRE IN PIER STRUCTURE.
7. REMOVE CRANE VAULT, AND ASSOCIATED CONDUIT AND CABLE IN PIER STRUCTURE. ASSUME VAULT IS 6'x6'x6'.
8. REMOVE ABANDONED POWER VAULT, AND ASSOCIATED CONDUIT AND WIRE IN PIER STRUCTURE. ASSUME VAULT IS 6'x6'x6'.
9. REMOVE VAULT, AND ASSOCIATED DUCTBANKS AS INDICATED. ASSUME VAULT IS 6'x6'x6'.
10. REMOVE ABANDONED CONDUITS, WIRES AND CABLES.
11. REMOVE WIRES FROM DUCTBANK, AND ABANDON DUCTBANK IN PLACE.
12. HIGH MAST LIGHTING FIXTURES TO REMAIN OPERATIONAL EVERY NIGHT. IF CONTRACTOR NEEDS TO SHUTDOWN NORMAL POWER TO THE FIXTURES, CONTRACTOR SHALL SUPPLY BACKUP POWER SUPPLY TO MAINTAIN SERVICE TO THE FIXTURES.

GENERAL NOTES

1. REFER TO CIVIL DRAWINGS FOR WATER, STORM DRAIN, AND SANITARY SEWER UTILITIES.
2. SEE E6 SERIES SHEETS FOR CONDUIT AND WIRE SCHEDULES FOR SPECIFIC INFORMATION PERTAINING TO EACH CONDUIT.
3. ALL CONDUITS/DUCTBANKS WITHIN THE PHASE 1 WORK AREA THAT ARE NOT INDICATED TO BE DISCONNECTED OR REMOVED ARE TO REMAIN IN SERVICE AND PROTECTED IN PLACE.

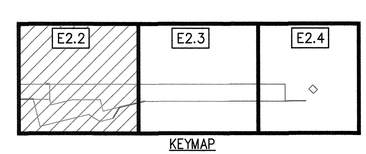

KEYMAP

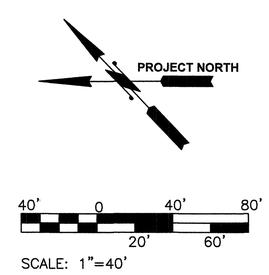

SCALE: 1"=40'

Port of Tacoma
P.O. BOX 1837 TACOMA, WA 98401 (253)383-5841

ELCON ASSOCIATES, INC
ENGINEERS - CONSULTANTS
16300 CHRISTENSEN ROAD, SUITE 330
SEATTLE, WASHINGTON 98188
TEL (206) 243-5022
FAX (206) 243-5205

MARK:	REVISION:	BY:	APPR:	DATE:

DIMITRIOS K. SIARGOS, STATE OF WASHINGTON, REGISTERED PROFESSIONAL ENGINEER, 2/5/15

APPROVED: 2-6-15
DIRECTOR ENG. DATE

SAB	2/5/15		
CHECKED BY	DATE		
HAS	2/5/15		
PROJ. ENGR	DATE		
PRINTED BY: Curtis Feb 05, 2015			
PORT ADDRESS: ONE SITCUM PLAZA TACOMA, WA 98401-1837			

PIER 4 PHASE 1
REMOVAL ACTION PROJECT
ELECTRICAL DEMOLITION PLAN - SHEET 1

E2.2
SH 42 OF 54

CONT/CONS: 069982	TOWNSHIP: 21N	RANGE: 3E	SECTION: 27
M. ID: 091452	DAT-HRZ: WA83-SF	VERT: MLLW 19.39' @ Tide 22 1933	
PHASE: BID	PARCEL:	DRAWING SCALE: AS NOTED	

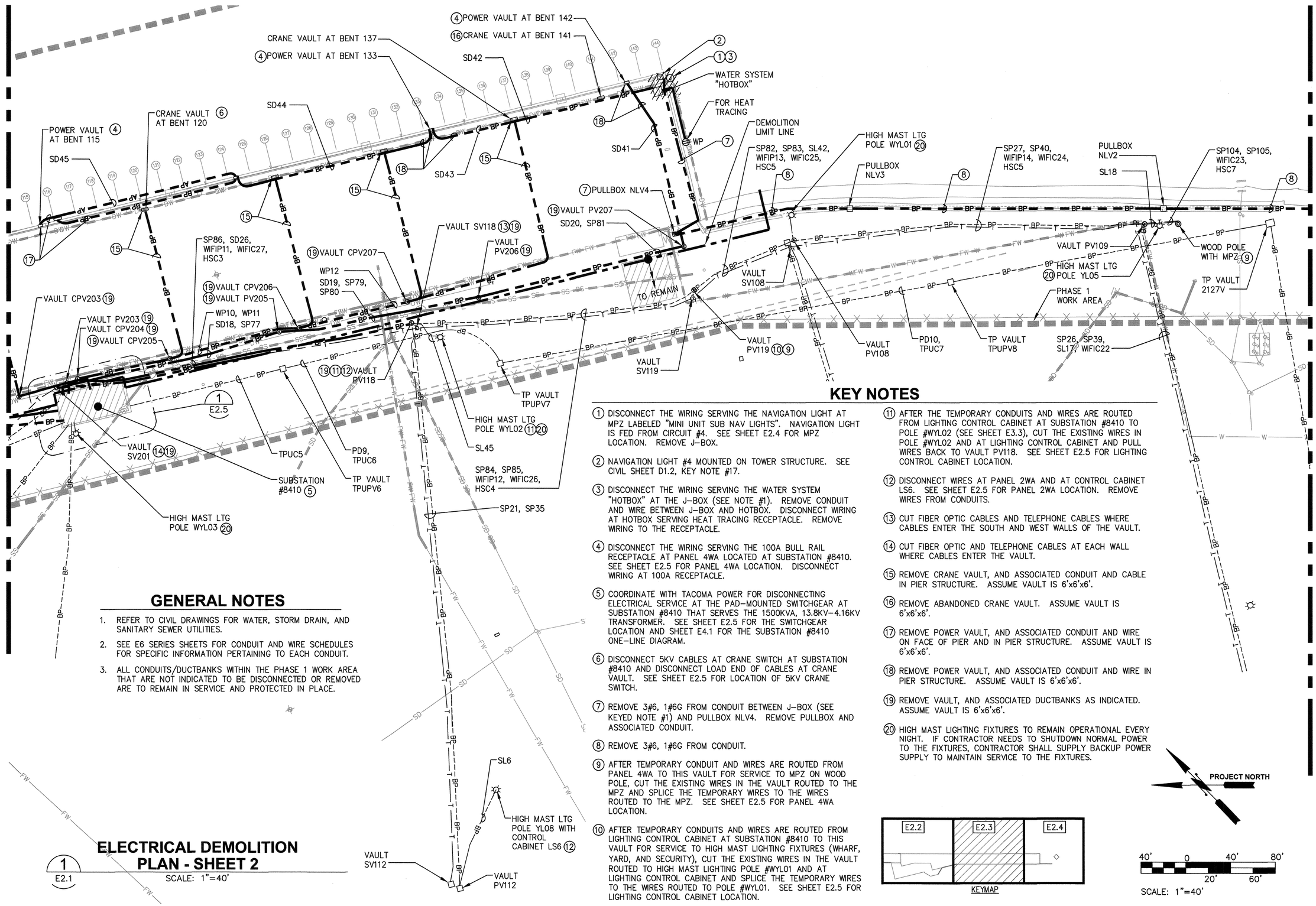

GENERAL NOTES

1. REFER TO CIVIL DRAWINGS FOR WATER, STORM DRAIN, AND SANITARY SEWER UTILITIES.
2. SEE E6 SERIES SHEETS FOR CONDUIT AND WIRE SCHEDULES FOR SPECIFIC INFORMATION PERTAINING TO EACH CONDUIT.
3. ALL CONDUITS/DUCTBANKS WITHIN THE PHASE 1 WORK AREA THAT ARE NOT INDICATED TO BE DISCONNECTED OR REMOVED ARE TO REMAIN IN SERVICE AND PROTECTED IN PLACE.

KEY NOTES

1. DISCONNECT THE WIRING SERVING THE NAVIGATION LIGHT AT MPZ LABELED "MINI UNIT SUB NAV LIGHTS". NAVIGATION LIGHT IS FED FROM CIRCUIT #4. SEE SHEET E2.4 FOR MPZ LOCATION. REMOVE J-BOX.
2. NAVIGATION LIGHT #4 MOUNTED ON TOWER STRUCTURE. SEE CIVIL SHEET D1.2, KEY NOTE #17.
3. DISCONNECT THE WIRING SERVING THE WATER SYSTEM "HOTBOX" AT THE J-BOX (SEE NOTE #1). REMOVE CONDUIT AND WIRE BETWEEN J-BOX AND HOTBOX. DISCONNECT WIRING AT HOTBOX SERVING HEAT TRACING RECEPTACLE. REMOVE WIRING TO THE RECEPTACLE.
4. DISCONNECT THE WIRING SERVING THE 100A BULL RAIL RECEPTACLE AT PANEL 4WA LOCATED AT SUBSTATION #8410. SEE SHEET E2.5 FOR PANEL 4WA LOCATION. DISCONNECT WIRING AT 100A RECEPTACLE.
5. COORDINATE WITH TACOMA POWER FOR DISCONNECTING ELECTRICAL SERVICE AT THE PAD-MOUNTED SWITCHGEAR AT SUBSTATION #8410 THAT SERVES THE 1500KVA, 13.8KV-4.16KV TRANSFORMER. SEE SHEET E2.5 FOR THE SWITCHGEAR LOCATION AND SHEET E4.1 FOR THE SUBSTATION #8410 ONE-LINE DIAGRAM.
6. DISCONNECT 5KV CABLES AT CRANE SWITCH AT SUBSTATION #8410 AND DISCONNECT LOAD END OF CABLES AT CRANE VAULT. SEE SHEET E2.5 FOR LOCATION OF 5KV CRANE SWITCH.
7. REMOVE 3#6, 1#6G FROM CONDUIT BETWEEN J-BOX (SEE KEYED NOTE #1) AND PULLBOX NLV4. REMOVE PULLBOX AND ASSOCIATED CONDUIT.
8. REMOVE 3#6, 1#6G FROM CONDUIT.
9. AFTER TEMPORARY CONDUIT AND WIRES ARE ROUTED FROM PANEL 4WA TO THIS VAULT FOR SERVICE TO MPZ ON WOOD POLE, CUT THE EXISTING WIRES IN THE VAULT ROUTED TO THE MPZ AND SPLICE THE TEMPORARY WIRES TO THE WIRES ROUTED TO THE MPZ. SEE SHEET E2.5 FOR PANEL 4WA LOCATION.
10. AFTER TEMPORARY CONDUITS AND WIRES ARE ROUTED FROM LIGHTING CONTROL CABINET AT SUBSTATION #8410 TO THIS VAULT FOR SERVICE TO HIGH MAST LIGHTING FIXTURES (WHARF, YARD, AND SECURITY), CUT THE EXISTING WIRES IN THE VAULT ROUTED TO HIGH MAST LIGHTING POLE #WYL01 AND AT LIGHTING CONTROL CABINET AND SPLICE THE TEMPORARY WIRES TO THE WIRES ROUTED TO POLE #WYL01. SEE SHEET E2.5 FOR LIGHTING CONTROL CABINET LOCATION.
11. AFTER THE TEMPORARY CONDUITS AND WIRES ARE ROUTED FROM LIGHTING CONTROL CABINET AT SUBSTATION #8410 TO POLE #WYL02 (SEE SHEET E3.3), CUT THE EXISTING WIRES IN POLE #WYL02 AND AT LIGHTING CONTROL CABINET AND PULL WIRES BACK TO VAULT PV118. SEE SHEET E2.5 FOR LIGHTING CONTROL CABINET LOCATION.
12. DISCONNECT WIRES AT PANEL 2WA AND AT CONTROL CABINET LS6. SEE SHEET E2.5 FOR PANEL 2WA LOCATION. REMOVE WIRES FROM CONDUITS.
13. CUT FIBER OPTIC CABLES AND TELEPHONE CABLES WHERE CABLES ENTER THE SOUTH AND WEST WALLS OF THE VAULT.
14. CUT FIBER OPTIC AND TELEPHONE CABLES AT EACH WALL WHERE CABLES ENTER THE VAULT.
15. REMOVE CRANE VAULT, AND ASSOCIATED CONDUIT AND CABLE IN PIER STRUCTURE. ASSUME VAULT IS 6'x6'x6'.
16. REMOVE ABANDONED CRANE VAULT. ASSUME VAULT IS 6'x6'x6'.
17. REMOVE POWER VAULT, AND ASSOCIATED CONDUIT AND WIRE ON FACE OF PIER AND IN PIER STRUCTURE. ASSUME VAULT IS 6'x6'x6'.
18. REMOVE POWER VAULT, AND ASSOCIATED CONDUIT AND WIRE IN PIER STRUCTURE. ASSUME VAULT IS 6'x6'x6'.
19. REMOVE VAULT, AND ASSOCIATED DUCTBANKS AS INDICATED. ASSUME VAULT IS 6'x6'x6'.
20. HIGH MAST LIGHTING FIXTURES TO REMAIN OPERATIONAL EVERY NIGHT. IF CONTRACTOR NEEDS TO SHUTDOWN NORMAL POWER TO THE FIXTURES, CONTRACTOR SHALL SUPPLY BACKUP POWER SUPPLY TO MAINTAIN SERVICE TO THE FIXTURES.

KEYMAP

ELECTRICAL DEMOLITION PLAN - SHEET 2

1 / E2.1

SCALE: 1"=40'

Port of Tacoma
P.O. BOX 1837 TACOMA, WA 98401 (253)383-5841

ELCON ASSOCIATES, INC
ENGINEERS - CONSULTANTS
16300 CHRISTENSEN ROAD, SUITE 330
SEATTLE, WASHINGTON 98188
TEL (206) 243-5022
FAX (206) 243-5205

MARK:	REVISION:	BY:	APPR:	DATE:

DIMITRIOS K. SIMIRIOTIS, STATE OF WASHINGTON, 22275, REGISTERED PROFESSIONAL ENGINEER — 2/5/15

SAB	CHECKED BY	2/5/15 DATE
HAS	PROJ. ENGR	2/5/15 DATE

APPROVED: 2-6-15
DIRECTOR ENG. DATE

PRINTED BY: Curtis Feb 05, 2015
PORT ADDRESS: ONE SITCUM PLAZA TACOMA, WA 98401-1837

PIER 4 PHASE 1 REMOVAL ACTION PROJECT

ELECTRICAL DEMOLITION PLAN - SHEET 2

TOWNSHIP: 21N	RANGE: 3E	SECTION: 27	
DAT-HRZ: WA83-SF	VERT: MLLW 19.39' @ Tide 22 1933		
PARCEL:	DRAWING SCALE: AS NOTED		

E2.3
SH 43 OF 54

CONT/CONS: 069982
M. ID: 091452
PHASE: BID

BINDING EDGE

PORT OF TACOMA FILE: R:\5650-041.01\Dwgs\091452-E203

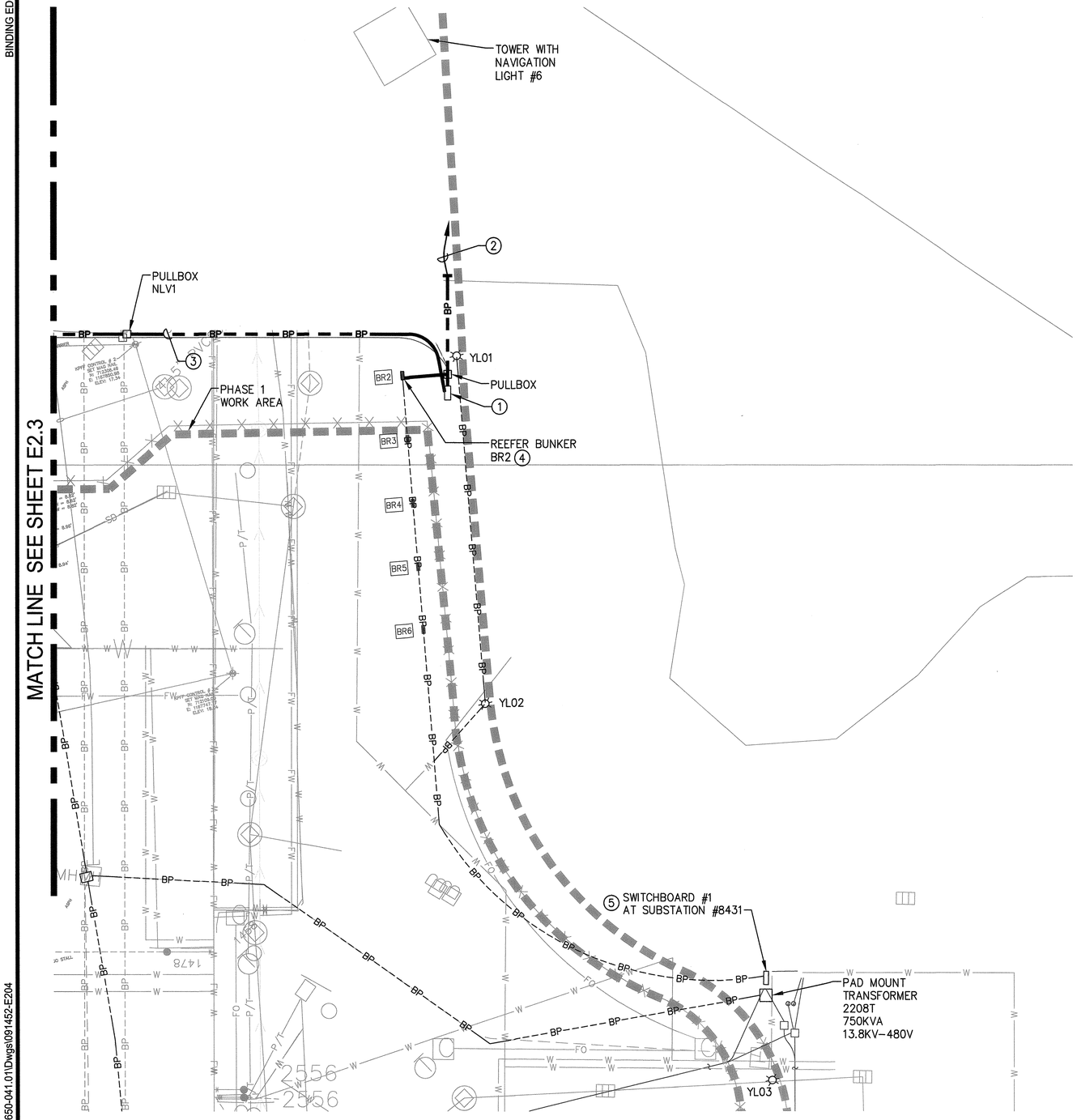

GENERAL NOTES

1. REFER TO CIVIL DRAWINGS FOR WATER, STORM DRAIN, AND SANITARY SEWER UTILITIES.

KEY NOTES

1. MPZ LABELED "MINI UNIT SUB. NAV. LIGHTS".
2. DISCONNECT THE WIRING SERVING THE NAVIGATION LIGHT AT MPZ, CIRCUIT #6. REMOVE SUBMARINE CABLE/WIRE BACK TO MPZ. CUT EXPOSED CONDUIT AT GRADE AND CAP.
3. REMOVE 3#6, 1#6G FROM CONDUIT.
4. REMOVE THE EXISTING FEEDER WIRES BACK TO REEFER BUNKER #BR2, AND DISCONNECT THE FEEDER TO REEFER BUNKER #BR2 AT SWITCHBOARD #1 AND REMOVE BACK TO SWITCHBOARD. REMOVE REEFER OUTLET ASSEMBLY AND STORE FOR FUTURE RE-INSTALLATION. EXCAVATE AS REQUIRED TO REMOVE CONDUIT ELBOWS AND CAP CONDUITS FOR FUTURE USE.
5. CONTRACTOR TO USE SPARE CIRCUIT BREAKER IN SWITCHBOARD FOR TEMPORARY POWER TO SERVE CONSTRUCTION TRAILERS. COORDINATE WITH TACOMA POWER FOR UTILITY METER REQUIREMENTS AND WITH PORT OF TACOMA.

1 E2.1

ELECTRICAL DEMOLITION PLAN - SHEET 3

SCALE: 1"=40'

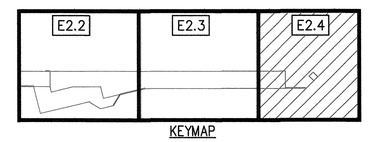

KEYMAP

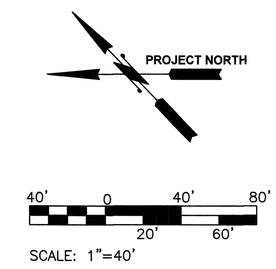

SCALE: 1"=40'

Port of Tacoma
P.O. BOX 1837 TACOMA, WA 98401 (253)383-5841

ELCON ASSOCIATES, INC
ENGINEERS - CONSULTANTS
16300 CHRISTENSEN ROAD, SUITE 330
SEATTLE, WASHINGTON 98188
TELEPHONE (206) 243-0572
FAX (206) 243-5205

MARK:	REVISION:	BY:	APPR:	DATE:

DMITRIOS K. SANTORALIS, STATE OF WASHINGTON, REGISTERED PROFESSIONAL ENGINEER, 22193

APPROVED: 2-6-15
DIRECTOR ENG. DATE

SAB		2/5/15
CHECKED BY		DATE
HAS		2/5/15
PROJ. ENGR		DATE

PRINTED BY: Curtis Feb 05, 2015
PORT ADDRESS: ONE SITCUM PLAZA TACOMA, WA 98401-1837

PIER 4 PHASE 1
REMOVAL ACTION PROJECT
ELECTRICAL DEMOLITION PLAN - SHEET 3

E2.4
SH 44 OF 54

CONT/CONS: 069982	TOWNSHIP: 21N	RANGE: 3E	SECTION: 27
M. ID: 091452	DAT-HRZ: WA83-SF	VERT: MLLW 19.39' @ Tide 22 1933	
PHASE: BID	PARCEL:	DRAWING SCALE: AS NOTED	

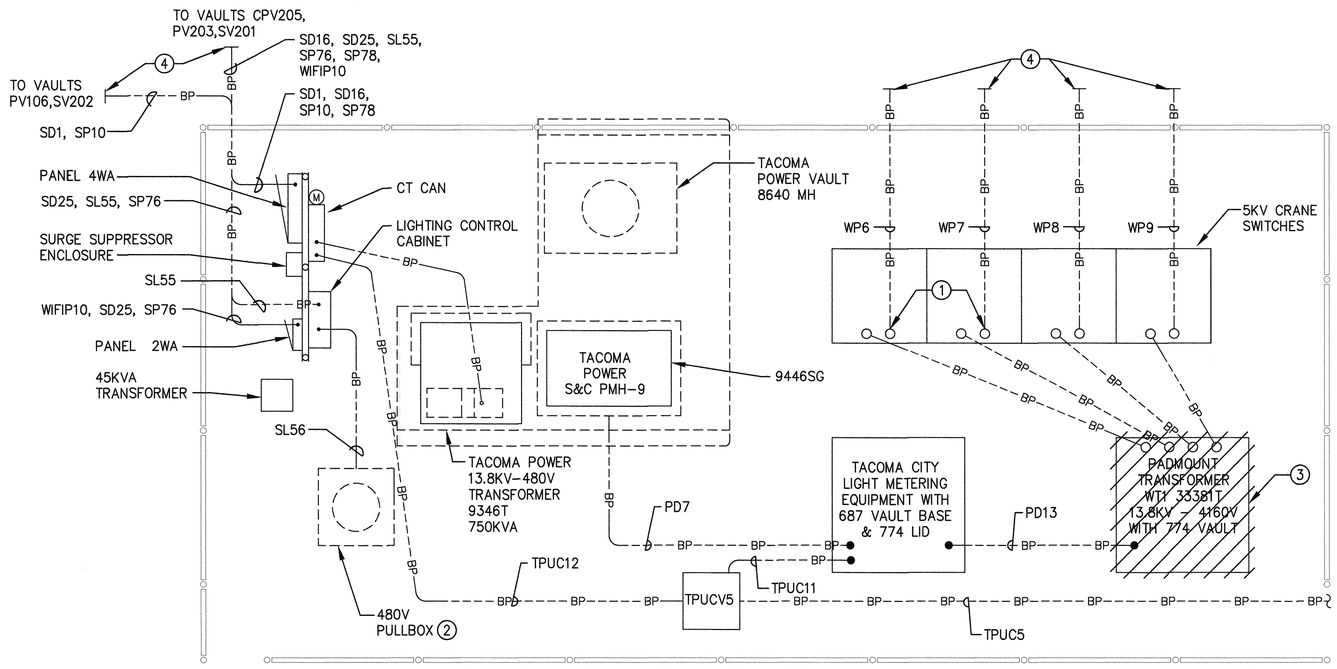

ENLARGED ELECTRICAL DEMOLITION PLAN - SUBSTATION #8410

1 / E2.3

NO SCALE

GENERAL NOTES

1. SEE E6 SERIES SHEETS FOR CONDUIT AND WIRE SCHEDULES FOR SPECIFIC INFORMATION PERTAINING TO EACH CONDUIT.
2. ALL CONDUITS/DUCTBANKS WITHIN THE PHASE 1 WORK AREA THAT ARE NOT INDICATED TO BE DISCONNECTED OR REMOVED ARE TO REMAIN IN SERVICE AND PROTECTED IN PLACE.

KEY NOTES

1. DISCONNECT 5KV CABLES AT CRANE SWITCH.
2. AFTER TEMPORARY CONDUIT AND WIRE ARE ROUTED FROM LIGHTING CONTROL CABINET AT SUBSTATION #8410 FOR HIGH MAST LIGHTING FIXTURES (YARD AND SECURITY) AT POLE #WYL05, DISCONNECT SPLICE IN THE 480V PULLBOX.
3. TACOMA POWER TO DISCONNECT AND REMOVE PAD MOUNTED TRANSFORMER.
4. AFTER REMOVAL OF WIRE FROM THESE CONDUITS PER KEY NOTES ON SHEETS E2.2 AND E2.3, CUT CONDUITS AT THESE LOCATIONS AND ABANDON IN PLACE.

Port of Tacoma
P.O. BOX 1837 TACOMA, WA 98401 (253)383-5841

ELCON ASSOCIATES, INC
ENGINEERS - CONSULTANTS
16300 CHRISTENSEN ROAD, SUITE 330
SEATTLE, WASHINGTON 98188
TEL (206) 243-5022
FAX (206) 243-5205

MARK:	REVISION:	BY:	APPR:	DATE:

DMITRIOS K. SANTORELLIS, STATE OF WASHINGTON, REGISTERED PROFESSIONAL ENGINEER, 22933, 2/5/15

PIER 4 PHASE 1
REMOVAL ACTION PROJECT
ENLARGED ELECTRICAL DEMOLITION PLAN
SUBSTATION #8410

APPROVED: 2-6-15
DIRECTOR ENG. DATE

SAB 2/5/15
CHECKED BY DATE
HAS 2/5/15
PROJ. ENGR DATE
PRINTED BY: Curtis Feb 05, 2015
PORT ADDRESS: ONE SITCUM PLAZA TACOMA, WA 98401-1837

E2.5

SH 45 OF 54

CONT/CONS: 069982	TOWNSHIP: 21N	RANGE: 3E	SECTION: 27
M. ID: 091452	DAT-HRZ: WA83-SF	VERT: MLLW 19.39' @ Tide 22 1933	
PHASE: BID	PARCEL:	DRAWING SCALE: AS NOTED	

BINDING EDGE

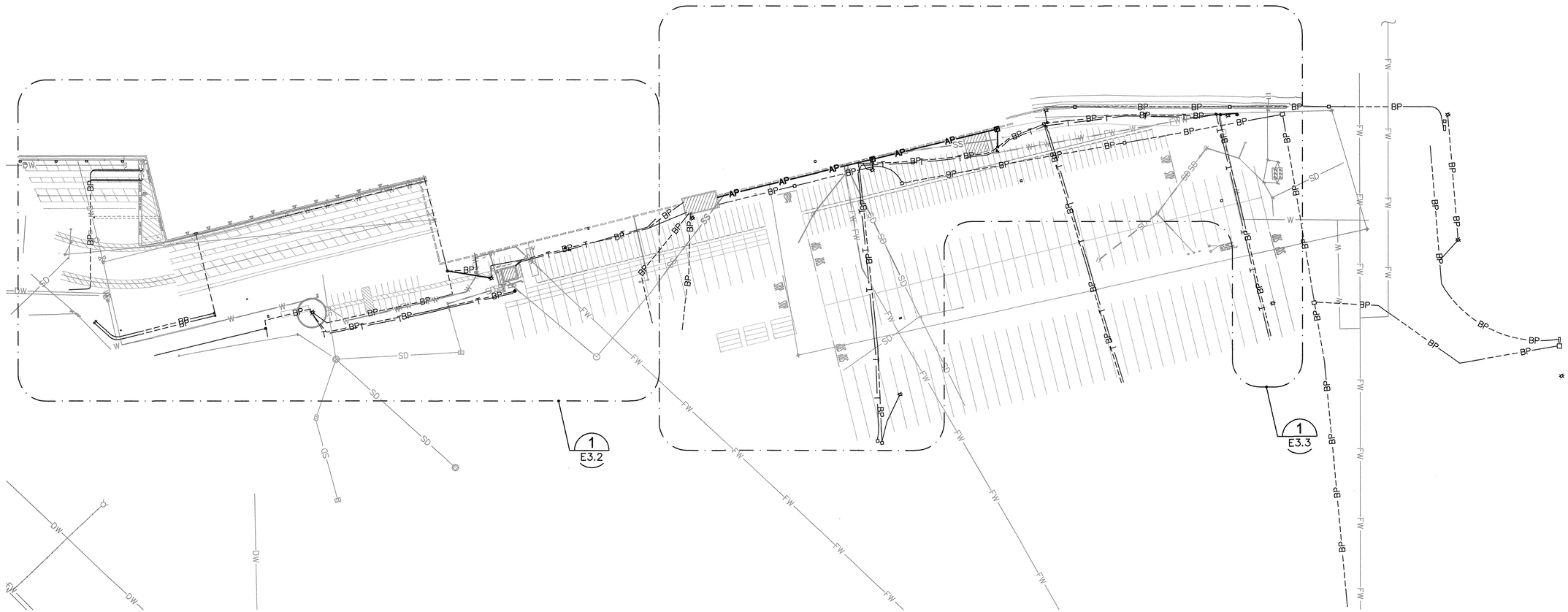

SITE ELECTRICAL KEY PLAN

SCALE: 1"=100'

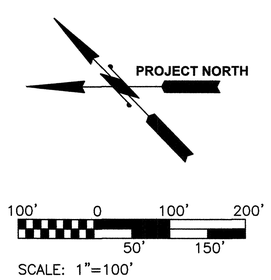

SCALE: 1"=100'

ELCON ASSOCIATES, INC
ENGINEERS - CONSULTANTS
16300 CHRISTENSEN ROAD, SUITE 330
SEATTLE, WASHINGTON 98188
TEL (206) 243-5200
FAX (206) 243-5205

Port of Tacoma
P.O. BOX 1837 TACOMA, WA 98401 (253)383-5841

MARK:	REVISION:	BY:	APPR:	DATE:

DIMITRIOS K. SIAKAVELLIS, STATE OF WASHINGTON, 23799, REGISTERED PROFESSIONAL ENGINEER, 2/5/15

APPROVED: 2-6-15
DIRECTOR ENG. DATE

PIER 4 PHASE 1
REMOVAL ACTION PROJECT
SITE ELECTRICAL KEY PLAN

TOWNSHIP: 21N	RANGE: 3E	SECTION: 27	
DAT-HRZ: WA83-SF	VERT: MLLW 19.39' @ Tide 22 1933		
PARCEL:	DRAWING SCALE: AS NOTED		

SAB 2/5/15 CHECKED BY DATE
HAS 2/5/15 PROJ. ENGR DATE
PRINTED BY: Curtis Feb 05, 2015
PORT ADDRESS: ONE SITCUM PLAZA TACOMA, WA 98401-1837

E3.1
SH 46 OF 54

CONT/CONS: 069982
M. ID: 091452
PHASE: BID

PORT OF TACOMA FILE: R:\5650-041.01\Dwgs\091452-E301

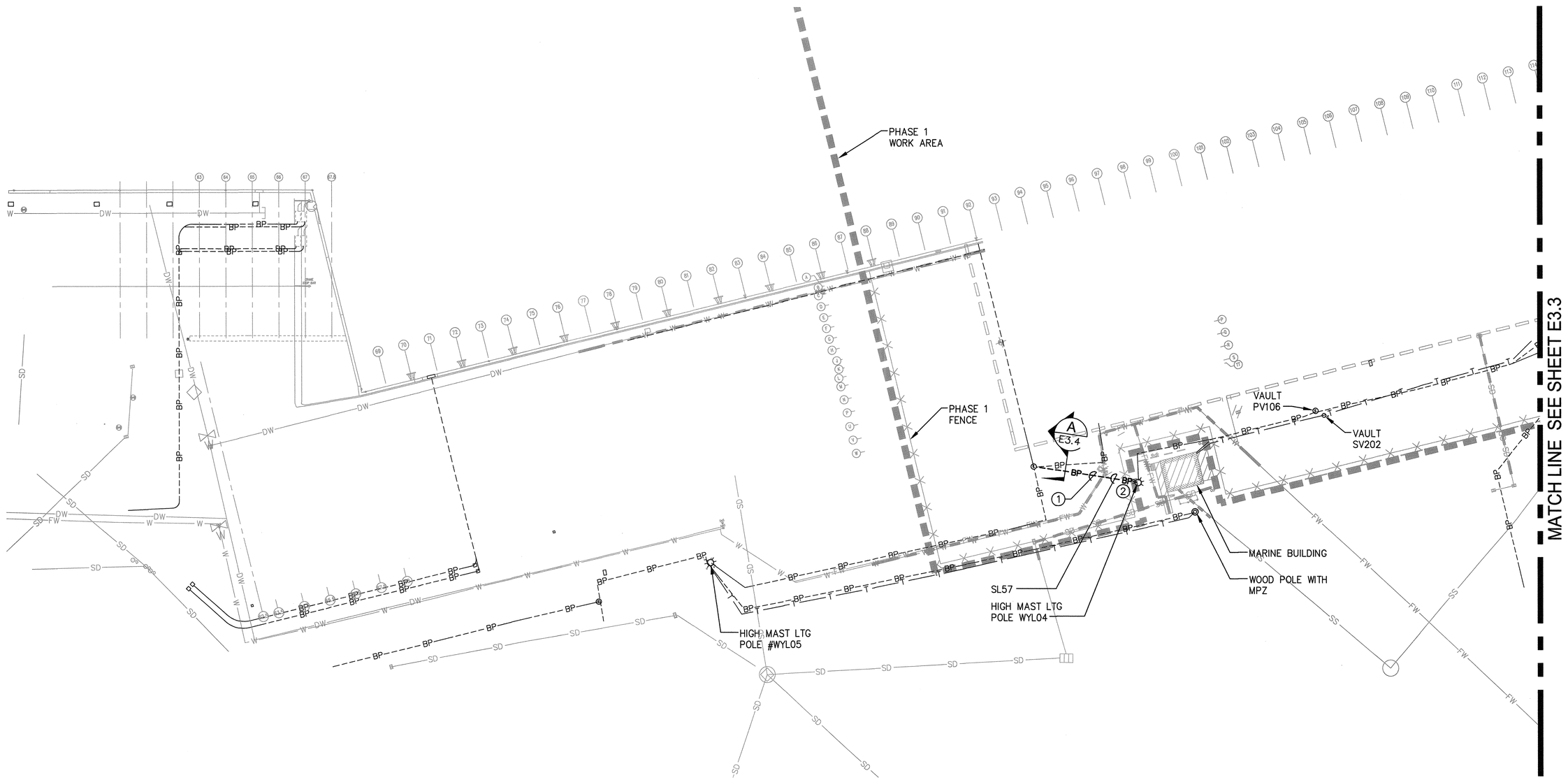

KEY NOTES

1. ROUTE CONDUIT FROM EXISTING MANHOLE TO HIGH MAST LIGHTING POLE #WYL04. EXTEND CONDUIT UP THE SIDE OF THE CONCRETE POLE BASE TO A CONDULET AT THE TOP OF CONCRETE BASE. PROVIDE 2" CONDUIT FROM CONDULET TO BENEATH LIGHTING POLE BASEPLATE AND TERMINATE WITH A GROUNDING BUSHING. SPLICE THE WIRES FOR YARD AND SECURITY LIGHTING TO THE EXISTING WIRES AT POLE #WYL04. SEE NOTE #5 ON SHEET E2.2 FOR SPLICING WIRES IN VAULT.

2. REFER TO SPECIFICATION SECTION 01 14 00 "WORK RESTRICTIONS" FOR ELECTRICAL WORK IN THIS AREA.

GENERAL NOTES

1. REFER TO CIVIL DRAWINGS FOR WATER, STORM DRAIN, AND SANITARY SEWER UTILITIES.

1 ELECTRICAL PLAN - SHEET 1

E3.1

SCALE: 1"=40'

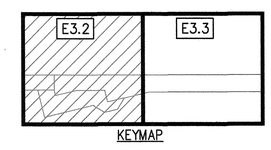

KEYMAP

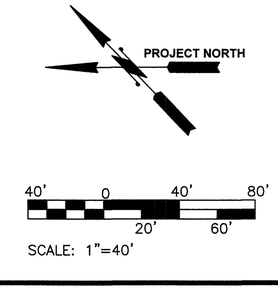

SCALE: 1"=40'

BINDING EDGE

PORT OF TACOMA FILE: R:\5650-041.01\Dwgs\091452-E302

Port of Tacoma
P.O. BOX 1837 TACOMA, WA 98401 (253)383-5841

ELCON ASSOCIATES, INC
ENGINEERS - CONSULTANTS
16300 CHRISTENSEN ROAD, SUITE 330
SEATTLE, WASHINGTON 98188
TEL (206) 244-6072
FAX (206) 243-5205

MARK:	REVISION:	BY:	APPR:	DATE:

DIMITRIS K. SARRAKILIS
STATE OF WASHINGTON
23270
REGISTERED PROFESSIONAL ENGINEER
2/5/15

PIER 4 PHASE 1
REMOVAL ACTION PROJECT
ELECTRICAL PLAN - SHEET 1

APPROVED: 2-6-15
DIRECTOR ENG. DATE

SAB	2/5/15	CHECKED BY	DATE
HAS	2/5/15	PROJ. ENGR	DATE
PRINTED BY: Curtis Feb 05, 2015			
PORT ADDRESS: ONE SITCUM PLAZA TACOMA, WA 98401-1837			

E3.2
SH 47 OF 54

CONT/CONS: 069982	TOWNSHIP: 21N	RANGE: 3E	SECTION: 27
M. ID: 091452	DAT-HRZ: WA83-SF	VERT: MLLW 19.39' @ Tide 22 1933	
PHASE: BID	PARCEL:	DRAWING SCALE: AS NOTED	

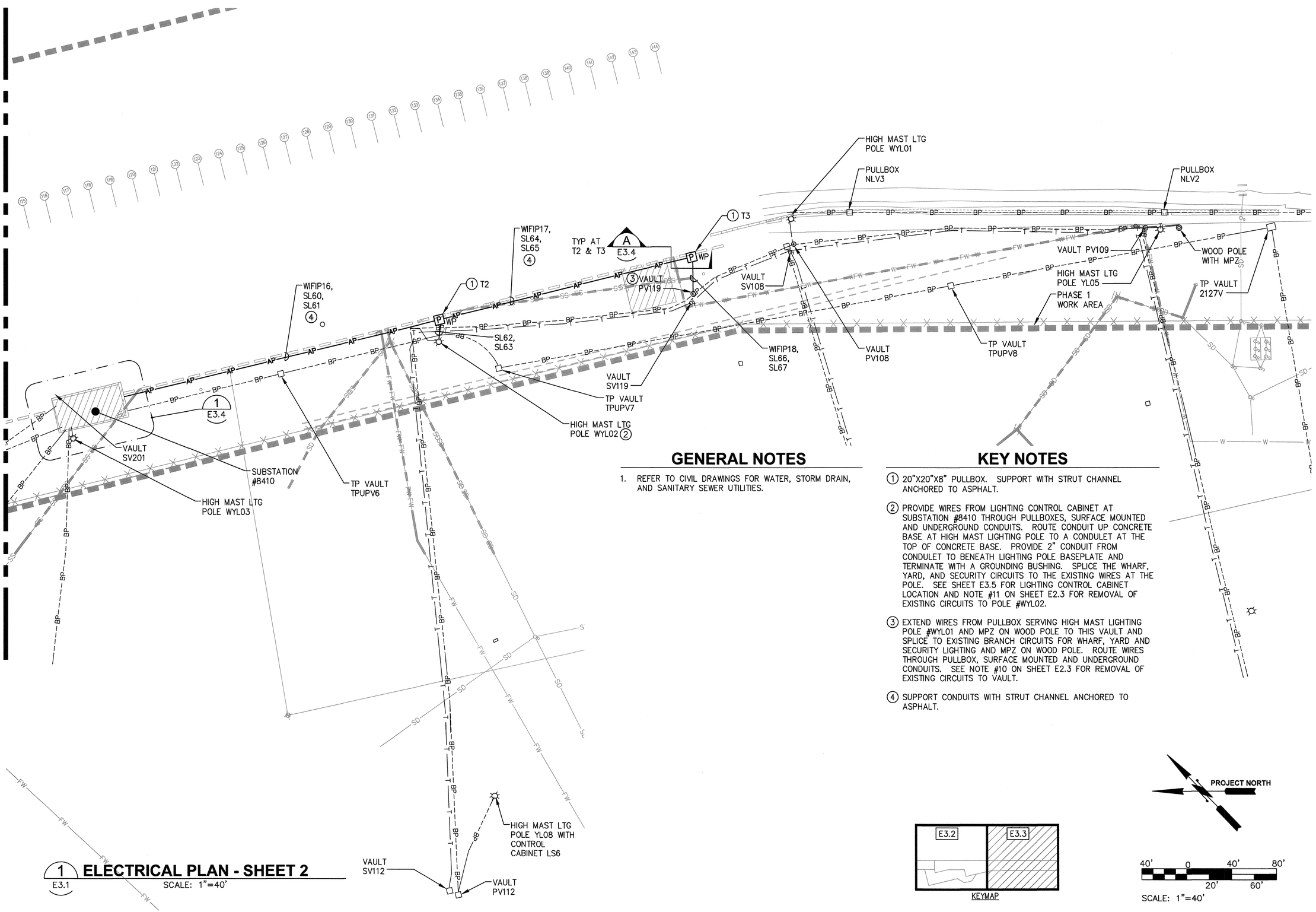

1 ELECTRICAL PLAN - SHEET 2
E3.1 SCALE: 1"=40'

GENERAL NOTES

1. REFER TO CIVIL DRAWINGS FOR WATER, STORM DRAIN, AND SANITARY SEWER UTILITIES.

KEY NOTES

(1) 20"X20"X8" PULLBOX. SUPPORT WITH STRUT CHANNEL ANCHORED TO ASPHALT.

(2) PROVIDE WIRES FROM LIGHTING CONTROL CABINET AT SUBSTATION #8410 THROUGH PULLBOXES, SURFACE MOUNTED AND UNDERGROUND CONDUITS. ROUTE CONDUIT UP CONCRETE BASE AT HIGH MAST LIGHTING POLE TO A CONDULET AT THE TOP OF CONCRETE BASE. PROVIDE 2" CONDUIT FROM CONDULET TO BENEATH LIGHTING POLE BASEPLATE AND TERMINATE WITH A GROUNDING BUSHING. SPLICE THE WHARF, YARD, AND SECURITY CIRCUITS TO THE EXISTING WIRES AT THE POLE. SEE SHEET E3.5 FOR LIGHTING CONTROL CABINET LOCATION AND NOTE #11 ON SHEET E2.3 FOR REMOVAL OF EXISTING CIRCUITS TO POLE #WYL02.

(3) EXTEND WIRES FROM PULLBOX SERVING HIGH MAST LIGHTING POLE #WYL01 AND MPZ ON WOOD POLE TO THIS VAULT AND SPLICE TO EXISTING BRANCH CIRCUITS FOR WHARF, YARD AND SECURITY LIGHTING AND MPZ ON WOOD POLE. ROUTE WIRES THROUGH PULLBOX, SURFACE MOUNTED AND UNDERGROUND CONDUITS. SEE NOTE #10 ON SHEET E2.3 FOR REMOVAL OF EXISTING CIRCUITS TO VAULT.

(4) SUPPORT CONDUITS WITH STRUT CHANNEL ANCHORED TO ASPHALT.

KEYMAP

SCALE: 1"=40'

ELCON ASSOCIATES, INC
ENGINEERS - CONSULTANTS
16300 CHRISTENSEN ROAD, SUITE 330
SEATTLE, WASHINGTON 98188
TEL (206) 243-5000
FAX (206) 243-0205

Port of Tacoma
P.O. BOX 1837 TACOMA, WA 98401 (253)383-5841

MARK:	REVISION:	BY:	APPR:	DATE:

DMITRIOS K. SIMONIS, STATE OF WASHINGTON, 22379, REGISTERED PROFESSIONAL ENGINEER, 2/5/15

	SAB	2/5/15
	CHECKED BY	DATE
	HAS	2/5/15
	PROJ. ENGR	DATE
APPROVED:	Curtis Feb 05, 2015	
2-6-15	PRINTED BY:	
DIRECTOR ENG. DATE	PORT ADDRESS: ONE SITCUM PLAZA TACOMA, WA 98401-1837	

PIER 4 PHASE 1
REMOVAL ACTION PROJECT
ELECTRICAL PLAN - SHEET 2

E3.3
SH 48 OF 54

CONT/CONS: 069982	TOWNSHIP: 21N	RANGE: 3E	SECTION: 27
M. ID: 091452	DAT-HRZ: WA83-SF	VERT: MLLW 19.39' @ Tide 22 1933	
PHASE: BID	PARCEL:	DRAWING SCALE: AS NOTED	

BINDING EDGE

PORT OF TACOMA FILE: R:\5650-041.01\Dwgs\091452-E303

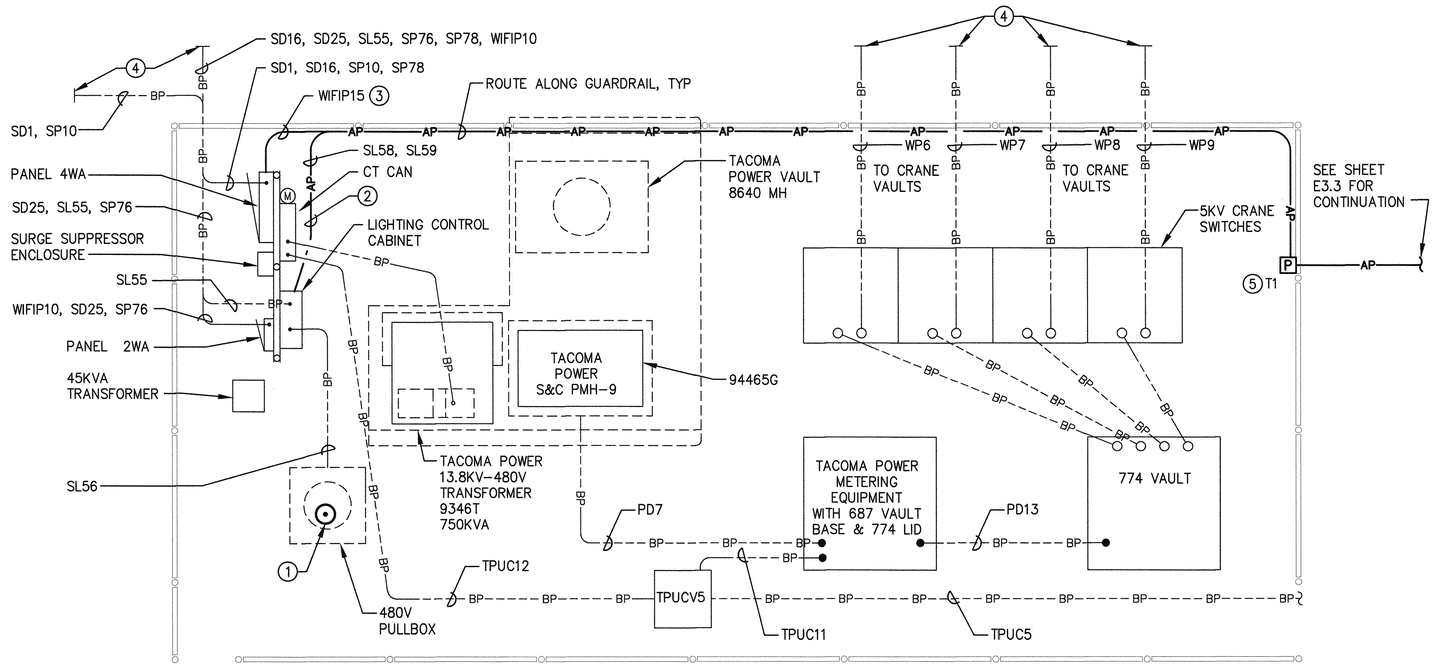

1 ENLARGED ELECTRICAL PLAN - SUBSTATION #8410

E3.3

NO SCALE

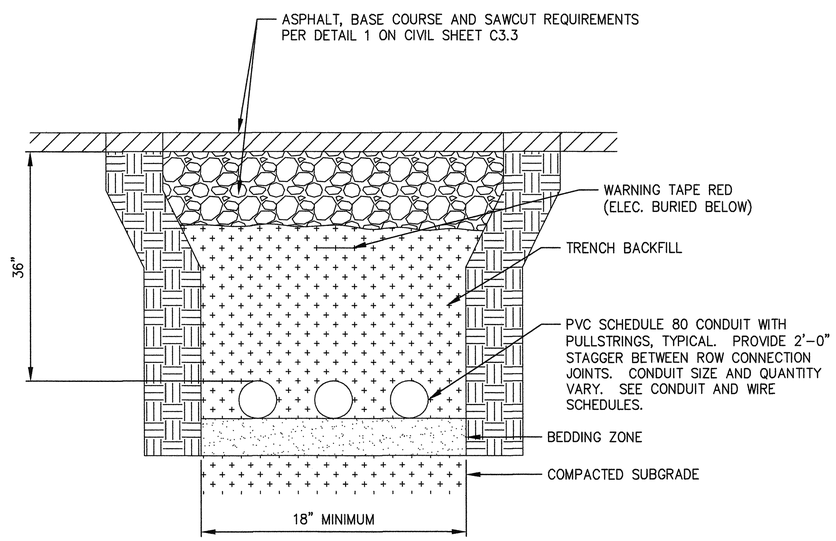

A 600V CONDUIT TRENCHING

E3.2, E3.3

NO SCALE

GENERAL NOTES

1. SEE E6 SERIES SHEETS FOR CONDUIT AND WIRE SCHEDULES FOR SPECIFIC INFORMATION PERTAINING TO EACH CONDUIT.

KEY NOTES

(1) PROVIDE GROUND ROD IN PULLBOX. CUT GROUND WIRES IN "GROUNDING" CONDUIT AND CONNECT ALL AND GROUND WIRES IN PULLBOX TO GROUND ROD WITH MECHANICAL CLAMP.

(2) SEE NOTE #2 ON SHEET E3.3.

(3) SEE NOTE #3 ON SHEET E3.3.

(4) SEE NOTE #4 ON SHEET E2.5 REGARDING THESE CONDUITS.

(5) 20"x20"x8" PULLBOX. SUPPORT WITH STRUT CHANNEL FROM GUARDRAIL STRUCTURE.

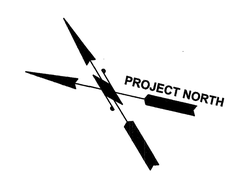

Port of Tacoma
P.O. BOX 1837 TACOMA, WA 98401 (253)383-5841

ELCON ASSOCIATES, INC
ENGINEERS - CONSULTANTS
16300 CHRISTENSEN ROAD, SUITE 330
SEATTLE, WASHINGTON 98188
TEL (206) 243-6202
FAX (206) 243-5205

MARK:	REVISION:	BY:	APPR:	DATE:

DIMITRIOS K. SIAMPERIS, STATE OF WASHINGTON, 22738, REGISTERED PROFESSIONAL ENGINEER, 2/5/15

		SAB	2/5/15
		CHECKED BY	DATE
		HAS	2/5/15
		PROJ. ENGR	DATE
APPROVED:			
2-6-15			
DIRECTOR ENG.	DATE		
PRINTED BY:	Curtis Feb 05, 2015		
PORT ADDRESS:	ONE SITCUM PLAZA TACOMA, WA 98401-1837		

PIER 4 PHASE 1 REMOVAL ACTION PROJECT

ENLARGED ELECTRICAL PLAN

SUBSTATION #8410

E3.4

SH 49 OF 54

CONT/CONS:	069982	TOWNSHIP:	21N
M. ID:	091452	DAT-HRZ:	WA83-SF
PHASE:	BID	PARCEL:	
RANGE:	3E	SECTION:	27
VERT:	MLLW 19.39' @ Tide 22 1933		
DRAWING SCALE:	AS NOTED		

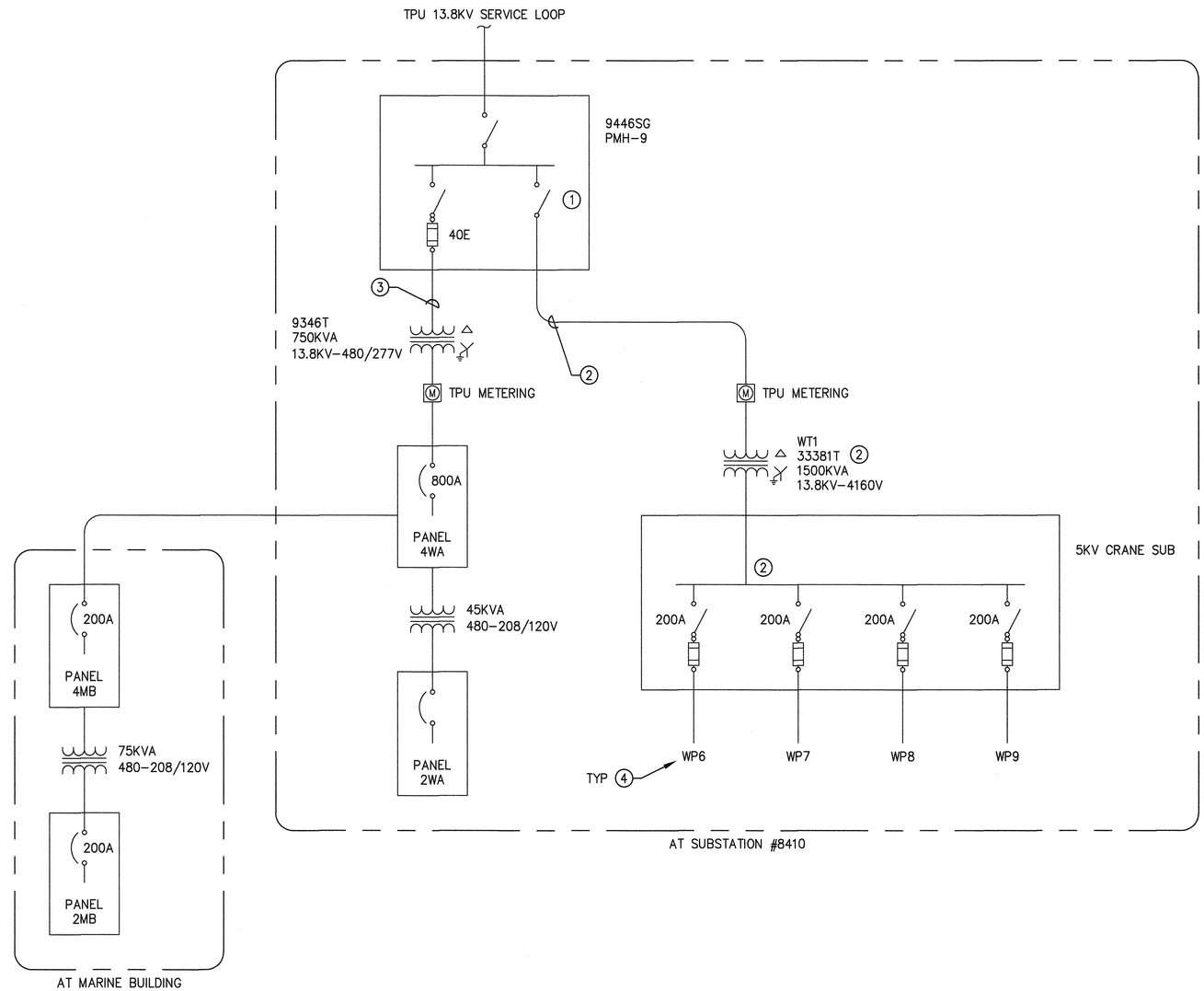

KEY NOTES

1. COORDINATE WITH TPU TO DISCONNECT SWITCH CONNECTION.
2. DISCONNECT WIRING AT SUPPLY AND LOAD CONNECTIONS. WIRING TO BE REMOVED BY ELECTRICAL CONTRACTOR.
3. 13.8KV FEEDER TO 750KVA TRANSFORMER REMAIN IN SERVICE.
4. DISCONNECT WIRING AT SUPPLY AND LOAD CONNECTIONS.

1 DEMOLITION ONE-LINE DIAGRAM

NO SCALE

BINDING EDGE

PORT OF TACOMA FILE: R:\5650-041.01\Dwgs\091452-E401

Port of Tacoma
P.O. BOX 1837 TACOMA, WA 98401 (253)383-5841

ELCON ASSOCIATES, INC
ENGINEERS - CONSULTANTS
16300 CHRISTENSEN ROAD, SUITE 330
SEATTLE, WASHINGTON 98188
TEL (206) 244-6022
FAX (206) 243-5205

MARK:	REVISION:	BY:	APPR:	DATE:

DMITRIOS K. SIAMPALIS, STATE OF WASHINGTON, 22327, REGISTERED PROFESSIONAL ENGINEER, 2/5/15

APPROVED: 2-6-15
DIRECTOR ENG. DATE

SAB	2/5/15	CHECKED BY	DATE
HAS	2/5/15	PROJ. ENGR	DATE
Curtis Feb 05, 2015			
ONE SITCUM PLAZA			
TACOMA, WA 98401-1837			

PRINTED BY:
PORT ADDRESS:

PIER 4 PHASE 1
REMOVAL ACTION PROJECT
DEMOLITION ONE-LINE DIAGRAM

TOWNSHIP: 21N	RANGE: 3E	SECTION: 27	
DAT-HRZ: WA83-SF	VERT: MLLW 19.39' @ Tide 22 1933		
PARCEL:	DRAWING SCALE: AS NOTED		

E4.1
SH 50 OF 54

CONT/CONS: 069982	
M. ID: 091452	
PHASE: BID	

LEGEND

CBC	= OCR COMMUNICATIONS	RV	= REEFER POWER VAULT
CBP	= OCR POWER	SD	= SECONDARY 600V DISTRIBUTION
CP	= CRANE POWER	SL	= SITE LIGHTING
CPV	= CRANE POWER VAULT	SP	= SPARE CONDUIT
CPC	= CHASSIS CAMERA COMMUNICATIONS	SV	= SIGNAL VAULT
CPP	= CHASSIS CAMERA POWER	TPU	= TACOMA PUBLIC UTILITY
GCV	= GATE COMMUNICATIONS VAULT	TPUPV	= TACOMA POWER VAULT
GPV	= GATE POWER VAULT	WG	= WHARF GROUNDING
HSC	= HOMELAND SECURITY CAMERA FIBER	WP	= WHARF PRIMARY 5KV DISTRIBUTION
IC	= INTERCOM COMMUNICATIONS	WPV	= WHARF POWER VAULT
IP	= INTERCOM POWER	WS	= WHARF SECONDARY 600V DISTRIBUTION
PD	= PRIMARY 13.8KV DISTRIBUTION	WIFIC	= WIFI ANTENNA SYSTEM COMMUNICATIONS
PV	= POWER VAULT	WIFIP	= WIFI ANTENNA SYSTEM POWER
Q	= QWEST	NUMBERING	= INDIVIDUAL CONDUIT IDENTIFICATION
QV	= QWEST VAULT	/////	HATCHING INDICATES ITEMS TO BE REMOVED
RR	= REEFER RECEPTACLE		

SCHEDULE KEY NOTES

1. SEE SEPARATE HUSKY TERMINAL WIFI SYSTEM PROJECT DRAWINGS FOR COMMUNICATIONS CONDUCTORS AND SITE PLANS. PORT OF TACOMA JOB #6323-04.
2. PVC SHCEDULE 80.
3. GRS CONDUIT.
4. CONDUIT(S) CUT. ABANDONED IN PLACE.
5. COORDINATE WORK WITH TACOMA POWER.
6. PROVIDE LIQUID TIGHT FLEXIBLE METAL CONDUIT AT ALL LIGHT POLE LOCATIONS.
7. LIQUID TIGHT FLEXIBLE METAL CONDUIT.

SCHEDULE GENERAL NOTES

1. NOT ALL CONDUITS ARE SHOWN ON CONDUIT AND CONDUCTOR SCHEDULES. CONTRACTOR SHALL REFER TO POWER RISER DIAGRAMS AND SUBSTATION LAYOUT PLANS FOR ADDITIONAL CONDUITS AND WIRE.

CONDUIT AND CONDUCTOR SCHEDULE

CONDUIT NUMBER	CONDUIT			CONDUCTOR			FROM	TO	REMARKS
	NO.	SIZE	TYPE	NO.	SIZE	TYPE			
IC1	1	2"	2 3	–	–	–	INTERCOM PEDESTAL #1	VAULT ICV1	
IC2	1	2"	2 3	–	–	–	INTERCOM PEDESTAL #2	VAULT ICV1	
IC3	1	2"	2 3	–	–	–	INTERCOM PEDESTAL #3	VAULT ICV1	
IC4	4	2"	2 3	–	–	–	VAULT ICV1	OUTGATE COMMUNICATIONS ROOM	
IC5	1	2"	2 3	–	–	–	INTERCOM PEDESTAL #4	VAULT ICV1	
IP1	1	1.5"	2 3	2/1	10/10	XHHW-2	INTERCOM PEDESTAL #1	VAULT IPV1	
IP2	1	1.5"	2 3	2/1	10/10	XHHW-2	INTERCOM PEDESTAL #2	VAULT IPV1	
IP3	1	1.5"	2 3	2/1	10/10	XHHW-2	INTERCOM PEDESTAL #3	VAULT IPV1	
IP4	–	–	–	–	–	–	–	–	NOT USED
IP5	1	2"	2 3	2/1	10/10	XHHW-2	TRUCK SCALE	VAULT IPV3	
IP6	1	2"	2 3	2/1	10/10	XHHW-2	VAULT IPV3	PANEL 2G	
IP7	1	1.5"	2 3	4/1	10/10	XHHW-2	VAULT IPV3	PANEL 2G	
IP8	1	1.5"	2 3	2/1	10/10	XHHW-2	INTERCOM PEDESTAL #4	VAULT IPV1	
IP9	1	1.5"	2 3	–	–	–	INTERCOM PEDESTAL #1	VAULT IPV1	
IP10	1	1.5"	2 3	–	–	–	INTERCOM PEDESTAL #2	VAULT IPV1	
IP11	1	1.5"	2 3	–	–	–	INTERCOM PEDESTAL #3	VAULT IPV1	
IP12	1	1.5"	2 3	–	–	–	INTERCOM PEDESTAL #4	VAULT IPV1	
CP1	–	–	–	–	–	–	–	–	NOT USED
CP2	1	1.5"	2 3	–	–	–	VAULT IPV2	CHASIS CAMERA PEDESTAL #1	
CP3	1	1.5"	2 3	–	–	–	VAULT IPV2	CHASIS CAMERA PEDESTAL #2	
CP4	–	–	–	–	–	–	–	–	NOT USED
CP5	4	2"	2 3	–	–	–	VAULT IPV2	PANEL 2G	
CP6	1	1"	2 3	2/1	10/10	XHHW-2	LIGHTING CONTROLLER "OG"	VAULT IPV2	
CP7	–	–	–	–	–	–	–	–	NOT USED
CP8	1	1.5"	2 3	2/1	10/10	XHHW-2	VAULT IPV2	CHASIS CAMERA PEDESTAL #1	
CP9	1	1.5"	2 3	2/1	10/10	XHHW-2	VAULT IPV2	CHASIS CAMERA PEDESTAL #2	
CBC1	1	2"	2 3	–	–	–	VAULT CV1	CHASIS LIGHT PEDESTAL #1	
CBC2	1	2"	2 3	–	–	–	VAULT CV1	CHASIS CAMERA SUPPORT #1	
CBC3	1	2"	2 3	–	–	–	VAULT CV1	VIT #1	
CBC4	1	2"	2 3	–	–	–	VAULT CV2	CHASIS LIGHT PEDESTAL #2	
CBC5	1	2"	2 3	–	–	–	VAULT CV2	CHASIS CAMERA SUPPORT #2	
CBC6	1	2"	2 3	–	–	–	VAULT CV2	VIT #2	
CBC7	1	2"	2 3	–	–	–	VAULT CV3	CHASIS LIGHT PEDESTAL #3	
CBC8	1	2"	2 3	–	–	–	VAULT CV3	CHASIS CAMERA SUPPORT #3	
CBC9	1	2"	2 3	–	–	–	VAULT CV3	VIT #3	
CBC10	1	2"	2 3	–	–	–	VAULT CV4	CHASIS LIGHT PEDESTAL #4	
CBC11	1	2"	2 3	–	–	–	VAULT CV4	CHASIS CAMERA SUPPORT #4	
CBC12	1	2"	2 3	–	–	–	VAULT CV4	VIT #4	
CBC13	2	2"	2 3	–	–	–	VAULT CV4	VAULT CV3	
CBC14	3	2"	2 3	–	–	–	VAULT CV3	VAULT CV2	
CBC15	4	2"	2 3	–	–	–	VAULT CV2	VAULT CV1	
CBC16	4	2"	2 3	–	–	–	VAULT CV1	OUTGATE COMMUNICATIONS ROOM	
CBP1	1	2"	2 3	2/1	10/10	XHHW-2	VAULT CPPV1	CHASIS LIGHT PEDESTAL #1	
CBP2	1	2"	2 3	2/1	10/10	XHHW-2	VAULT CPPV1	CHASIS CAMERA SUPPORT #1	
CBP3	1	2"	2 3	2/1	10/10	XHHW-2	VAULT CPPV1	VIT #1	
CBP4	1	2"	2 3	2/1	10/10	XHHW-2	VAULT CPPV2	CHASIS LIGHT PEDESTAL #2	
CBP5	1	2"	2 3	2/1	10/10	XHHW-2	VAULT CPPV2	CHASIS CAMERA SUPPORT #2	
CBP6	1	2"	2 3	2/1	10/10	XHHW-2	VAULT CPPV2	VIT #2	
CBP7	1	2"	2 3	2/1	10/10	XHHW-2	VAULT CPPV3	CHASIS LIGHT PEDESTAL #3	
CBP8	1	2"	2 3	2/1	10/10	XHHW-2	VAULT CPPV3	CHASIS CAMERA SUPPORT #3	
CBP9	1	2"	2 3	2/1	10/10	XHHW-2	VAULT CPPV3	VIT #3	
CBP10	1	2"	2 3	2/1	10/10	XHHW-2	VAULT CPPV4	CHASIS LIGHT PEDESTAL #4	
CBP11	1	2"	2 3	2/1	10/10	XHHW-2	VAULT CPPV4	CHASIS CAMERA SUPPORT #4	
CBP12	1	2"	2 3	2/1	10/10	XHHW-2	VAULT CPPV4	VIT #4	
CBP13	1	2"	2 3	4/1	10/10	XHHW-2	VAULT CPPV4	VAULT CPV3	
CBP14	1	2"	2 3	4/1	10/10	XHHW-2	VAULT CPPV3	VAULT CPV2	
CBP15	2	2"	2 3	4/1	10/10	XHHW-2	VAULT CPPV2	VAULT CPV1	
CBP16	2	2"	2 3	4/1	10/10	XHHW-2	VAULT CPPV1	PANEL 2GA	
CPC1	–	–	–	–	–	–	–	–	NOT USED
CPC2	2	2"	2 3	–	–	–	VAULT ICV2	CHASIS CAMERA PEDESTAL #1	
CPC3	2	2"	2 3	–	–	–	VAULT ICV2	CHASIS CAMERA PEDESTAL #2	
CPC4	1	2"	2 3	–	–	–	VAULT ICV2	TRUCK SCALE	
CPC5	4	2"	2 3	–	–	–	VAULT ICV2	OUTGATE COMMUNICATIONS ROOM	

CONDUIT AND CONDUCTOR SCHEDULE FOR REFERENCE ONLY

Port of Tacoma
P.O. BOX 1837 TACOMA, WA 98401 (253)383-5841

ELCON ASSOCIATES, INC
ENGINEERS - CONSULTANTS
16300 CHRISTENSEN ROAD, SUITE 330
SEATTLE, WASHINGTON 98188
TEL (206) 243-5020
FAX (206) 243-5205

MARK: REVISION: BY: APPR: DATE:

DIMITRIS K. SKAMPARIS, STATE OF WASHINGTON, REGISTERED PROFESSIONAL ENGINEER, 22127 — 2/5/15

SAB 2/5/15 CHECKED BY DATE
HAS 2/5/15 PROJ. ENGR DATE
APPROVED: 2-6-15 DIRECTOR ENG. DATE
PRINTED BY: Curtis Feb 05, 2015
PORT ADDRESS: ONE SITCUM PLAZA TACOMA, WA 98401-1837

PIER 4 PHASE 1
REMOVAL ACTION PROJECT
CONDUIT AND CONDUCTOR SCHEDULE

E6.1
SH 51 OF 54

TOWNSHIP: 21N RANGE: 3E SECTION: 27
DAT-HRZ: WA83-SF VERT: MLLW 19.39' @ Tide 22 1933
PARCEL: DRAWING SCALE: AS NOTED
CONT/CONS: 069982
M. ID: 091452
PHASE: BID

CONDUIT AND CONDUCTOR SCHEDULE

CONDUIT NUMBER	CONDUIT NO.	CONDUIT SIZE	CONDUIT TYPE	CONDUCTOR NO.	CONDUCTOR SIZE	CONDUCTOR TYPE	FROM	TO	REMARKS
GC1	1	1"	2	–	–	–	GCV1	GCV2	
GC2	1	1"	2	–	–	–	GCV2	GCV3	
GC3	1	1"	2	–	–	–	GCV3	GCV4	
GC4	1	1"	2	–	–	–	GCV4	GATE INTERCOM/CARD READER	
GP1	1	1"	2	3/1	8/10	XHHW-2	GPV1	GPV2	
GP2	1	1"	2	3/1	8/10	XHHW-2	GPV2	GPV3	
GP3	1	1"	2	3/1	8/10	XHHW-2	GPV3	GPV4	
GP4	1	1"	2	3/1	8/10	XHHW-2	GPV4	GATE CONTROLLER	
PD1	6	5"	2	–	–	–	TPUPV1	TPUPV2	
PD2	6	5"	2	–	–	–	TPUPV2	TPUPV3	
PD3	6	5"	2	–	–	–	TPUPV3	TPUPV4	
PD4	6	5"	2	–	–	–	TPUPV4	STUB AT WHARF	
PD5	–	–	–	–	–	–	–	–	NOT USED
PD6	–	–	–	–	–	–	–	–	NOT USED
PD7	2	5"	2 3	–	–	–	EXISTING TCL SWITCH	TCL METERING SECTION	5
PD8	–	–	–	–	–	–	–	–	NOT USED
PD9	4	5"	2	–	–	–	TPUPV6	TPUPV7	
PD10	4	5"	2	–	–	–	TPUPV7	TPUPV8	
PD11	4	5"	2	–	–	–	TPUPV8	RELOCATED VAULT TPUPV5	
PD12	4	5"	2	–	–	–	TPUPV4	TPUPV9	
PD13	2	5"	2 3	–	–	–	TCL METERING SECTION	TRANSFORMER WT1	5
PD14	4	5"	2 3	–	–	–	TPUPV4	NEW WHARF	
PD15	2	5"	2	–	–	–	EXISTING TPU XFMR	TPUPV10	
PD16	2	5"	2	–	–	–	TPUPV10	1500KVA XFMR (SUBSTATION #8411)	
TPUC1	1	4"	2	–	–	–	TPUCV1	TPUCV2	
TPUC2	1	4"	2	–	–	–	TPUCV2	TPUCV3	
TPUC3	1	4"	2	–	–	–	TPUCV3	TPUCV4	
TPUC4	1	4"	2	–	–	–	TPUCV4	TPUCV9	
TPUC5	1	4"	2	–	–	–	TPUCV5	TPUPV6	
TPUC6	1	4"	2	–	–	–	TPUPV6	TPUPV7	
TPUC7	1	4"	2	–	–	–	TPUPV7	TPUPV8	
TPUC8	1	4"	2	–	–	–	TPUPV8	STUBBED AT TPU DUCTBANK	
TPUC9	1	4"	2	–	–	–	STUB AT EXISTING TPU XFMR	TPUCV10	
TPUC10	1	4"	2	–	–	–	TPUCV10	SWITCHBOARD (SUBSTATION #8411)	
TPUC11	1	4"	2 3	–	–	–	TPUCV5	TCL METERING SECTION	
TPUC12	1	4"	2 3	–	–	–	TPUCV5	CT CAN	
RR1	1	2.5"	2 3	3/1	0000/6	XHHW-2	BR1	SWITCHBOARD #8411	
RR2	1	2.5"	2 3	3/1	0000/6	XHHW-2	BR2	BR1	
RR3	1	2.5"	2 3	3/1	0000/6	XHHW-2	BR3	SWITCHBOARD #8411	
RR4	1	2.5"	2 3	3/1	0000/6	XHHW-2	BR4	BR3	
RR5	1	2.5"	2 3	3/1	0000/6	XHHW-2	BR5	BR6	
RR6	1	2.5"	2 3	3/1	0000/6	XHHW-2	BR6	VAULT RV1	
RR7	1	2.5"	2 3	3/1	0000/6	XHHW-2	BR7	VAULT RV1	
RR8	1	2.5"	2 3	3/1	0000/6	XHHW-2	BR8	BR7	
RR9	1	2.5"	2 3	3/1	0000/6	XHHW-2	BR9	VAULT RV1	
RR10	1	2.5"	2 3	3/1	0000/6	XHHW-2	BR10	BR9	
RR11	1	2.5"	2 3	3/1	0000/6	XHHW-2	BR11	VAULT RV1	
RR12	1	2.5"	2 3	3/1	0000/6	XHHW-2	BR12	BR11	
RR13	1	2.5"	2 3	3/1	0000/6	XHHW-2	BR13	BR12	
RR14	1	2.5"	2 3	3/1	0000/6	XHHW-2	BR14	VAULT RV2	
RR15	1	2.5"	2 3	3/1	0000/6	XHHW-2	BR15	VAULT RV2	
RR16	1	2.5"	2 3	3/1	0000/6	XHHW-2	BR16	BR15	
RR17	1	2.5"	2 3	3/1	0000/6	XHHW-2	BR17	VAULT RV2	
RR18	1	2.5"	2 3	3/1	0000/6	XHHW-2	BR18	BR17	
RR19	1	2.5"	2 3	3/1	0000/6	XHHW-2	BR19	VAULT RV2	
RR20	1	2.5"	2 3	3/1	0000/6	XHHW-2	BR20	BR19	
RR21	1	2.5"	2 3	3/1	0000/6	XHHW-2	BR21	VAULT RV2	
RR22	4	2.5"	2	3/1	0000/6	XHHW-2	RV2	VAULT RV1	
RR23	5	2.5"	2	3/1	0000/6	XHHW-2	RV1	SWITCHBOARD #8411	
WG1	1	1"	3	1	4	BARE CU	CRANE RAIL	CRANE RAIL	
WG2	1	1"	3	1	4	BARE CU	CRANE RAIL	CRANE RAIL	
WG3	1	1"	3	1	4	BARE CU	CRANE RAIL	CRANE RAIL	
WP1	1	4"	2 3	–	–	–	CPV1	PV202	PIER 3
WP2	1	4"	2 3	–	–	–	CPV2	PV202	
WP3	1	4"	2 3	–	–	–	CPV3	PV202	
WP4	1	4"	2 3	–	–	–	CPV4	PV202	
WP5	6	4"	2	–	–	–	PV202	PV201	
WP6	1	4"	2 3	3/1	0000/0000	5KV/600V	5KV SWITCHES	CPV205	4
WP7	1	4"	2 3	3/1	0000/0000	5KV/600V	5KV SWITCHES	CPV205	
WP8	1	4"	2 3	–	–	–	5KV SWITCHES	CPV205	
WP9	1	4"	2 3	–	–	–	5KV SWITCHES	CPV205	
~~WP10~~	~~1~~	~~4"~~	~~2~~	~~3/1~~	~~0000/0000~~	~~5KV/600V~~	~~CPV205~~	~~CPV206~~	
~~WP11~~	~~1~~	~~4"~~	~~2~~	~~–~~	~~–~~	~~–~~	~~CPV205~~	~~CPV206~~	
~~WP12~~	~~1~~	~~4"~~	~~2~~	~~3/1~~	~~0000/0000~~	~~5KV/600V~~	~~CPV205~~	~~CPV207~~	

CONDUIT AND CONDUCTOR SCHEDULE

CONDUIT NUMBER	CONDUIT NO.	CONDUIT SIZE	CONDUIT TYPE	CONDUCTOR NO.	CONDUCTOR SIZE	CONDUCTOR TYPE	FROM	TO	REMARKS
HSC1	1	4"	2	–	–	–	T4 MARINE BUILDING	SV202	
HSC2	1	4"	2	–	–	–	SV202	SV201	4
~~HSC3~~	~~1~~	~~4"~~	~~2~~	~~–~~	~~–~~	~~–~~	~~SV201~~	~~SV118~~	
HSC4	1	4"	2	–	–	–	SV118	SV119	4
HSC5	1	4"	2	–	–	–	SV119	SV108	
HSC6	1	4"	2	–	–	–	SV108	SV109	
HSC7	1	2"	2	–	–	–	SV109	CAMERA ON WOOD POLE	
WIFIC1	2	4"	2	–	–	–	HUSKY ADMIN. BUILDING	SV103	1
WIFIC2	2	4"	2	–	–	–	SV103	SV116	
WIFIC3	2	4"	2	–	–	–	SV116	SV115	
WIFIC4	1	4"	2	–	–	–	SV115	SV117	
WIFIC5	2	4"	2	–	–	–	SV115	SV114	
WIFIC6	1	4"	2	–	–	–	SV114	OUTGATE COMM. ROOM	
WIFIC7	2	4"	2	–	–	–	SV114	SV113	
WIFIC8	2	4"	2	–	–	–	SV113	SV104	
WIFIC9	2	4"	2	–	–	–	SV104	SV101	
WIFIC10	1	4"	2	–	–	–	SV101	MAINTENANCE BUILDING	
WIFIC11	2	4"	2	–	–	–	SV103	SV203	
WIFIC12	2	4"	2	–	–	–	SV203	SV204	
WIFIC13	2	4"	2	–	–	–	SV204	SV136	
WIFIC14	1	2"	2	–	–	–	SV136	WIFI MONO POLE	
WIFIC15	1	4"	2	–	–	–	SV136	SV135	
WIFIC16	1	4"	2	–	–	–	SV135	SV134	
WIFIC17	1	4"	2	–	–	–	SV134	SV132	
WIFIC18	1	4"	2	–	–	–	SV132	SV129	
WIFIC19	1	4"	2	–	–	–	SV129	EXISTING T3 MARINE BUILDING	
WIFIC20	1	2"	2	–	–	–	SV117	EXISTING YL25 WIFI ANTENNA AP-1	
WIFIC21	1	4"	2	–	–	–	SV103	SV110	
WIFIC22	1	4"	2	–	–	–	SV110	SV109	
WIFIC23	1	2"	2	–	–	–	SV109	WIFI ANTENNA AP-2	
WIFIC24	1	4"	2	–	–	–	SV109	SV108	
WIFIC25	1	4"	2	–	–	–	SV108	SV119	
WIFIC26	1	4"	2	–	–	–	SV119	~~SV118~~	4
~~WIFIC27~~	~~1~~	~~4"~~	~~2~~	~~–~~	~~–~~	~~–~~	~~SV118~~	~~SV201~~	
WIFIC28	1	4"	2	–	–	–	SV201	SV202	4
WIFIC29	1	4"	2	–	–	–	SV202	T4 MARINE BUILDING	1
WIFIP1	1	2"	2 3	2/1	6/10	XHHW-2	PANEL 4G	PV114	
WIFIP2	1	4"	2 3	2/1	6/10	XHHW-2	PV114	PV115	
WIFIP3	1	4"	2 3	2/1	6/10	XHHW-2	PV115	PV119	
WIFIP4	1	2"	2 3	2/1	6/10	XHHW-2	PANEL 4BR	PV122	
WIFIP5	1	4"	2 3	2/1	6/10	XHHW-2	PV122	PV123	
WIFIP6	1	4"	2 3	2/1	6/10	XHHW-2	PV123	PV124	
WIFIP7	1	4"	2 3	2/1	6/10	XHHW-2	PV124	PV125	
WIFIP8	1	4"	2 3	2/1	6/10	XHHW-2	PV122	PV121	
WIFIP9	1	4"	2 3	2/1	6/10	XHHW-2	PV121	PV120	
WIFIP10	1	2"	2 3	~~2/1~~	~~6/6~~	~~XHHW-2~~	PANEL 2WA	~~PV203~~	4
~~WIFIP11~~	~~1~~	~~4"~~	~~2 3~~	~~2/1~~	~~6/6~~	~~XHHW-2~~	~~PV203~~	~~PV118~~	
WIFIP12	1	4"	2 3	~~2/1~~	~~6/10~~	~~XHHW-2~~	~~PV118~~	PV119	4
WIFIP13	1	4"	2 3	2/1	6/10	XHHW-2	PV119	PV108	
WIFIP14	1	4"	2 3	2/1	6/10	XHHW-2	PV108	PV109	
WIFIP15	**1**	**1"**	**3**	**2/1**	**6/8**	**XHHW-2**	**PANEL 4WA**	**PULLBOX T1**	**MPZ ON WOOD POLE**
WIFIP16	**1**	**1"**	**3**	**2/1**	**6/8**	**XHHW-2**	**PULLBOX T1**	**PULLBOX T2**	
WIFIP17	**1**	**1"**	**3**	**2/1**	**6/8**	**XHHW-2**	**PULLBOX T2**	**PULLBOX T3**	
WIFIP18	**1**	**2"**	**2 3**	**2/1**	**6/8**	**XHHW-2**	**PULLBOX T3**	**PV119**	

GENERAL NOTES

1. SEE DRAWING E6.1 FOR LEGEND AND GENERAL NOTES.

SCHEDULE KEY NOTES

1. SEE SEPARATE HUSKY TERMINAL WIFI SYSTEM PROJECT DRAWINGS FOR COMMUNICATIONS CONDUCTORS AND SITE PLANS. PORT OF TACOMA JOB #6323-04.
2. PVC SHCEDULE 80.
3. GRS CONDUIT.
4. CONDUIT(S) CUT. ABANDONED IN PLACE.
5. COORDINATE WORK WITH TACOMA POWER.
6. PROVIDE LIQUID TIGHT FLEXIBLE METAL CONDUIT AT ALL LIGHT POLE LOCATIONS.
7. LIQUID TIGHT FLEXIBLE METAL CONDUIT.

Port of Tacoma
P.O. BOX 1837 TACOMA, WA 98401 (253)383-5841

ELCON ASSOCIATES, INC
ENGINEERS - CONSULTANTS
16300 CHRISTENSEN ROAD, SUITE 330
SEATTLE, WASHINGTON 98188
TEL (206) 241-7522
FAX (206) 243-6205

MARK:	REVISION:	BY:	APPR:	DATE:

DIMITRIOS K. SIMPERIS, STATE OF WASHINGTON, REGISTERED PROFESSIONAL ENGINEER, 22791

2/5/15

APPROVED: 2-6-15
DIRECTOR ENG. DATE

SAB	2/5/15	CHECKED BY	DATE
HAS	2/5/15	PROJ. ENGR	DATE

PRINTED BY: Curtis Feb 05, 2015
PORT ADDRESS: ONE SITCUM PLAZA
TACOMA, WA 98401-1837

PIER 4 PHASE 1
REMOVAL ACTION PROJECT
CONDUIT AND CONDUCTOR SCHEDULE

E6.2
SH 52 OF 54

CONT/CONS:	069982	TOWNSHIP:	21N	RANGE:	3E
M. ID:	091452	DAT-HRZ:	WA83-SF	VERT:	MLLW 19.39' @ Tide 22 1933
PHASE:	BID	PARCEL:		DRAWING SCALE:	AS NOTED

SECTION: 27

BINDING EDGE

CONDUIT AND CONDUCTOR SCHEDULE

CONDUIT NUMBER	CONDUIT NO.	CONDUIT SIZE	CONDUIT TYPE	CONDUCTOR NO.	CONDUCTOR SIZE	CONDUCTOR TYPE	FROM	TO	REMARKS
SD1	1	2.5"	②③	3/1	0000/6	XHHW-2	PANEL 4WA	VAULT PV106	
SD2	1	2.5"	②③	3/1	0000/6	XHHW-2	VAULT PV106	PANEL 4MA	
SD3	1	4"	②③	4	600	XHHW-2	SUBSTATION #4 SWBD #1	PV102	
SD4	1	4"	②	4	600	XHHW-2	PV102	PV103	
SD5	1	4"	②	4	600	XHHW-2	PV103	PV104	
SD6	1	4"	②	4	600	XHHW-2	PV104	PV113	
SD7	1	4"	②	4	600	XHHW-2	PV113	PV114	
SD8	1	4"	②	4	600	XHHW-2	PV114	PANEL 4G	
SD9	1	4"	②③	4	250	XHHW-2	SUBSTATION #4 SWBD #1	PV101	
SD10	1	4"	②	4	250	XHHW-2	PV101	PANEL 4M	
SD11	1	.75"	③	2/1	10/12	XHHW-2	PANEL 4G	OG LIGHTING PANEL	HEATER
SD12	1	2"	②③	3/1	4/8	XHHW-2	PANEL 4BR	PV122	
SD13	1	2"	②	3/1	4/8	XHHW-2	PV122	PV121	
SD14	1	2"	②	3/1	4/8	XHHW-2	PV121	PV120	
SD15	1	2"	②	3/1	4/8	XHHW-2	PV120	SEWAGE LIFT STATION	
SD16	1	2"	②③	3/1	0000/8	XHHW-2	PANEL 4WA	PV203	④
SD17	–	–	–	–	–	–	–	–	NOT USED
SD18	1	2"	②	3/1	0000/8	XHHW-2	PV203	PV205	
SD19	1	2"	②	3/1	0000/8	XHHW-2	PV205	PV206	
SD20	1	2"	②	3/1	0000/8	XHHW-2	PV206	PV207	
SD21	1	2"	②③	2/1	8/8	XHHW-2	PANEL 2GA	PV114	
SD22	1	2"	②	2/1	8/8	XHHW-2	PV114	PV115	
SD23	1	2"	②	2/1	8/8	XHHW-2	PV115	PV117	
SD24	1	2"	②③	2/1	8/8	XHHW-2	PV117	POLE YL25	
SD25	1	2"	②③	2/1	6/6	XHHW-2	PANEL 2WA	PV203	④
SD26	1	4"	②	2/1	6/6	XHHW-2	PV203	PV118	
SD27	1	2"	②③	2/1	8/6	XHHW-2	PV118	SECURITY CAMERA POLE	
SD28	1	1"	②③	2/1	8/8	XHHW-2	PANEL 2BR	PV122	
SD29	1	1"	②	2/1	8/8	XHHW-2	PV122	PV123	
SD30	1	1"	②	2/1	8/8	XHHW-2	PV123	PV124	
SD31	1	1"	②	2/1	8/8	XHHW-2	PV124	PV125	
SD32	1	1"	②	2/1	8/8	XHHW-2	PV125	PV126	
SD33	1	1"	②	2/1	8/8	XHHW-2	PV126	PV202	
SD34	1	1"	②③	2/1	8/8	XHHW-2	PV202	WHARF WATER VAULT	
SD35	5	1"	②③	3/1	8/8	XHHW-2	PANEL 2WA	PV203	
SD36	1	1"	②	3/1	8/8	XHHW-2	PV203	PV204	
SD37	4	1"	②	3/1	8/8	XHHW-2	PV203	PV205	
SD38	2	1"	②	3/1	8/8	XHHW-2	PV205	PV206	
SD39	1	1"	②	3/1	8/8	XHHW-2	PV206	PV207	
SD40	–	–	–	–	–	–	–	–	NOT USED
SD41	1	2"	②③	3/1	0/6	XHHW-2	PV207	BULKHAL CUTTER BY OTHERS	
SD42	1	2"	②③	3/1	0/6	XHHW-2	BULKHAL CUTTER BY OTHERS	EXISTING WHARF POWER VAULT #1	
SD43	1	2"	②③	3/1	0/6	XHHW-2	EXISTING WHARF POWER VAULT #1	EXISTING WHARF POWER VAULT #2	
SD44	1	2"	②③	3/1	0/6	XHHW-2	EXISTING WHARF POWER VAULT #2	EXISTING WHARF POWER VAULT #3	
SD45	1	2"	③	3/1	0/6	XHHW-2	EXISTING WHARF POWER VAULT #3	EXISTING WHARF POWER VAULT #4	

GENERAL NOTES

1. SEE DRAWING E6.1 FOR LEGEND AND GENERAL NOTES.

SCHEDULE KEY NOTES

① SEE SEPARATE HUSKY TERMINAL WIFI SYSTEM PROJECT DRAWINGS FOR COMMUNICATIONS CONDUCTORS AND SITE PLANS. PORT OF TACOMA JOB #6323-04.

② PVC SHCEDULE 80.

③ GRS CONDUIT.

④ CONDUIT(S) CUT. ABANDONED IN PLACE.

⑤ COORDINATE WORK WITH TACOMA POWER.

⑥ PROVIDE LIQUID TIGHT FLEXIBLE METAL CONDUIT AT ALL LIGHT POLE LOCATIONS.

⑦ LIQUID TIGHT FLEXIBLE METAL CONDUIT.

CONDUIT AND CONDUCTOR SCHEDULE

CONDUIT NUMBER	CONDUIT NO.	CONDUIT SIZE	CONDUIT TYPE	CONDUCTOR NO.	CONDUCTOR SIZE	CONDUCTOR TYPE	FROM	TO	REMARKS
SL1	4	2"	③	3/1	0/6	XHHW-2	PANEL 4G	LIGHTING CONTROL OG	
SL2	4	2"	②③	3/1	0/6	XHHW-2	LIGHTING CONTROL OG	PV114	
SL3	2	2"	②③	3/1	0/6	XHHW-2	PV114	PV113	
SL4	2	2"	②③	3/1	0/6	XHHW-2	PV113	POLE YL09	
SL5	2	2"	②③	3/1	0/6	XHHW-2	PV113	PV112	
SL6	2	2"	②③	3/1	0/6	XHHW-2	PV112	POLE YL08	
SL7	3	2"	②③	3/1	0/6	XHHW-2	PV114	PV115	
SL8	2	2"	②③	3/1	0/6	XHHW-2	PV115	POLE YL10	
SL9	2	2"	②③	3/1	0/6	XHHW-2	PV115	PV117	
SL10	1	2"	②③	3/1	0/6	XHHW-2	PV117	POLE YL25	
SL11	2	2"	②③	3/1	0/6	XHHW-2	PV115	PV116	
SL12	2	2"	②③	3/1	0/6	XHHW-2	PV116	POLE YL11	
SL13	2	2"	②③	3/1	0/6	XHHW-2	PV115	PV111	
SL14	2	2"	②③	3/1	0/6	XHHW-2	PV111	POLE YL07	
SL15	2	2"	②③	3/1	0/6	XHHW-2	PV111	PV110	
SL16	2	2"	②③	3/1	0/6	XHHW-2	PV110	POLE YL06	
SL17	2	2"	②③	3/1	0/6	XHHW-2	PV110	PV109	
SL18	2	2"	②③	3/1	0/6	XHHW-2	PV109	POLE YL05	
SL19	4	2"	②③	3/1	0/6	XHHW-2	PANEL 4BR	LIGHTING CONTROL PANEL	
SL20	4	2"	②	3/1	0/6	XHHW-2	LIGHTING CONTROL PANEL	PV122	
SL21	2	2"	②	3/1	0/6	XHHW-2	PV122	PV123	
SL22	2	2"	②	3/1	0/6	XHHW-2	PV123	POLE YL22	
SL23	2	2"	②	3/1	0/6	XHHW-2	PV123	PV124	
SL24	2	2"	②	3/1	0/6	XHHW-2	PV124	POLE YL23	
SL25	2	2"	②	3/1	0/6	XHHW-2	PV124	PV125	
SL26	2	2"	②	3/1	0/6	XHHW-2	PV125	POLE YL24	
SL27	2	2"	②	3/1	0/6	XHHW-2	PV122	PV121	
SL28	2	2"	②	3/1	0/6	XHHW-2	PV121	POLE YL19	
SL29	2	2"	②	3/1	0/6	XHHW-2	PV121	PV120	
SL30	2	2"	②	3/1	0/6	XHHW-2	PV120	POLE YL18	
SL31	2	2"	②	3/1	0/6	XHHW-2	PV122	PV121	
SL32	2	2"	③	3/1	0/6	XHHW-2	PV121	PV130	
SL33	2	2"	②	3/1	0/6	XHHW-2	PV130	POLE YL21	
SL34	2	2"	②	3/1	0/6	XHHW-2	PV130	PV131	
SL35	2	2"	②	3/1	0/6	XHHW-2	PV131	POLE YL20	
SL36	2	2"	②	3/1	0/6	XHHW-2	LIGHTING CONTROL PANEL	PV129	
SL37	2	2"	②	3/1	0/6	XHHW-2	PV129	PV128	
SL38	2	2"	②	3/1	0/6	XHHW-2	PV128	PV127	
SL39	2	2"	②	3/1	0/6	XHHW-2	PV127	POLE WYL10	
SL40	2	2"	②	3/1	0/6	XHHW-2	PV127	PV126	
SL41	2	2"	②	3/1	0/6	XHHW-2	PV126	POLE WYL11	
SL42	2	2"	②	3/1	0/6	XHHW-2	PV119	PV108	
SL43	2	2"	②	3/1	0/6	XHHW-2	PV108	POLE WYL01	
SL44	–	–	–	–	–	–	–	–	NOT USED
SL45	2	2"	②	3/1	0/6	XHHW-2	PV118	POLE WYL02	④
SL46	2	2"	②	3/1	0/6	XHHW-2	SUBSTATION #8418 LTG. CONT.	PV132	
SL47	–	–	–	–	–	–	–	–	NOT USED
SL48	2	2"	②	3/1	0/6	XHHW-2	PV133	POLE WYL09	
SL49	3	2"	②	3/1	0/6	XHHW-2	SUBSTATION #8418 LTG. CONT.	PV132	
SL50	3	2"	②	3/1	0/6	XHHW-2	PV132	PV134	
SL51	3	2"	②	3/1	0/6	XHHW-2	PV134	PV135	
SL52	2	2"	②	3/1	0/6	XHHW-2	PV135	POLE YL16	
SL53	2	2"	②	3/1	0/6	XHHW-2	PV135	PV136	
SL54	2	2"	②	3/1	0/6	XHHW-2	PV136	POLE YL17	
SL55	3	2"	②③	3/1	0/6	XHHW-2	SUB. #8410 LIGHTING CABINET	PV203	④
SL56	3	2"	②③	3/1	0/6	XHHW-2	SUB. #8410 LIGHTING CABINET	EXISTING 480V PULLBOX	
SL57	**1**	**2"**	**②③**	**6/1**	**0/6**	**XHHW-2**	**LIGHTING POLE WYL04**	**VAULT AT BENT 92**	**YARD & SECURITY LTG**
SL58	**1**	**1-1/2"**	**③**	**3/1**	**0/6**	**XHHW-2**	**LIGHTING CONTROL CABINET**	**PULLBOX T1**	**WHARF LTG**
SL59	**1**	**2"**	**③**	**6/1**	**0/6**	**XHHW-2**	**LIGHTING CONTROL CABINET**	**PULLBOX T1**	**YARD & SECURITY LTG**
SL60	**1**	**1-1/2"**	**③**	**3/1**	**0/6**	**XHHW-2**	**PULLBOX T1**	**PULLBOX T2**	**WHARF LTG**
SL61	**1**	**2"**	**③**	**6/1**	**0/6**	**XHHW-2**	**PULLBOX T1**	**PULLBOX T2**	**YARD & SECURITY LTG**
SL62	**1**	**2"**	**②③**	**3/1**	**0/6**	**XHHW-2**	**PULLBOX T2**	**LIGHTING POLE WYL02**	**WHARF LTG**
SL63	**1**	**2"**	**②③**	**6/1**	**0/6**	**XHHW-2**	**PULLBOX T2**	**LIGHTING POLE WYL02**	**YARD & SECURITY LTG**
SL64	**1**	**1-1/2"**	**③**	**3/1**	**0/6**	**XHHW-2**	**PULLBOX T2**	**PULLBOX T3**	**WHARF LTG**
SL65	**1**	**2"**	**③**	**6/1**	**0/6**	**XHHW-2**	**PULLBOX T2**	**PULLBOX T3**	**YARD & SECURITY LTG**
SL66	**1**	**2"**	**②③**	**3/1**	**0/6**	**XHHW-2**	**PULLBOX T3**	**PV119**	**WHARF LTG**
SL67	**1**	**2"**	**②③**	**6/1**	**0/6**	**XHHW-2**	**PULLBOX T3**	**PV119**	**YARD & SECURITY LTG**

Port of Tacoma
P.O. BOX 1837 TACOMA, WA 98401 (253)383-5841

ELCON ASSOCIATES, INC
ENGINEERS - CONSULTANTS
16300 CHRISTENSEN ROAD, SUITE 330
SEATTLE, WASHINGTON 98188
TEL (206) 243-8202
FAX (206) 243-8205

MARK:	REVISION:	BY:	APPR:	DATE:

DIMITRIOS K. SARTIKLIS, STATE OF WASHINGTON, 23359, REGISTERED PROFESSIONAL ENGINEER

2/5/15

PIER 4 PHASE 1
REMOVAL ACTION PROJECT
CONDUIT AND CONDUCTOR SCHEDULE

SAB	2/5/15	APPROVED:	
CHECKED BY	DATE	2-6-15	
HAS	2/5/15	DIRECTOR ENG.	DATE
PROJ. ENGR	DATE	PRINTED BY:	Curtis Feb 05, 2015
PORT ADDRESS:	ONE SITCUM PLAZA, TACOMA, WA 98401-1837		

E6.3
SH 53 OF 54

CONT/CONS:	069982	TOWNSHIP:	21N	RANGE:	3E
M. ID:	091452	DAT-HRZ:	WA83-SF	VERT:	MLLW 19.39' @ Tide 22 1933
PHASE:	BID	PARCEL:		DRAWING SCALE:	AS NOTED

SECTION: 27

CONDUIT AND CONDUCTOR SCHEDULE

CONDUIT NUMBER	CONDUIT NO.	CONDUIT SIZE	CONDUIT TYPE	CONDUCTOR NO.	CONDUCTOR SIZE	CONDUCTOR TYPE	FROM	TO	REMARKS
SP1	2	2.5"	(2)	–	–	–	RV2	RV1	
SP2	2	2.5"	(2)	–	–	–	RV1	SWITCHBOARD #8411	
SP3	1	4"	(2)(3)	–	–	–	EXTERIOR MAINT. BLDG.	SV101	SEE SHEET E1.04
SP4	2	4"	(2)	–	–	–	SV101	SV102	
SP5	4	4"	(2)	–	–	–	SV102	SV103	
SP6	4	4"	(2)	–	–	–	SV103	SV104	
SP7	4	4"	(2)	–	–	–	SV104	SV105	
SP8	4	4"	(2)	–	–	–	SV105	SV106	
SP9	2	4"	(2)(3)	–	–	–	SV106	NEW BLDG ADDITION	STUB 10' OUTSIDE BUILDING
SP10	3	2.5"	(2)(3)	–	–	–	PULLBOX (AT SUB. 8410)	VAULT PV106	
SP11	2	2.5"	(2)(3)	–	–	–	VAULT PV106	STUB & CAP AT MARINA BLDG. T4	
SP12	2	4"	(2)(3)	–	–	–	SUBSTATION #4 SWBD #1	PV102	
SP13	2	4"	(2)	–	–	–	PV102	PV103	
SP14	2	4"	(2)	–	–	–	PV103	PV104	
SP15	2	4"	(2)	–	–	–	PV104	PV113	
SP16	2	4"	(2)	–	–	–	PV113	PV114	
SP17	1	4"	(2)	–	–	–	PV114	PV115	
SP18	2	4"	(2)	–	–	–	PV115	PV116	
SP19	1	4"	(2)	–	–	–	PV115	PV117	
SP20	2	4"	(2)	–	–	–	PV113	PV112	
SP21	2	4"	(2)	–	–	–	PV112	~~PV118~~	(4)
SP22	1	4"	(2)	–	–	–	PV115	PV111	
SP23	2	4"	(2)	–	–	–	PV111	PV108	
SP24	2	4"	(2)	–	–	–	PV116	PV110	
SP25	1	2"	(3)	–	–	–	PANEL 4G	OG LIGHTING PANEL	
SP26	1	4"	(2)	–	–	–	SV110	PV109	
SP27	1	4"	(2)	–	–	–	PV109	PV108	
SP28	2	4"	(2)	–	–	–	SV104	SV113	
SP29	2	4"	(2)	–	–	–	SV113	SV114	
SP30	1	4"	(2)	–	–	–	SV114	OUT GATE RM. 102	
SP24	2	4"	(2)				PV116	PV110	
SP25	1	2"	(3)	–	–	–	PANEL 4G	OG LIGHTING PANEL	
SP26	2	4"	(2)	–	–	–	SV110	PV109	
SP27	2	4"	(2)	–	–	–	PV109	PV108	
SP28	4	4"	(2)	–	–	–	SV104	SV113	
SP29	4	4"	(2)	–	–	–	SV113	SV114	
SP30	2	4"	(2)	–	–	–	SV114	OUT GATE RM. 102	
SP31	2	4"	(2)	–	–	–	SV114	SV115	
SP32	2	4"	(2)	–	–	–	SV115	SV116	
SP33	3	4"	(2)	–	–	–	SV115	SV117	
SP34	4	4"	(2)	–	–	–	SV113	SV112	
SP35	4	4"	(2)	–	–	–	SV112	~~SV118~~	(4)
SP36	4	4"	(2)	–	–	–	SV115	SV111	
SP37	2	4"	(2)	–	–	–	SV111	SV103	
SP38	3	4"	(2)	–	–	–	SV103	SV110	
SP39	3	4"	(2)	–	–	–	SV110	SV109	
SP40	2	4"	(2)	–	–	–	SV109	SV108	
SP41	2	2"	(2)(3)	–	–	–	OG LIGHTING PANEL	PV114	
SP42	4	4"	(2)	–	–	–	SV110	SV111	
SP43	4	4"	(2)	–	–	–	SV111	SV112	
SP44	1	4"	(2)	–	–	–	PV110	PV111	
SP45	2	4"	(2)	–	–	–	PV111	PV112	
SP46	1	.75"	(2)(3)	–	–	–	REEFER MONITOR UNIT	PV122	
SP47	2	2"	(2)	–	–	–	LIGHTING CONTROL PANEL	PV122	
SP48	1	4"	(2)	–	–	–	PV122	PV123	
SP49	1	4"	(2)	–	–	–	PV123	PV124	
SP50	1	4"	(2)	–	–	–	PV124	PV125	
SP51	4	4"	(2)	–	–	–	SV122	SV123	
SP52	4	4"	(2)	–	–	–	SV123	SV124	
SP53	4	4"	(2)	–	–	–	SV124	SV125	
SP54	1	4"	(3)	–	–	–	PV122	PV121	
SP55	1	4"	(2)	–	–	–	PV121	PV120	
SP56	4	4"	(2)	–	–	–	SV122	SV121	
SP57	4	4"	(2)	–	–	–	SV121	SV120	
SP58	2	4"	(2)	–	–	–	PV121	PV130	
SP59	4	4"	(2)	–	–	–	SV121	SV130	

CONDUIT AND CONDUCTOR SCHEDULE

CONDUIT NUMBER	CONDUIT NO.	CONDUIT SIZE	CONDUIT TYPE	CONDUCTOR NO.	CONDUCTOR SIZE	CONDUCTOR TYPE	FROM	TO	REMARKS
SP60	2	4"	(2)	–	–	–	PV130	PV131	
SP61	4	4"	(2)	–	–	–	SV130	SV131	
SP62	4	4"	(2)	–	–	–	PV120	PV131	
SP63	4	4"	(2)	–	–	–	SV120	SV131	
SP64	4	4"	(2)	–	–	–	PV131	PV129	
SP65	4	4"	(2)	–	–	–	SV131	SV129	
SP66	4	4"	(2)	–	–	–	PV130	PV128	
SP67	4	4"	(2)	–	–	–	SV130	SV128	
SP68	4	4"	(2)	–	–	–	PV125	PV126	
SP69	4	4"	(2)	–	–	–	SV125	SV126	
SP70	2	4"	(2)	–	–	–	PV129	PV128	
SP71	4	4"	(2)	–	–	–	SV129	SV128	
SP72	2	4"	(2)	–	–	–	PV128	PV127	
SP73	4	4"	(2)	–	–	–	SV128	SV127	
SP74	2	4"	(2)	–	–	–	PV127	PV126	
SP75	4	4"	(2)	–	–	–	SV127	SV126	
SP76	5	1"	(2)(3)	–	–	–	PANEL 2WA	~~PV203~~	(4)
~~SP77~~	~~4~~	~~1"~~	~~(2)(3)~~	~~–~~	~~–~~	~~–~~	~~PV203~~	~~PV205~~	
SP78	1	2"	(2)(3)	–	–	–	PANEL 4WA	~~PV203~~	(4)
~~SP79~~	~~2~~	~~1"~~	~~(2)~~	~~–~~	~~–~~	~~–~~	~~PV205~~	~~PV206~~	
~~SP80~~	~~2~~	~~2"~~	~~(2)~~	~~–~~	~~–~~	~~–~~	~~PV205~~	~~PV206~~	
~~SP81~~	~~2~~	~~1"~~	~~(2)~~	~~–~~	~~–~~	~~–~~	~~PV206~~	~~PV207~~	
SP82	1	4"	(2)	–	–	–	PV108	PV119	
SP83	2	4"	(2)	–	–	–	SV108	SV119	
SP84	1	4"	(2)	–	–	–	PV119	~~PV118~~	(4)
SP85	2	4"	(2)	–	–	–	SV119	~~SV118~~	(4)
~~SP86~~	~~1~~	~~4"~~	~~(2)~~	~~–~~	~~–~~	~~–~~	~~SV118~~	~~SV201~~	
SP87	2	4"	(2)	–	–	–	SV201	SV202	(4)
SP88	2	4"	(2)(3)	–	–	–	SV202	MARINE BUILDING T4	
SP89	2	1"	(2)	–	–	–	PV203	PV204	
SP90	2	2"	(2)(3)	–	–	–	SUBSTATION #8427, SWBD #1	PV101	
SP91	3	4"	(2)	–	–	–	SV129	SV132	
SP92	–	–	–	–	–	–	–	–	NOT USED
SP93	–	–	–	–	–	–	–	–	NOT USED
SP94	2	4"	(2)	–	–	–	PV132	PV133	
SP95	3	4"	(2)	–	–	–	SV132	SV134	
SP96	3	4"	(2)	–	–	–	SV134	SV135	
SP97	3	4"	(2)	–	–	–	SV135	SV136	
SP98	2	4"	(2)	–	–	–	SV136	SV204	
SP99	2	4"	(2)	–	–	–	SV204	SV203	
SP100	2	4"	(2)	–	–	–	SV203	SV101	
SP101	2	4"	(2)	–	–	–	(E)P.O.T TELE. VAULT	SV113	
SP102	1	2"	(2)(3)	–	–	–	SV117	POLE YL25 (NEMA 4X ENCLOSURE)	
SP103	1	2"	(2)(3)	2/1	6/10	XHHW-2	PV117	POLE YL25 (MINI UNIT SUB)	
SP104	1	2"	(2)(3)	–	–	–	SV109	NEW WOOD POLE (NEMA 4X ENCLOSURE)	
SP105	1	2"	(2)(3)	2/1	6/10	XHHW-2	PV109	NEW WOOD POLE (MINI UNIT SUB)	
SP106	2	2"	(2)(3)	–	–	–	SV120	NEW WOOD POLE (NEMA 4X ENCLOSURE)	
SP107	1	2"	(2)(3)	2/1	6/10	XHHW-2	PV120	NEW WOOD POLE (MINI UNIT SUB)	
SP108	1	2"	(2)(3)	–	–	–	SV136	NEW MONOPOLE (NEMA 4X ENCLOSURE)	
SP109	1	2"	(2)(3)	2/1	6/10	XHHW-2	PV136	NEW MONOPOLE (MINI UNIT SUB)	
SP110	1	4"	(2)(3)	–	–	–	SV129	EXISTING T3 WHARF BUILDING	
SP111	2	2"	(2)(3)	–	–	–	SV125	NEW WOOD POLE (NEMA 4X ENCLOSURE)	
SP112	1	2"	(2)(3)	2/1	6/10	XHHW-2	PV125	NEW WOOD POLE (MINI UNIT SUB)	
SP113	2	2"	(2)(3)	–	–	–	SV123	NEW WOOD POLE (NEMA 4X ENCLOSURE)	
SP114	1	2"	(2)(3)	2/1	6/10	XHHW-2	PV123	NEW WOOD POLE (MINI UNIT SUB)	

GENERAL NOTES

1. SEE DRAWING E6.1 FOR LEGEND AND GENERAL NOTES.

SCHEDULE KEY NOTES

(1) SEE SEPARATE HUSKY TERMINAL WIFI SYSTEM PROJECT DRAWINGS FOR COMMUNICATIONS CONDUCTORS AND SITE PLANS. PORT OF TACOMA JOB #6323-04.

(2) PVC SHCEDULE 80.

(3) GRS CONDUIT.

(4) CONDUIT(S) CUT. ABANDONED IN PLACE.

(5) COORDINATE WORK WITH TACOMA POWER.

(6) PROVIDE LIQUID TIGHT FLEXIBLE METAL CONDUIT AT ALL LIGHT POLE LOCATIONS.

(7) LIQUID TIGHT FLEXIBLE METAL CONDUIT.

Port of Tacoma
P.O. BOX 1837 TACOMA, WA 98401 (253)383-5841

ELCON ASSOCIATES, INC
ENGINEERS - CONSULTANTS
16300 CHRISTENSEN ROAD, SUITE 330
SEATTLE, WASHINGTON 98188
TEL (206) 241-5200
FAX (206) 243-5205

MARK: REVISION: BY: APPR: DATE:

DIMITRIOS K. SIMATOS, STATE OF WASHINGTON, 38275, REGISTERED PROFESSIONAL ENGINEER

SAB 2/5/15
CHECKED BY DATE
HAS 2/5/15
PROJ. ENGR DATE
Feb 05, 2015
PRINTED BY: Curtis
APPROVED: 2-6-15
DIRECTOR ENG. DATE

PIER 4 PHASE 1
REMOVAL ACTION PROJECT
CONDUIT AND CONDUCTOR SCHEDULE

E6.4

SH 54 OF 54

CONT/CONS: 069982 | TOWNSHIP: 21N | RANGE: 3E | SECTION: 27
M. ID: 091452 | DAT-HRZ: WA83-SF | VERT: MLLW 19.39' @ Tide 22 1933
PORT ADDRESS: ONE SITCUM PLAZA, TACOMA, WA 98401-1837
PHASE: BID | PARCEL: | DRAWING SCALE: AS NOTED